EN

ISOTRA®

TECHNICAL MANUAL

ARTOSI BIOCLIMATIC PERGOLA

Contents

ARTOSI	**3**
Basic specification	4
Technical specification	9
Optional accessories	21
ARTOSI GLASS	**25**
Sliding Frame Glazing System	**26**
Basic product specification	27
Possible versions	29
Installation	34
Sliding Frameless Glazing System	**37**
Basic product specification	38
Possible versions	40
Installation	48
Measurement and assembly manual for the sliding glazing systems	49
ARTOSI SLIDE PANELS	**62**
Basic specification	63
Technical specification	66
Possible versions	79
SCREEN ALFA, ALFA PLUS with ARTOSI SLIDE PANELS	**83**
Measurement and assembly	85

Products in this assortment group are always measured from the exterior.

Due to continuous development of our products, we reserve the right to slight differences in design from the illustrations.

ISOTRA *Quality*

A brand that represents many years of tradition, incalculable investments into own development, use of high-quality materials, technological advancement, competent work of hundreds of employees, and many other parameters constituting a composite whole – the final ISOTRA product.

ARTOSI

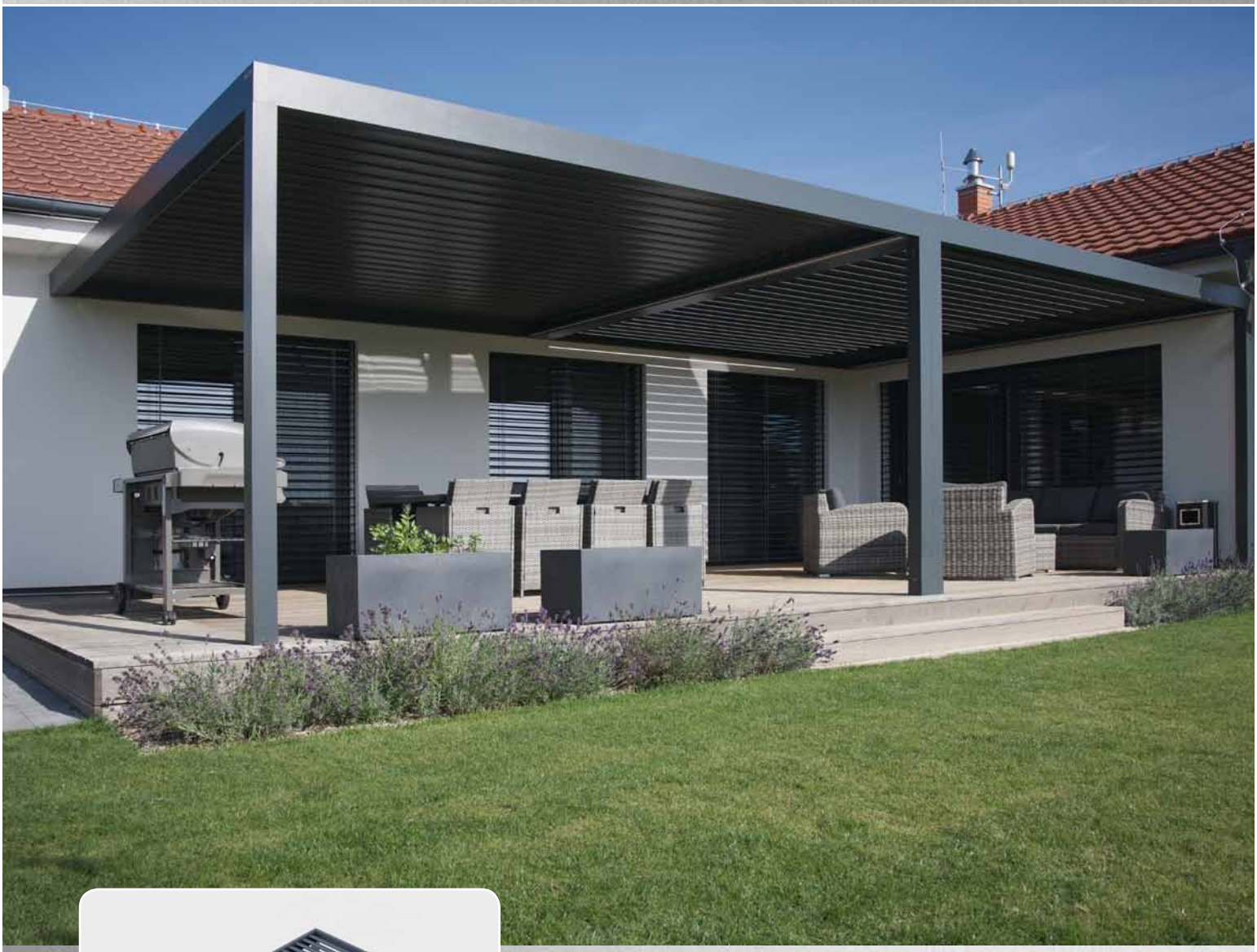

- The bioclimatic pergola is manufactured with high precision
- Possibility to place the poles outside the pergola corners
- Low building height of the roof section incl. slat opening – 25 cm in total
- Possibility to divide the pergola roof slats into several independent sections with individual control
- Pure and elegant design
- Simple slat assembly/disassembly and variability of pergola assembly
- Slat opening angle up to 130°
- Slat weathering 16 mm
- Possibility to install a LED strip along the pergola perimeter, with a shade of day white or alternative solution is installation of spot lights, which are integrated into the slats.
- Possibility to integrate screen shutters, or sliding glass panels
- Wind resistance class 6
- Own development and manufacture

ISOTRA *Quality*

ARTOSI
Basic specification

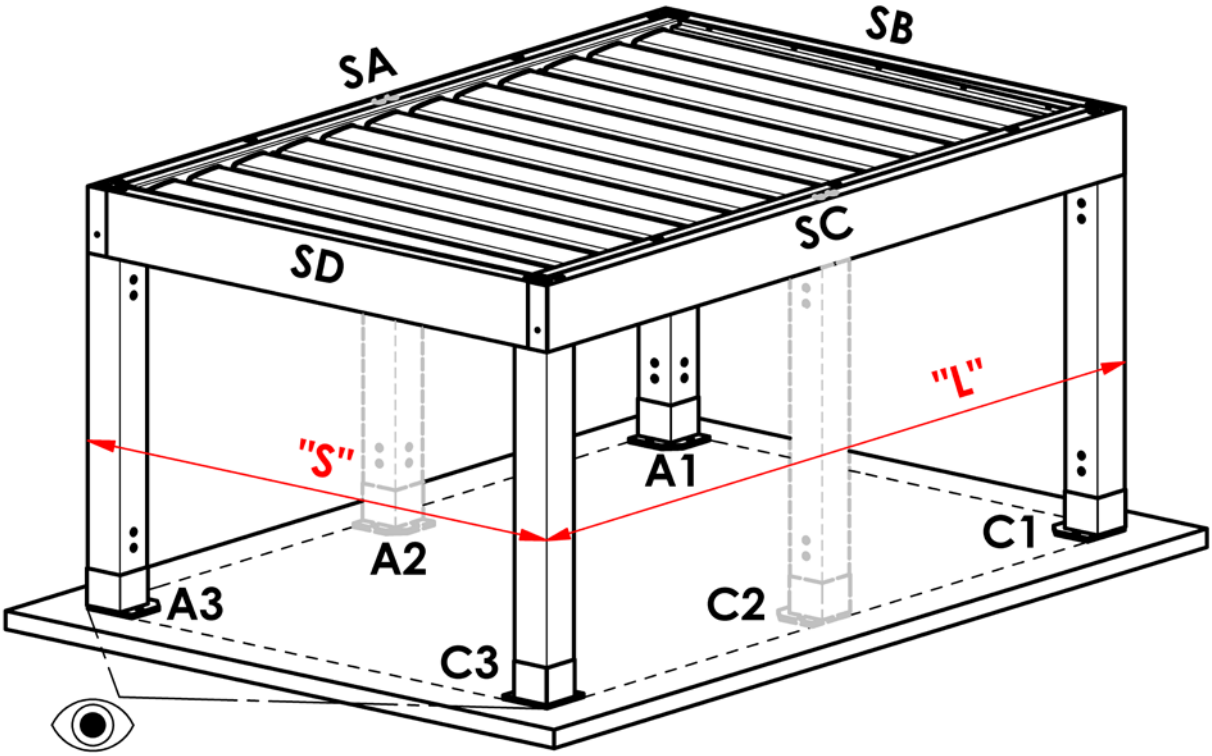

SA, SC – Perimeter frame – Length
SB, SD – Perimeter frame – Width
A1, A3, C1, C3 – Corner poles
A2, C2 – Additional pole

"S" – Maximum pergola width
"L" – Maximum pergola length

- Viewing direction

Colours

RAL 9006 White aluminium
RAL 9006S White aluminium structure
RAL 9007 Grey aluminium
RAL 9007S Grey aluminium structure
RAL 9010M Pure white matt
RAL 9010S Pure white structure
RAL 7016M Anthracite grey matt
RAL 7016S Anthracite grey structure
RAL 8014M Sepia brown matt
RAL 8014S Sepia brown structure
DB 702 pearl light grey
DB 703 pearl dark grey

Other RAL colours upon request for an extra charge.

Double-sided painting of the slats
- 2 basic colours of the slats RAL 7016 S and RAL DB703 S
- Combination option with RAL 9010 S, RAL 9016 S, RAL 9006 S, RAL 9007 S

Upper part	Lower part
7016 S	9010 S
7016 S	9016 S
7016 S	9006 S
7016 S	9007 S
DB703 S	9010 S
DB703 S	9016 S
DB703 S	9006 S
DB703 S	9007 S

If the slat is two-coloured, the colour of the side profiles is the same as the colour of the lower part of the slat.

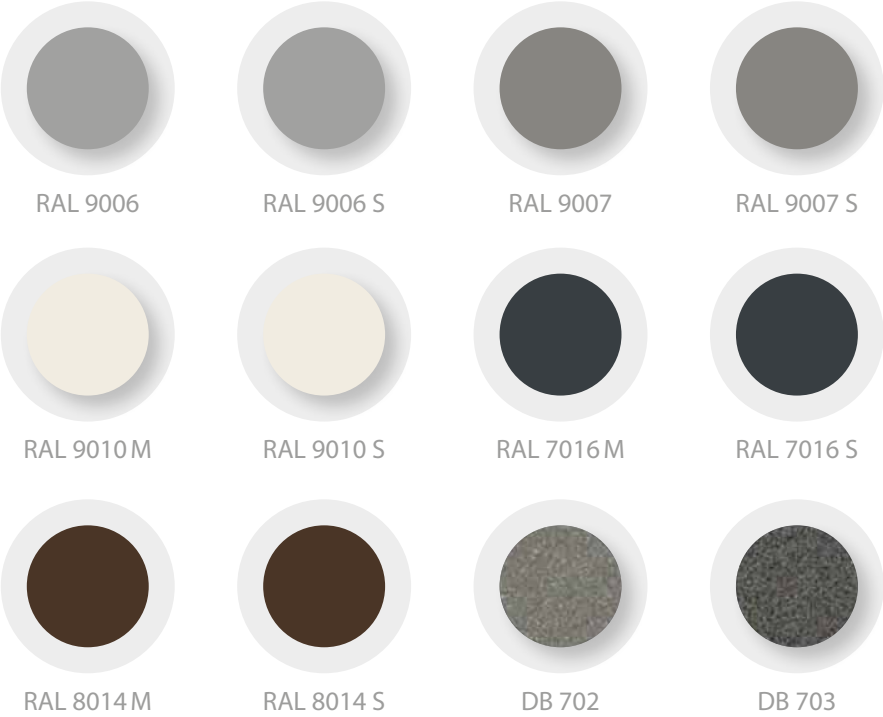

Function of the bioclimatic pergola

Sun protection | Sun protection and cooling | Rain protection

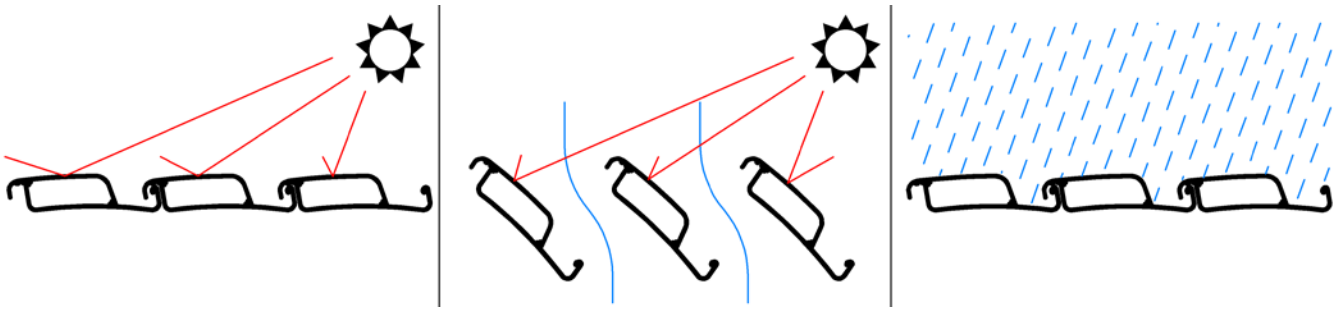

The bioclimatic pergola is a shading element intended as sun protection. Slat tilting allows ventilating the space under the roof while retaining the shading function. The pergola also serves as rain protection. However, water-resistance is limited due to the product design. Detailed information can be found in the section Basic specification – Water resistance.

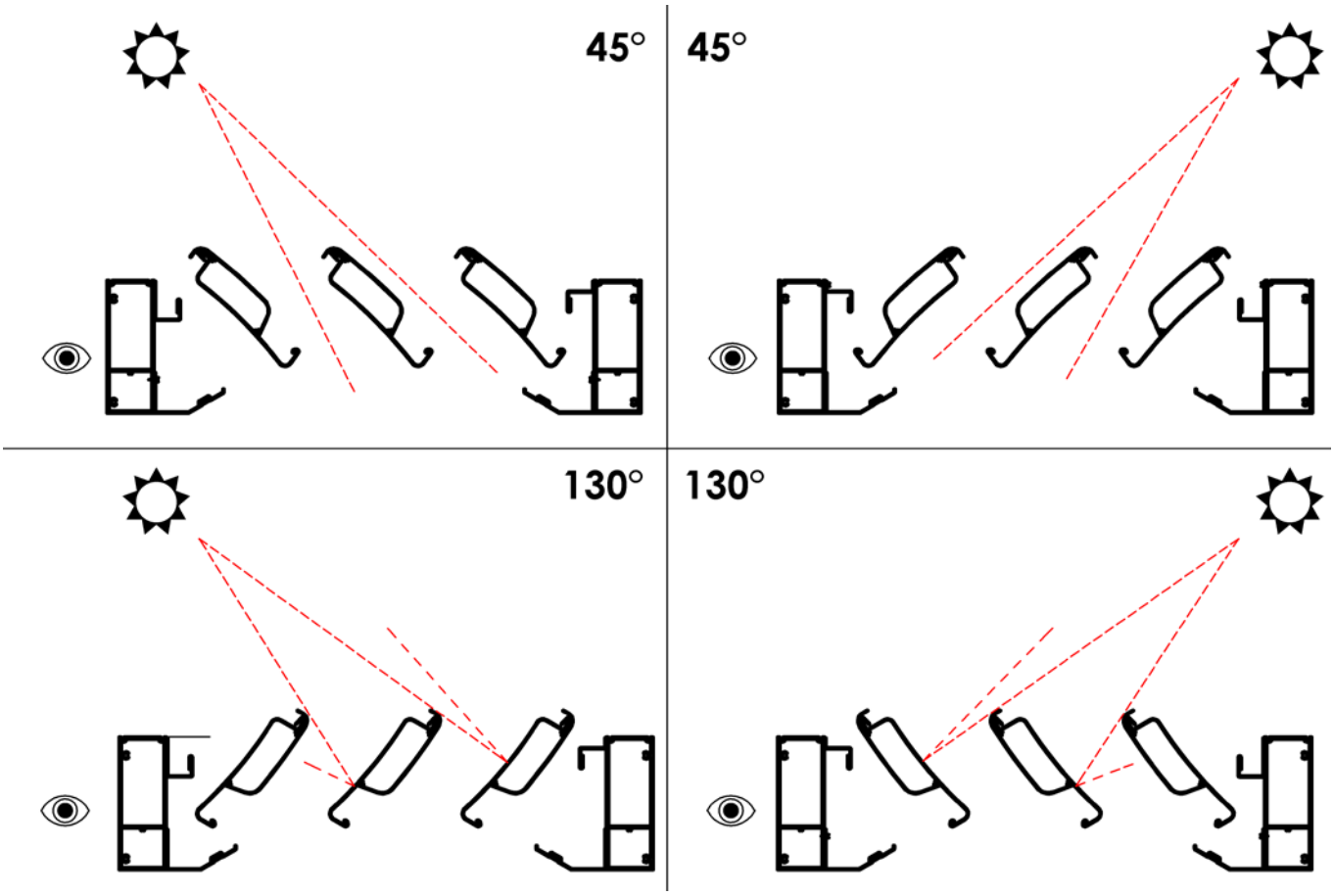

Controls / Slat drive

Motorised control, tilting and shutting of aluminium slats in the pergola roof.
230 V, 50 Hz

The controls can be wired – phase control – or wireless using the SOMFY IO system.

SOMFY motor: If a remote control is ordered for the ARTOSI pergola (as an optional accessory), the remote control will be paired.

LINEAR motor: If a remote control is ordered for the ARTOSI pergola (as an optional accessory), the remote control **will not** be paired. The remote control is paired when the unit is started.

Definition

The Artosi pergola is a shelter with rotating slats that allow ventilation and shading at the same time. It is an element of shading technology in the first place. When turning slats to the closed position, they completely close on each other and create coherent surface.

The Artosi pergola is an open exterior structure and is not comparable to any closed structures, it is not completely impervious to heat, water and wind. This fact must be taken into account in particular when supplementing sides of the pergola with screen roller shutters or slide panels. All equipment placed under the pergola must be suitable for exterior use.

Depending on local conditions, such pergolas may be considered a building and in such cases it is necessary to follow local laws and regulations for such constructions.

The manufacturer is not responsible for inappropriate placement or inappropriate configuration of the pergola for a given location.

The manufacturer is not responsible for the consequences associated with incorporation into other building elements.

Water resistance

The pergola slats have a slight slant and each slat is equipped with a sealing element along its entire length.

The pergola is equipped with a full-perimeter gutter. Water drains are designed in the pergola stands.

The pergola is able to drain the amount of water corresponding to the intensity of rain, see table, provided all drains are located on the gradient side of the roof.

Pergola area [m²]	Number of drains [pcs]	Amount of water drained [liter / m² / hour]
12	1	50
24	2	50
31,5	3	70

The pergola is an open exterior structure and is not completely waterproof.

During rain, individual drops of water falling into the gutter can splash into the space under the pergola (it always depends on the current intensity of rain and given weather conditions).

It should be noted that with higher intensity of rain, the gutter, which is located on the inside of the pergola, may overflow.

Due to different temperatures above and below the pergola, water can condense on the underside and in the structure in cold weather.

If the pergola is placed in close proximity to neighbouring buildings, water may penetrate between the pergola and the neighbouring building. Sealing for this joint is not a part of the product. The manufacturer is therefore not responsible for the method and execution of this sealing.

When used in salty environments and under intense exposure to salt mist or chemical vapours (e.g. swimming pools, hot tubs), incrustations or bubbles may appear on the surface or joints of the aluminium profiles, as well as possible surface oxidation on stainless steel parts of the pergola.

Wind resistance

The pergola in the closed state can withstand winds greater than the highest class 6 according to ČSN 13561 (more than 88km/h).

The pergola in the open state can withstand winds of 40km/h.

The carport is an open exterior structure and is not completely windproof.

Snow resistance

Snow load capacity 116 kg/m², for width up to 4000mm (inclusive)

Snow load capacity 90 kg/m², for width over 4000mm

Calculation performed according to ČSN EN 1991–1-3

During snowfall, the slats must be opened in the 90° position.

In case of ice, it is forbidden to move the slats, as this may damage the product.

Beware of possible drifts or falling snow on the pergola from surrounding buildings.

In the event of local roof overloading, the warranty may not be recognized.

The pergola is an open exterior structure and is not completely snowproof.

Standard dimensions

Pergola	Version	Length "L"		Width "S" (mm)		Passing height Dimension "H" (mm)		Guaranteed surface (m^2)
		min.	max.	min.	max.	min.	max.	max.
ARTOSI	**motor**	1440	7000*	1000	4500**	500	3000	31,5

*From a length of 6120 mm, the pergola has 6 stands. From a length of 5400 mm, the pergola must be divided into 2 sections (2 motors).
** Up to a width of 4000 mm, the load capacity of the slats is up to 116 kg / m2. From a width of 4000 mm, the load capacity of the slats is up to 90 kg / m^2.

Installation dimensions

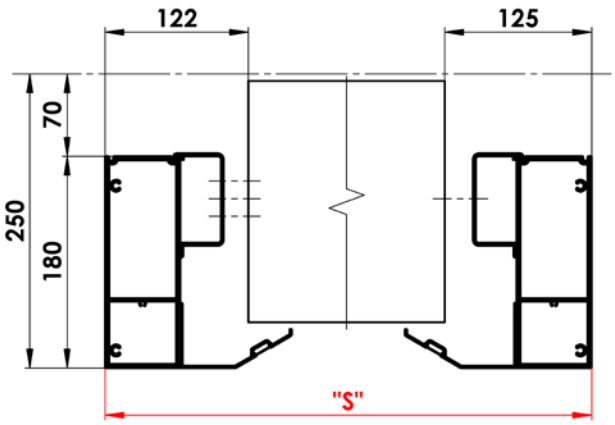

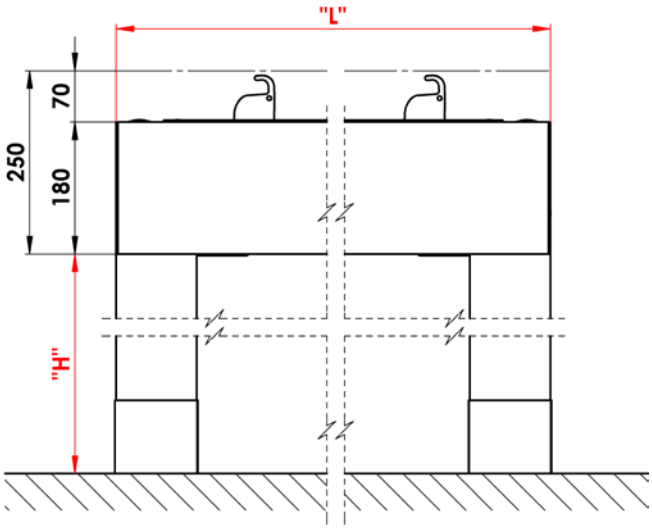

"S" – Pergola width
"L" – Pergola length
"H" – Passing height of a specific pole

Linear expansion

When the temperature of aluminium increases, the metal will expand; this phenomenon is called thermal expansion. The coefficient of thermal expansion of aluminium alloy is 23.5 µm/(m*K).
Example:
At 20 °C, an aluminium profile measures 7000 mm. When heated to 50 °C – during a sunny day – it will measure 7005 mm due to thermal expansion. The length will increase by +5 mm as a result of the change in aluminium temperature.
When incorporating the pergola to surrounding structures, it is important to consider change in the pergola dimensions due to ambient temperature.
When taking measurements of screen roller blinds and installing them in the pergola, it is necessary to consider thermal expansion of the aluminium profile in relation to ambient temperature. We recommend that measurements be taken at ambient temperatures of 23 ±5 °C.

Dimensional tolerances

Length	Tolerance	Width	Tolerance	Passing height	Tolerance
up to 2000 mm	± 2,4	up to 2000 mm	± 2,4	from 500 mm to 3000 mm	+20/-10 - adjustable
up to 3000 mm	± 2,6	up to 3000 mm	± 2,6		
up to 4000 mm	± 2,8	up to 4000 mm	± 2,8		
up to 5000 mm	± 3	up to 4500 mm	± 3		
up to 6000 mm	± 3,2				
up to 7000 mm	± 3,4				

Number of slats over pergola length

L	1440	1620	1800	1980	2160	2340	2520	2700	2880	3060	3240	3420	3600	3780	3960	4140
ks	7	8	9	10	11	12	13	14	15	16	17	18	19	20	21	22
L	4320	4500	4680	4860	5040	5220	5400	5580	5760	5940	6120	6300	6480	6660	6840	7000
ks	23	24	25	26	27	28	29	30	31	32	33	34	35	36	37	37

Approximate pergola weight [kg]

L/S	2000	2500	3000	3500	4000	4500
1440	123	139	155	171	188	204
1620	131	148	166	183	201	218
1800	139	158	176	195	214	232
1980	147	167	187	207	227	247
2160	155	176	197	219	240	261
2340	163	186	208	230	253	275
2520	172	195	219	242	266	289
2700	180	204	229	254	279	303
2880	188	214	240	266	292	318
3060	196	223	250	277	305	332
3240	204	233	261	289	318	346
3420	212	242	271	301	331	360
3600	221	251	282	313	343	374
3780	229	261	293	325	356	388
3960	237	270	303	336	369	403
4140	245	279	314	348	382	417
4320	253	289	324	360	395	431
4500	261	298	335	372	408	445
4680	270	308	345	383	421	459
4860	278	317	356	395	434	473
5040	286	326	367	407	447	488
5220	294	336	377	419	460	502
5400	302	345	388	430	473	516
5580	311	354	398	442	486	530
5760	319	364	409	454	499	544
5940	327	373	419	466	512	558
6120	335	383	430	478	525	573
6300	343	392	441	489	538	587
6480	351	401	451	501	551	601
6660	360	411	462	513	564	615
6840	368	420	472	525	577	629
7000	376	429	483	536	590	643

ARTOSI
Technical specification

Types of installation
Three types of installation may be selected for ARTOSI pergolas. Each type of installation is suitable for a different installation area. All types of installation are intended for step-by-step assembly (it is not necessary to assemble the frame in advance and then lift it by hoists).

Type A

Installation possibilities
- Free-standing, supported by 4 to 6 poles
- Possibility of anchoring to the adjacent building using the SA/SC perimeter frame, without having to use poles at the anchored side
- The SA and SC sides may be built up
- Handling area of at least 700 mm must be allowed in front of SB and SD sides

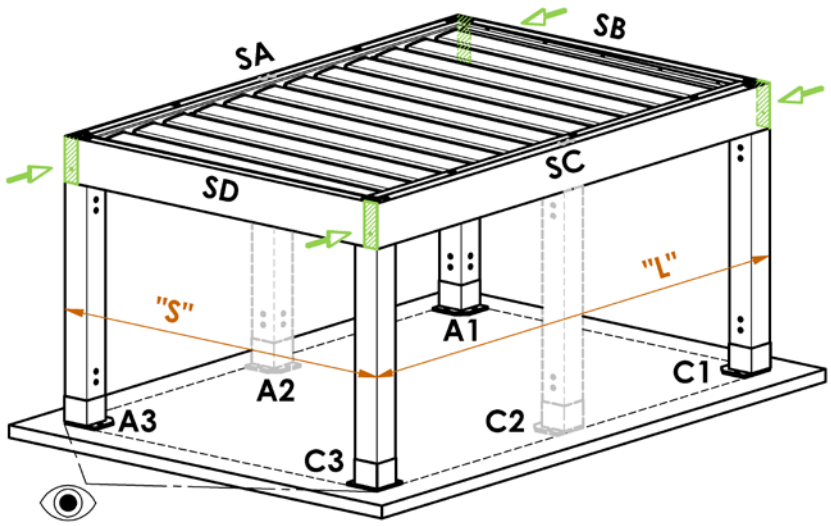

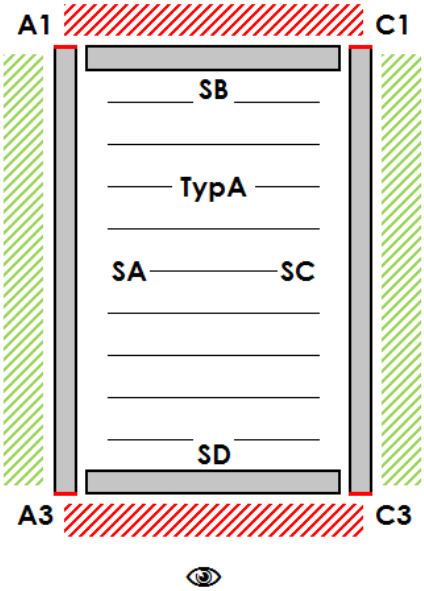

SA, SC – Perimeter frame – Length
SB, SD – Perimeter frame – Width
A1, A3, C1, C3 – Corner poles
A2, C2 – Additional poles

"S" – Maximum pergola width
"L" – Maximum pergola lengt

- Viewing direction

Examples of installation possibilities for Type A pergola with regard to the surroundings

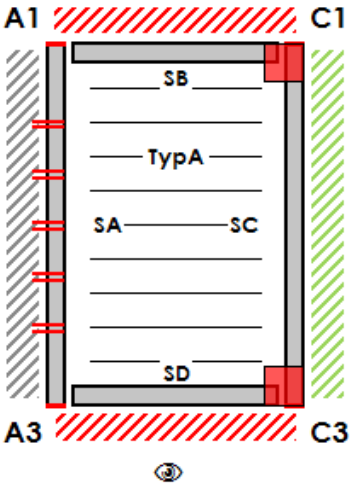

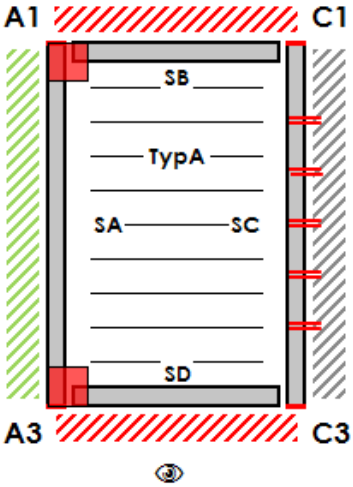

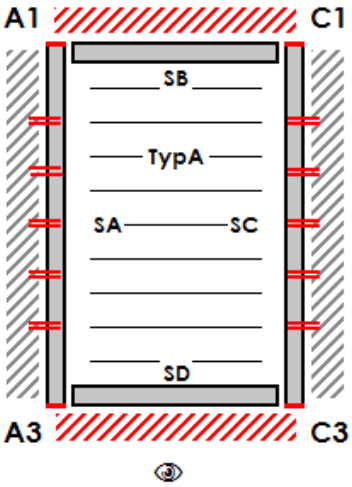

- Anchored side: SA
- Compulsory pole: C1 / C3
- Optional pole: A1 / A2 / A3 / C2

- Anchored side: SC
- Compulsory pole: A1 / A3
- Optional pole: A2 / C1 / C2 / C3

- Anchored side: SA / SC
- Compulsory pole: -
- Optional pole: A1 / A2 / A3 / C1 / C2 / C3

Type B

Installation possibilities

- Free-standing, supported by 4 to 6 poles
- Possibility of anchoring to the adjacent building using the SA/SB/SC perimeter frame, without having to use poles at the anchored side
- The SA/SB/SC sides may be built up
- Handling area of at least 700 mm must be allowed in front of SD side

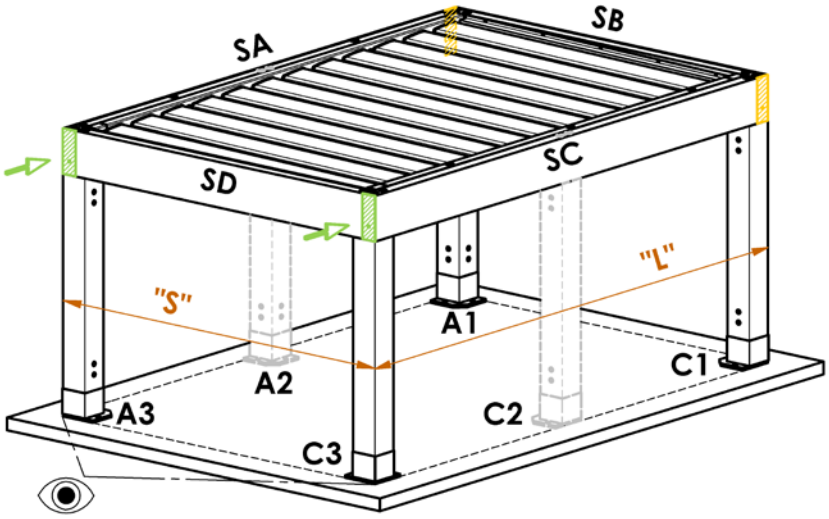

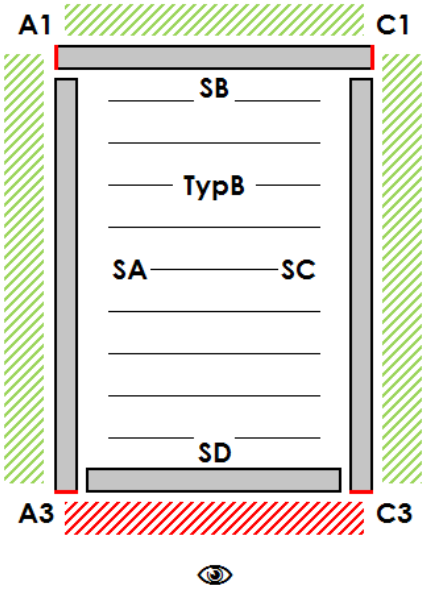

SA, SC – Perimeter frame – Length
SB, SD – Perimeter frame – Width
A1, A3, C1, C3 – Corner poles
A2, C2 – Additional poles

"S" – Maximum pergola width
"L" – Maximum pergola length

- Viewing direction

Examples of installation possibilities for Type B pergola with regard to the surroundings

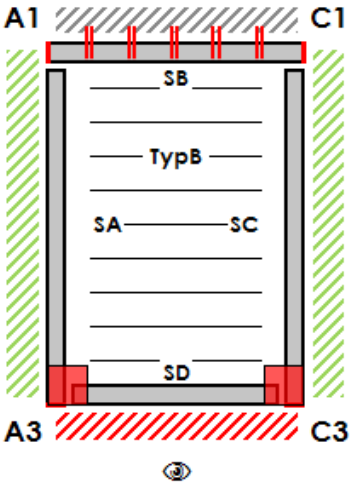

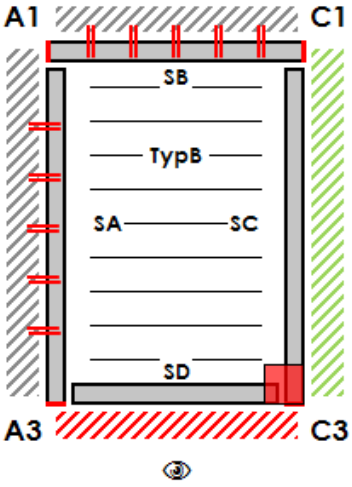

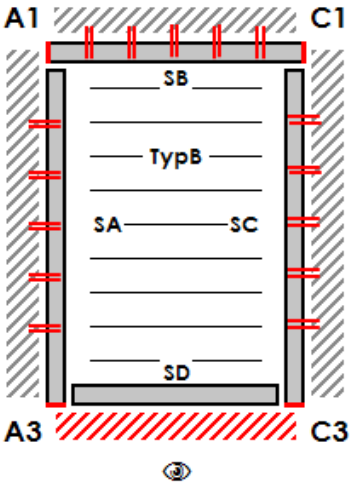

- Anchored side: SB
- Compulsory pole: A3 / C3
- Optional pole: A1 / A2 / A3 / C1/ C2

- Anchored side: SA / SB
- Compulsory pole: C3
- Optional pole: A1 / A2 / C1 / C2/ C3

- Anchored side: SA / SB / SC
- Compulsory pole: -
- Optional pole: A1 / A2 / A3 / C1 / C2 / C3

Type D

Installation possibilities

- Free-standing, supported by 4 to 6 poles
- Possibility of anchoring to the adjacent building using the SA/SB/SC/SD perimeter frame, without having to use poles at the anchored side
- The SA/SB/SC/SD sides may be built up
- Handling area of at least 700 mm must be allowed above SA/SC sides

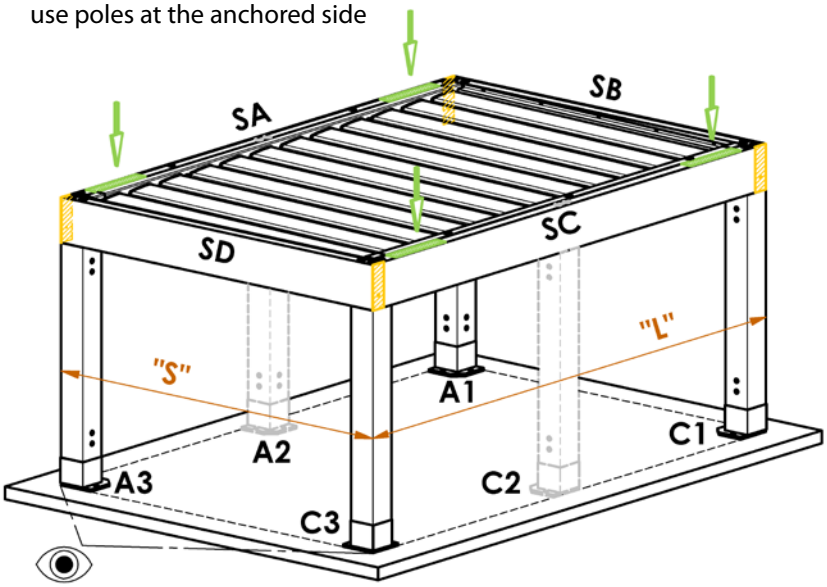

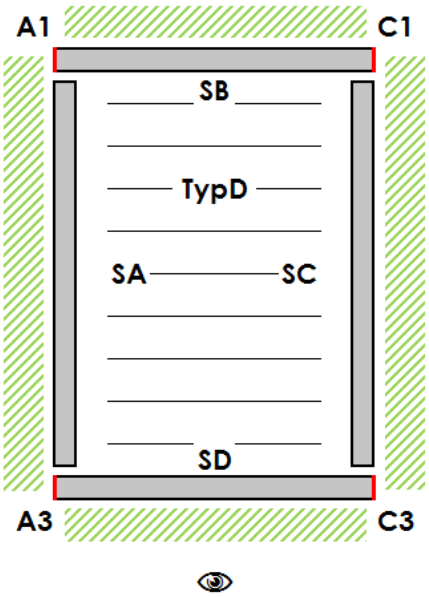

SA, SC – Perimeter frame – Length
SB, SD – Perimeter frame – Width
A1, A3, C1, C3 – Corner poles
A2, C2 – Additional poles

"S" – Maximum pergola width
"L" – Maximum pergola length

- Viewing direction

Examples of installation possibilities for Type D pergola with regard to the surroundings

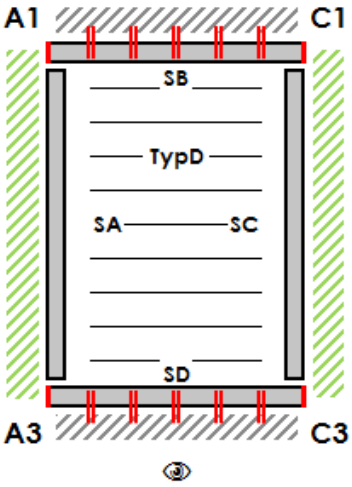

- Anchored side: SB / SD
- Compulsory pole: -
- Optional pole: A1 / A2 / A3 / C1 / C2 / C3

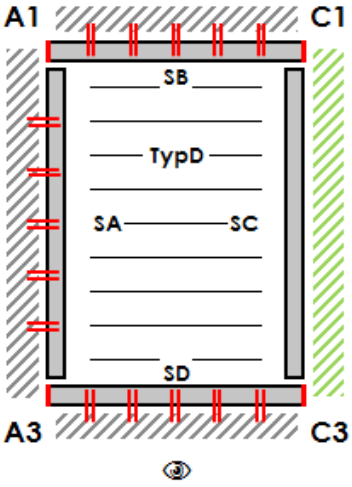

- Anchored side: SA / SB / SD
- Compulsory pole: -
- Optional pole: A1 / A2 / A3 / C1 / C2 / C3

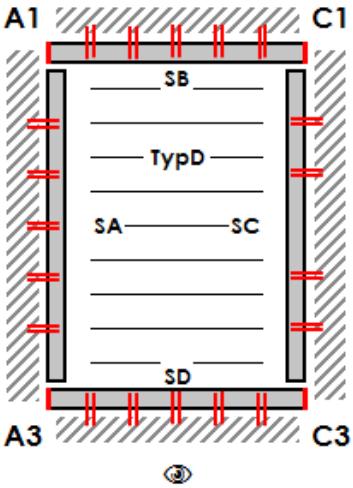

- Anchored side: SA / SB / SC / SD
- Compulsory pole: -
- Optional pole: A1 / A2 / A3 / C1 / C2 / C3

Frame anchoring

Frame anchoring means load-bearing fastening of the pergola frame to the adjacent supporting structures through anchoring holes. The pergola is supplied with pre-drilled anchoring holes. The pergola exerts load forces at these holes in accordance with the dimensions and external conditions, see attached table. Anchoring material, has to be protected against the corrosion. The type of protection has to be suitable for local weather conditions.
In order to consider the pergola frame load-bearing, it is necessary to select fasteners that are suitable for the given supporting structures and have sufficient dimensions to transfer the load forces, see attached table.
The manufacturer shall not be liable for incorrectly selected fasteners.
The manufacturer shall not be responsible for consequences of incorrect or insufficient anchoring in the adjacent supporting structures.
The user acknowledges that adverse effect may occur, such as water entry between the pergola structure and the building façade.

Anchored sides of pergola

Type A
possible side anchoring
SA / SC

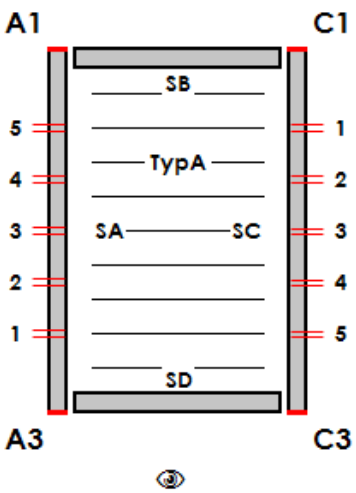

Type B
possible side anchoring
SA / SB / SC

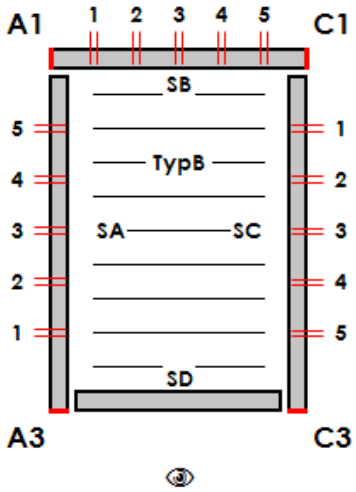

Type D
possible side anchoring
SA / SB / SC / SD

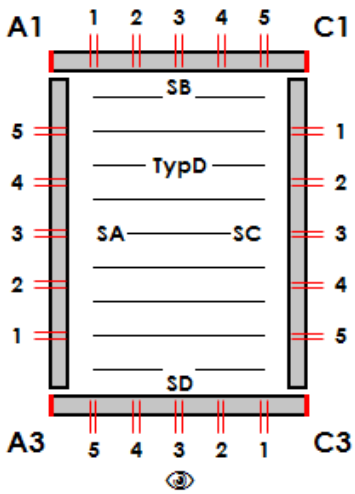

Arrangement of anchoring holes in the perimeter frame

This hole arrangement applies to all sides of the pergola.

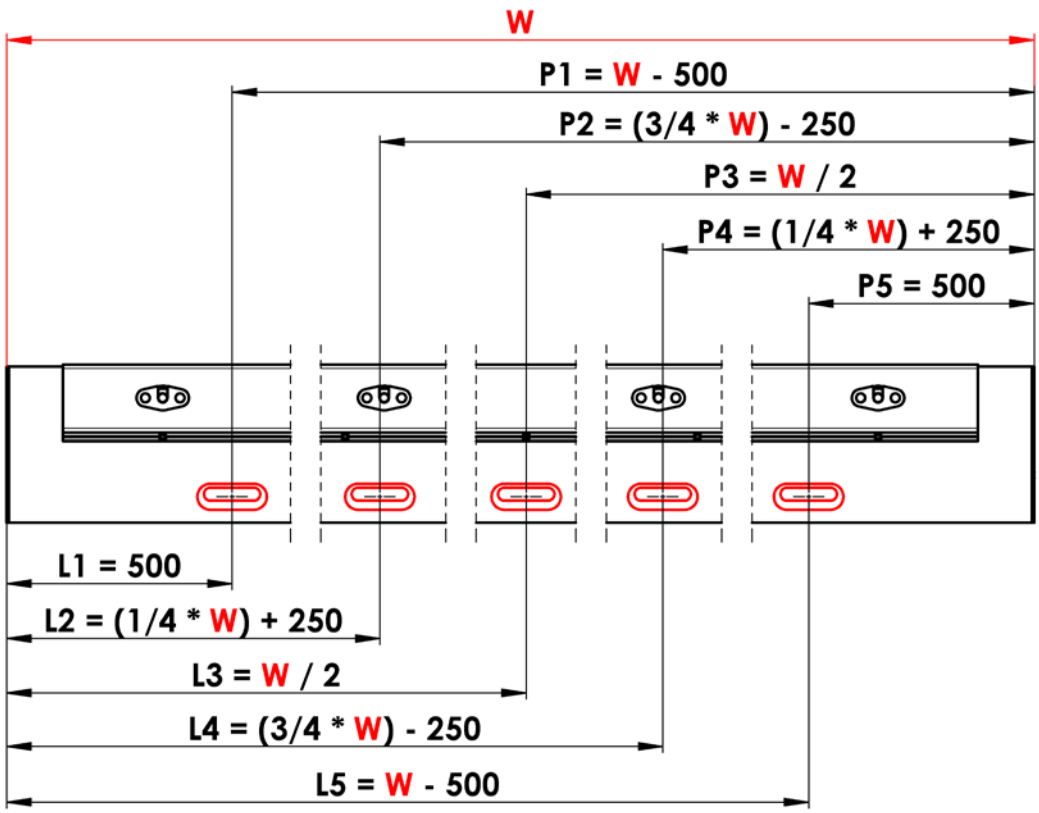

W – Pergola width or length

Anchoring hole detail

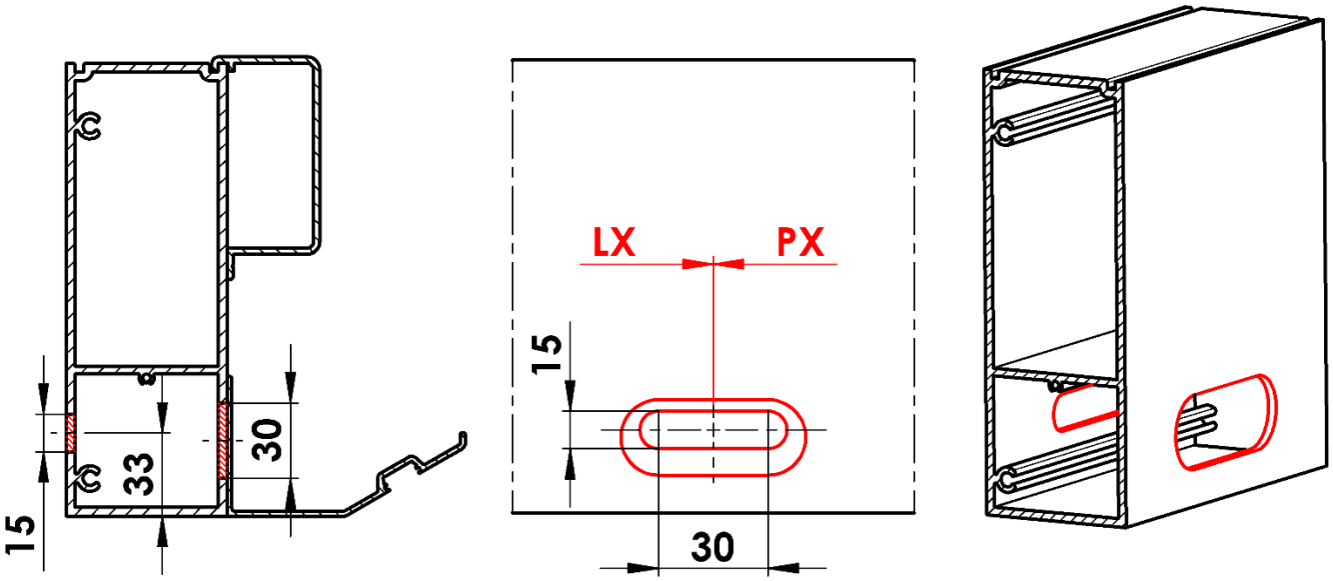

Orientation of slats

It is possible to select two directions of slat tilting. The tilting direction influences the possibility to regulate the amount of light, shade and air flow between the slats.

Tilting direction A

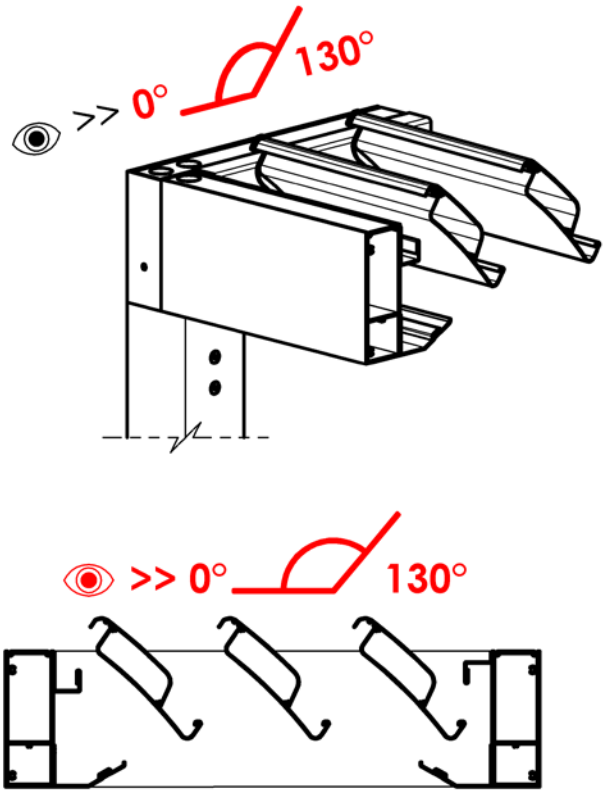

Tilting direction B

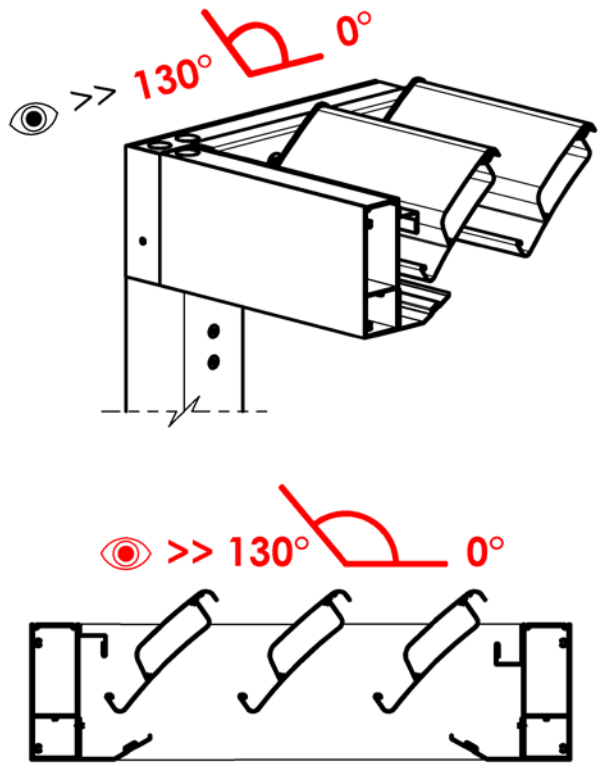

Access point

Serves for connecting the pergola electrical installation with power supply.
This point also serves for service works on the pergola drive and electrical installation.
For the linear drive, it is intended only for the electrical connection.

for Type A / Type B

- Access via a cover in the front side of the profile on the selected side.
- Handling area of at least 700 mm must be allowed in front of the cover.
- This area must remain accessible after the installation.

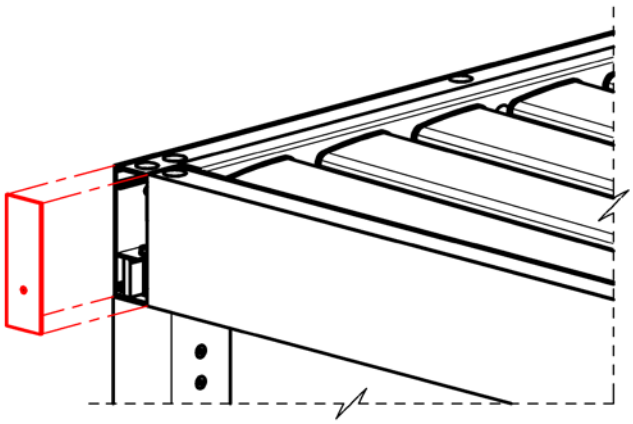

for Type D

- Access via a cover and opening in the upper side of the profile on the selected side.
- Handling area of at least 700 mm must be allowed in front of the cover.
- This area must remain accessible after the installation.

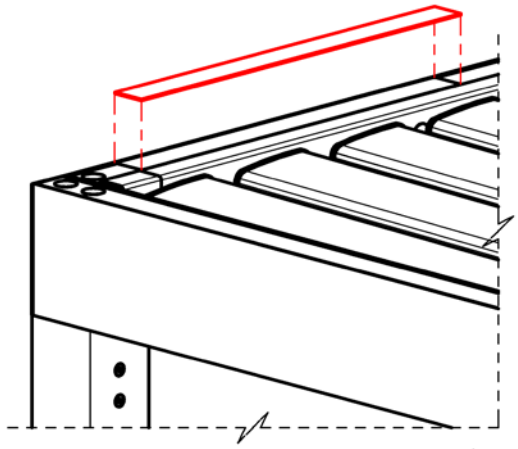

Slat segments

The individual slats are interconnected, comprising a slat segment.
One slat segment is driven by one motor. The pergola can have one or two slat segments.
The motor synchronously tilts the whole slat segment from 0° (slat shut) to 130° (slats fully open).
The slats may be stopped at any position within the range.
In case of two segments, it is possible to tilt each segment individually.

For pergolas of ≤ 5400 mm length – 1 or 2 segments may be selected.
For pergolas of > 5400 mm length – only 2 segments may be selected.

One segment may have min. 5 slats and max. 28 slats.

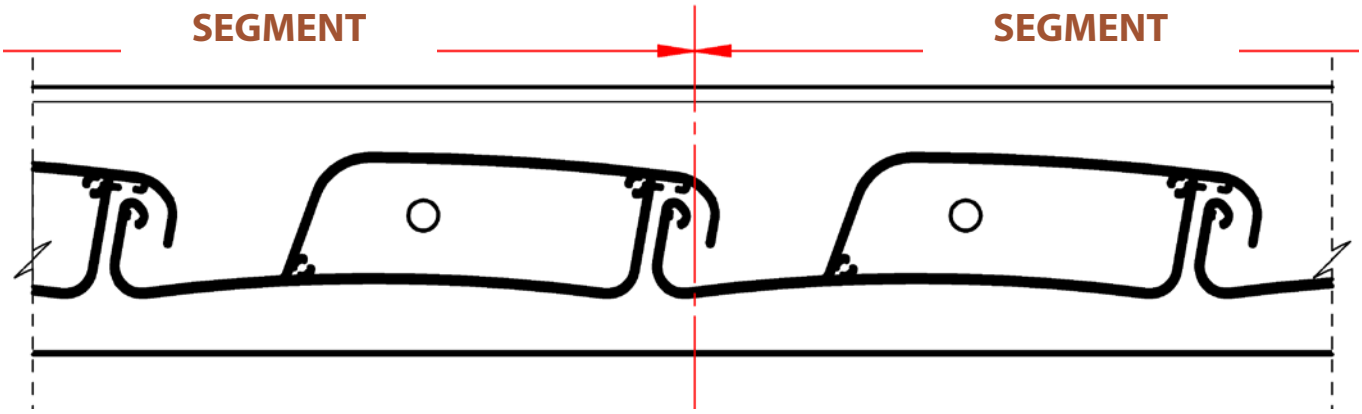

Dividing plane between two segments

The minimum manufacturable size of a pergola with 1 SOMFY motor is 7 slats, corresponding to a length of 1440 mm.
The minimum manufacturable size of a pergola with 1 LINEAR actuator is 11 slats, corresponding to a length of 2160 mm.
The minimum manufacturable size of a pergola with 2 SOMFY motors is 10 slats, corresponding to a length of 1980 mm, with a minimum of 5 slats per section.
The minimum manufacturable size of a pergola with 2 LINEAR actuators is 16 slats, corresponding to a length of 3060 mm, with a minimum of 6 slats per section.

Poles – Basic information

Pole is the basic supporting element of the pergola. It transfers the roof load to the anchoring point through a foot. The anchoring point must be sufficiently load-bearing in order to withstand all loads transferred by the pole foot. Fasteners connecting the pole foot and the anchoring point must have strength sufficient to withstand and transfer all load forces. Anchoring material, has to be protected against the corrosion. The type of protection has to be suitable for local weather conditions.
The manufacturer shall not be liable for incorrectly selected fasteners.
Only guide rails of screen roller shutters or glazing rails supplied by the pergola manufacturer can be anchored in the poles.

Position and displacement of poles

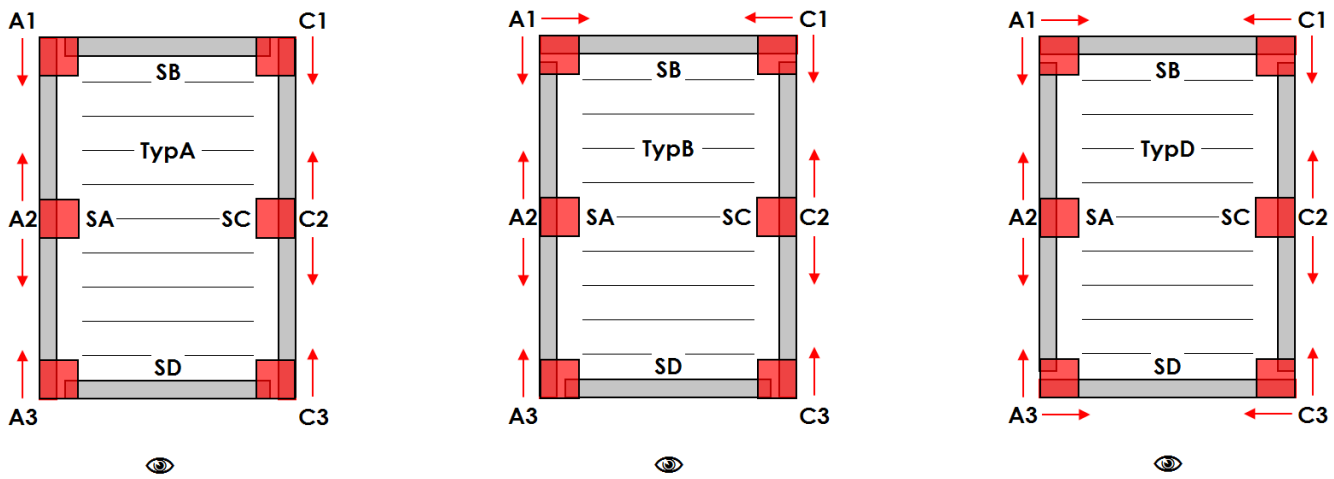

Lengthwise displacement the "Z" corner poles:

• type of installation A,B,D:	poles A1 / A3 / C1 / C3:	min. 255 mm / max. 1055 mm

Widthwise displacement the "Z" corner poles:

• type of installation B:	poles A1 / C1	min. 255 mm / max. 555 mm
• type of installation D:	poles A1 / A3 / C1 / C3	min. 255 mm / max. 555 mm

Lengthwise displacement the "Y" middle poles:

• type of installation A,B,D from the end of SB side:	poles A2 / C2	min. 1165 mm
• type of installation A,B,D from the end of SD side:	poles A2 / C2	min. 1165 mm

Passing height "H"

• type of installation A, B, D:	poles A1 / A2 / A3 / C1 / C2 / C3	min. 500 mm / max. 3000 mm

The displacement of the "Z" corner poles is always specified from the pergola's outer edge to the pole's axis.
The displacement of the "Y" middle pole A2 is always specified from the SB side's outer edge to the axis of this pole.
The displacement of the "Y" middle pole C2 is always specified from the SB side's outer edge to the axis of this pole.
The passing height "H" of the poles is always specified from the lower edge of the perimeter frame to the anchor point plane.

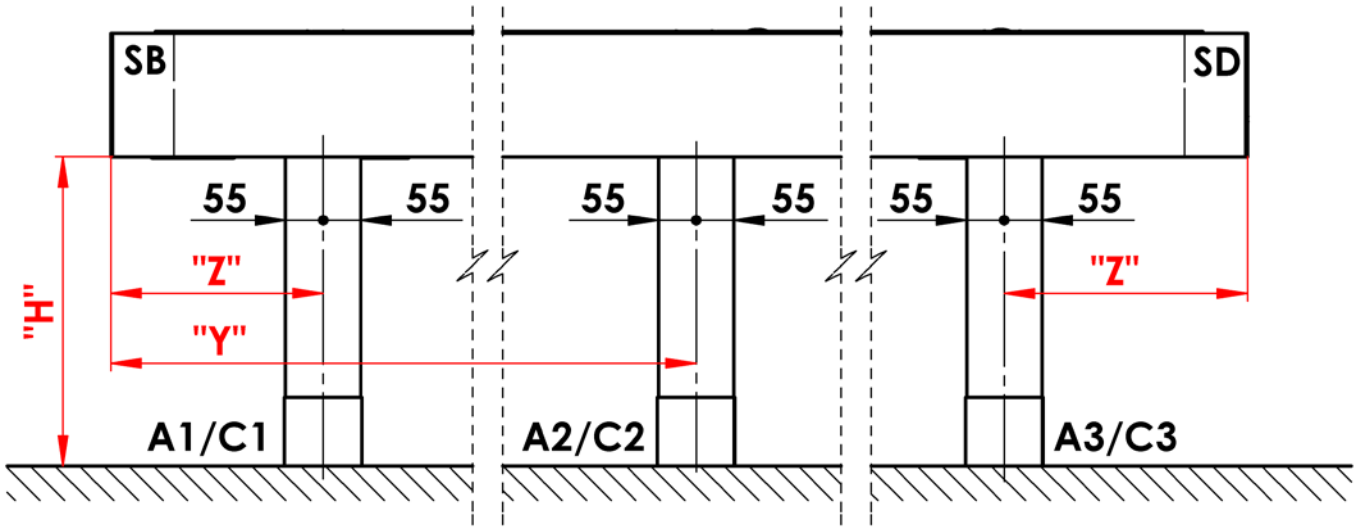

Concealed foot

The anchoring holes for the fasteners are hidden in the foot.
The lower end of the foot with access to the anchoring holes is covered by a sheet-metal trim.
The foot allows additional adjustment of the passing height "H" by +20/-10 mm.
Foundation for anchoring the foot is part of neither the offer nor the delivery. The implementation of the foundation with regard to specific terrain conditions must be solved individually in cooperation with an authorized person (architect, construction company, etc...)

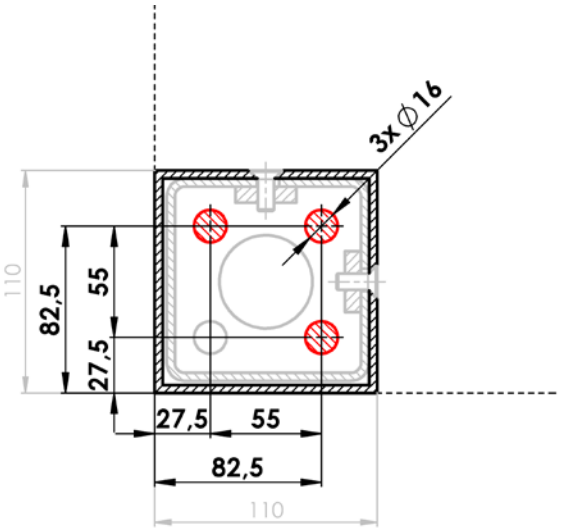

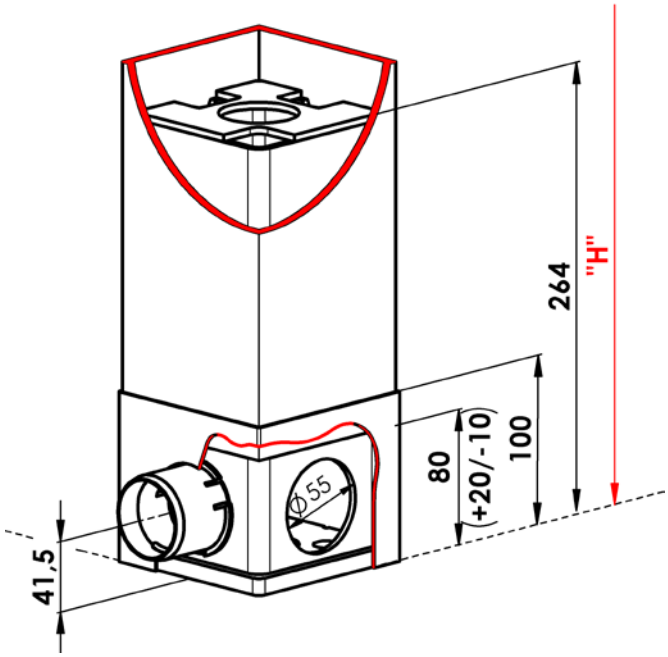

Extended foot

The anchoring holes for the fasteners are visible on the foot.
The lower end of the foot is covered by a sheet-metal trim.
The foot allows additional adjustment of the passing height "H" by +20/-10 mm.
Foundation for anchoring the foot is part of neither the offer nor the delivery. The implementation of the foundation with regard to specific terrain conditions must be solved individually in cooperation with an authorized person (architect, construction company, etc...)

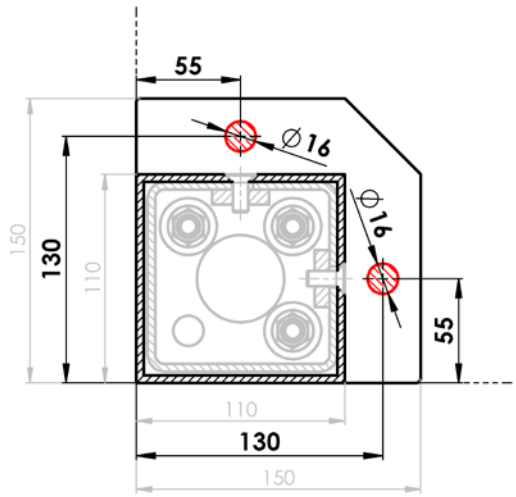

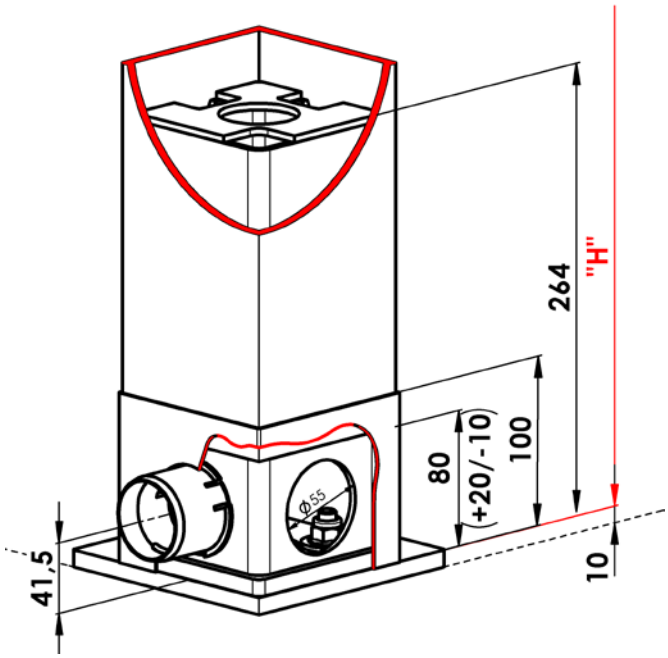

Draining system – Basic information

The pergola is equipped with a system for the draining of rain water. From the slats, water flows to gutters installed inside the pergola around the perimeter frame, and then to poles intended for this purpose. Water leaves the pole foot via a drain hole (see below).

The pergola is primarily a shading element with limited rain protection. Detailed information can be found in the section Basic specification – Water resistance.

The pergola slats are always weathered away from their drive.

The minimum number of drains located opposite the motors:
- Surface up to 12 m^2 – 1 drain
- Surface up to 24 m^2 – 2 drains
- Surface up to 24 m^2 – 3 drains

Each pergola pole can include a drain. The maximum number of drains is only limited by the number of poles.

Direction of water flow in the pergola structure

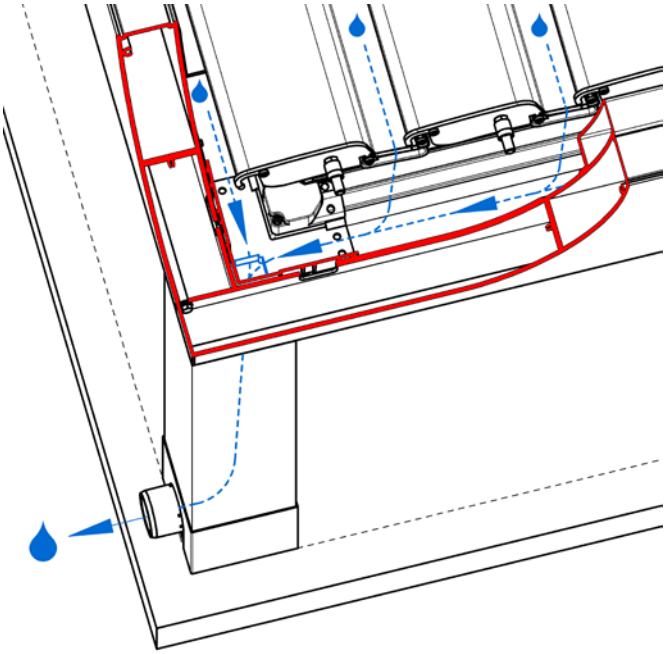

Water flow direction to the pole with a drain located outside the pergola corner

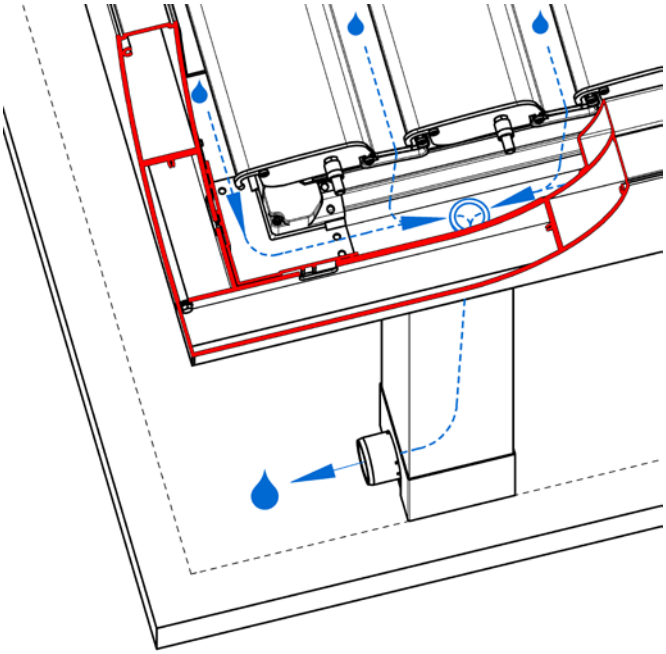

Water flow direction to the pole with a drain located in the pergola corner

Draining system – Pole drains

Uncontrolled draining (rectangular opening)

- The spout hose outfall is directed outside the pergola
- The hose has a loose end
- The hose ends just after the sheet-metal trim inside the pole
- Water flows freely through the rectangular opening in the trim
- Hose length = "H" + min. 300 mm

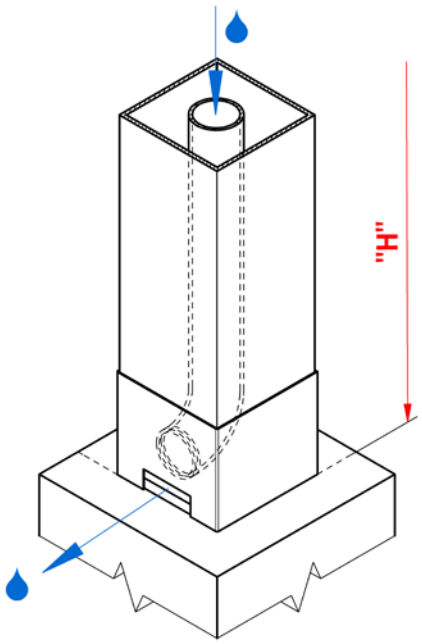

Controlled draining (half-round opening)

- The spout hose outfall is directed outside the pergola
- The hose has a plastic socket
- The hose with the socket ends outside the sheet-metal trim
- Water flows freely through the plastic socket
- DN50 drain pipe may be connected to the plastic socket (not part of delivery)
- Hose length = "H" + min. 300 mm

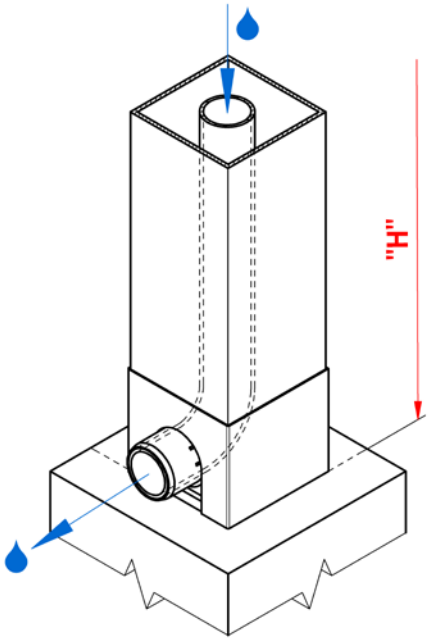

Draining outside the trim (full trim)

- This type of draining is primarily intended for cases where the foot is anchored under the final terrain level and further connection of the spout hose is under the final terrain level
- The spout hose outfall is directed outside the pergola
- The hose has a loose end
- Hose length = "H" + min. 300 mm

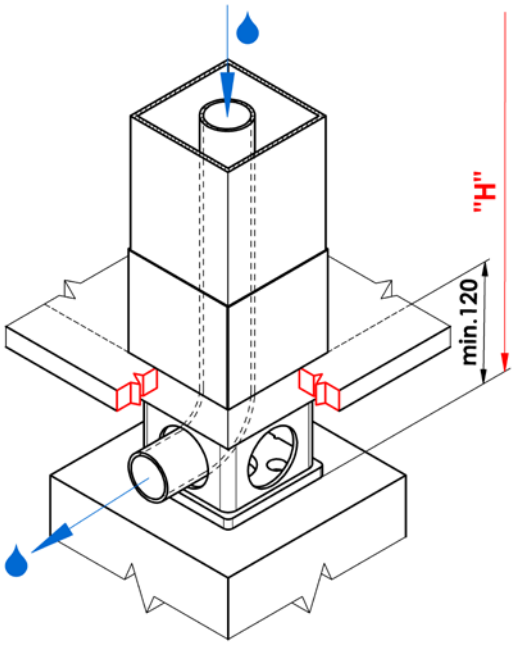

Lighting

The pergola may be equipped with lightning inside, by a LED lightning system, which is installed in the groove of the guttter profile and covered by light diffuser or alternative solution is installation of spot lights, which are integrated into the slats.
Light colour:

- Day white (4000K)

Lighting placement

Lengthwise

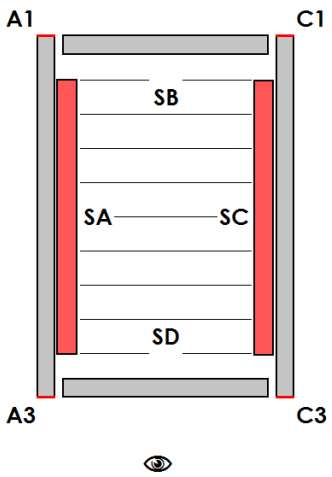

Widthwise

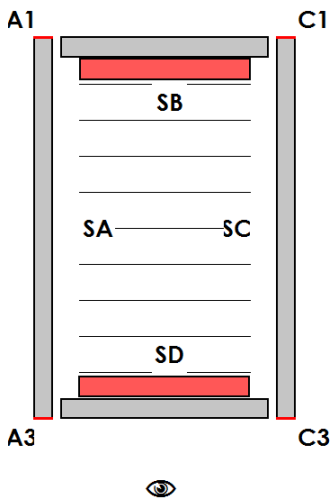

Lengthwise and widthwise

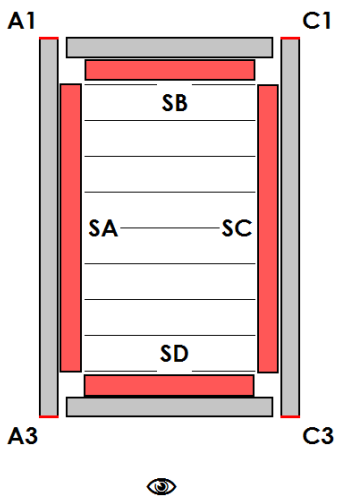

Slat lighting - positioning of LED spot lights

The number of spotlights in the slat

Length in mm		The number of spotlights		Illuminated slats
from	to	Total	In the slat (pcs)	
1440	1619	7	2	3, 5
1620	1799	8	2	3,6
1800	1979	9	2	3,7
1980	2159	10	2	4,7
2160	2339	11	2	4,8
2340	2519	12	2	4,9
2520	2699	13	3	4,7,10
2700	2879	14	4	3,6,9,12
2880	3059	15	4	3,6,10,13
3060	3239	16	4	3,7,10,14
3240	3419	17	4	3,7,11,15
3420	3599	18	4	4,8,11,15
3600	3779	19	4	4,8,12,16
3780	3959	20	4	4,8,13,17
3960	4139	21	4	4,9,13,18
4140	4319	22	4	5,9,14,18
4320	4499	23	4	5,10,14,19
4500	4679	24	4	5,10,15,20
4680	4859	25	5	5,9,13,17,21
4860	5039	26	6	4,8,12,15,19,23
5040	5219	27	6	4,8,12,16,20,24
5220	5399	28	6	4,8,12,17,21,25
5400	5579	29	6	5,9,13,17,21,25
5580	5759	30	6	4,9,13,18,22,27
5760	5939	31	6	4,9,14,18,23,28
5940	6119	32	6	4,9,14,19,24,29
6120	6299	33	6	5,10,15,19,24,29
6300	6479	34	6	5,10,15,20,25,30
6480	6659	35	7	5,9,14,18,22,27,31
6660	6839	36	8	5,9,13,17,20,24,28,32
6840	7200	37	8	5,9,13,17,21,25,29,33

Number of slats with spotlights

Width in mm		The number of spotlights (pcs)
from	to	
1000	2380	2
2381	4500	3

ARTOSI
Optional accessories

Cover sheets

This fitting element is intended to cover the gaps between the pergola and the adjacent structure.
The sheets are manufactured to length, with max. length of one sheet being 4000 mm; material: AL.
Surface treatment of the sheet may be selected from the standard ARTOSI colour card; other RAL colours are upon request for an extra charge.

The sheets are not part of the pergola; they are optional accessories and must be ordered separately.

The manufacturer shall not be responsible for failures and defects caused by incorrect incorporation of the pergola to adjacent structures.

Sheet PG PK_01

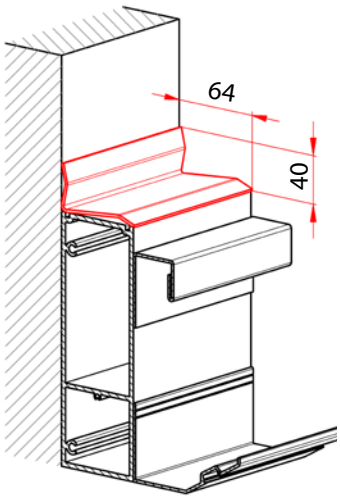

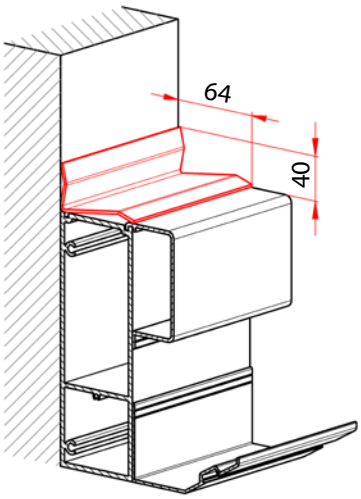

Sheet PG PK_01/1

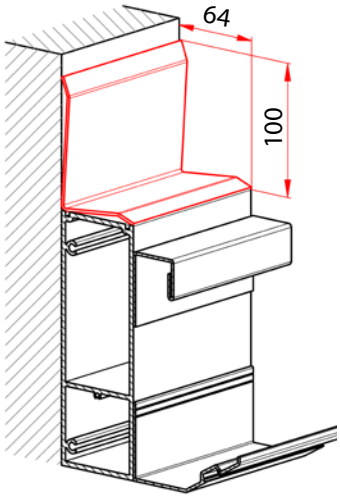

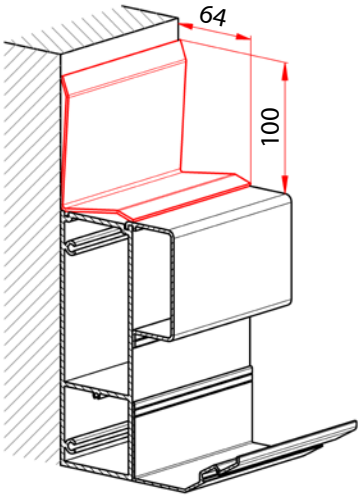

Cover sheets

Sheet PG PK_02

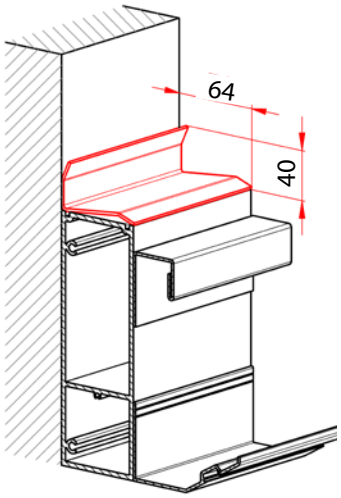

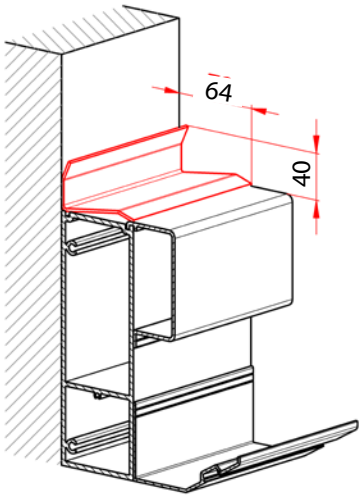

Sheet PG PK_02/1

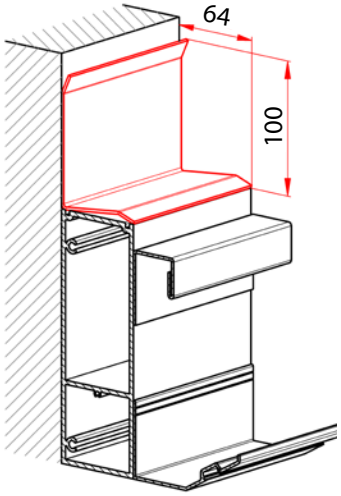

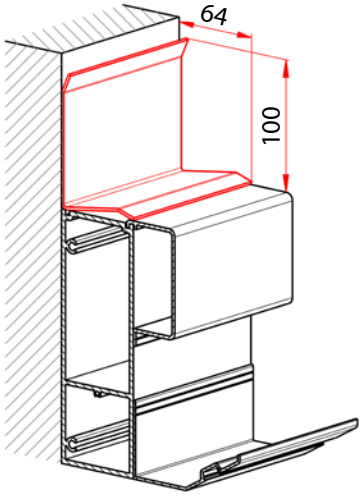

Cover sheets

Sheet PG PK_03

Dimension A optional
min. 25 mm, max. 300 mm

Dimension B optional
min. 25 mm, max. 300 mm

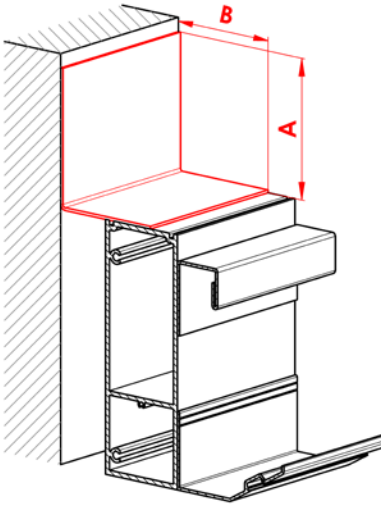

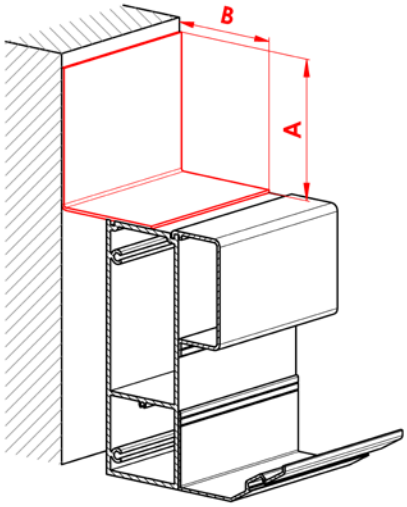

Sheet PG PK_04

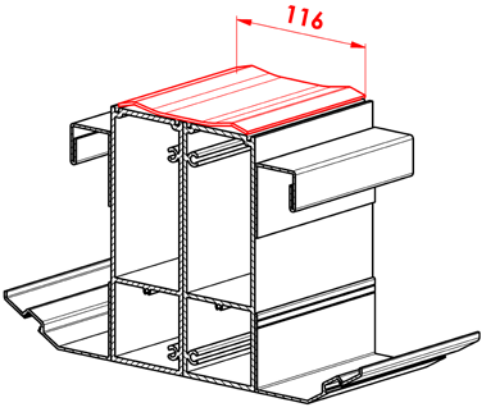

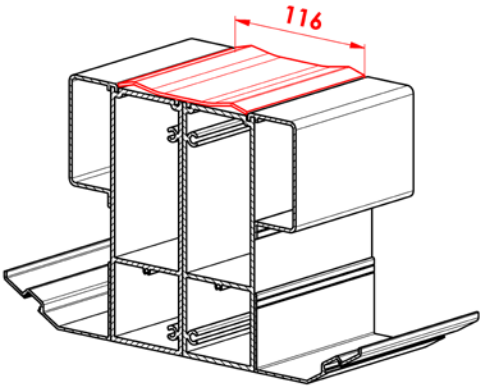

Sheet PG PK_05

Cannot be combined with sealing brushes.

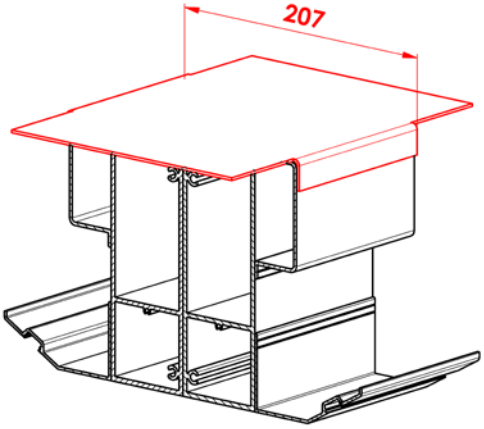

Sealing brushes

Prevent light transmission and rain water flow between the slat and the perimeter frame.

The brush consists of an aluminium bearing profile and UV-stable black polypropylene bristles.
They are attached to the perimeter frame by TEX screws 3.5×9.5 (part of delivery).
Surface treatment of the aluminium profile may be selected from the standard ARTOSI colour card; other RAL colours are upon request for an extra charge.

The sealing brushes consist of several segments and they are to be ordered according to the pergola length "L" and supplied in a set for both long sides of the pergola.

The brushes are not part of the pergola; they are optional accessories and must be ordered separately.
Note: Applies only to the SOMFY motor version. For the version with the linear motor, the brush seal is automatically included as part of the cover in the standard pergola configuration.

Sealing brush - SOMFY motor

Motor side sealing brush

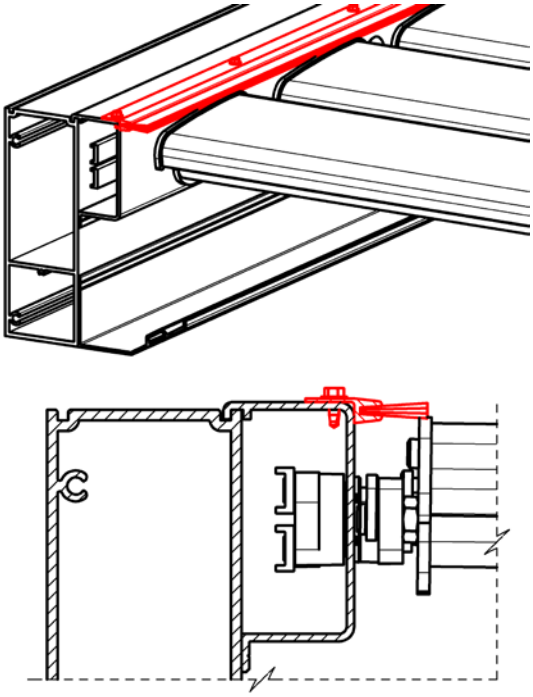

NON-motor side sealing brush

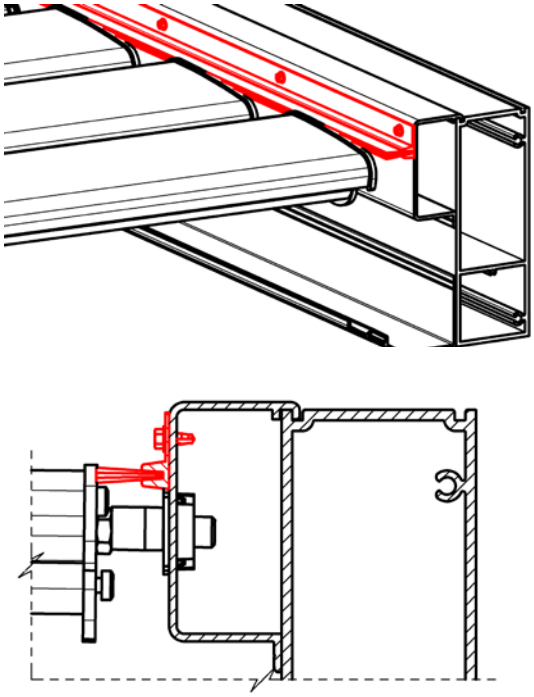

Sealing brush - Linear motor

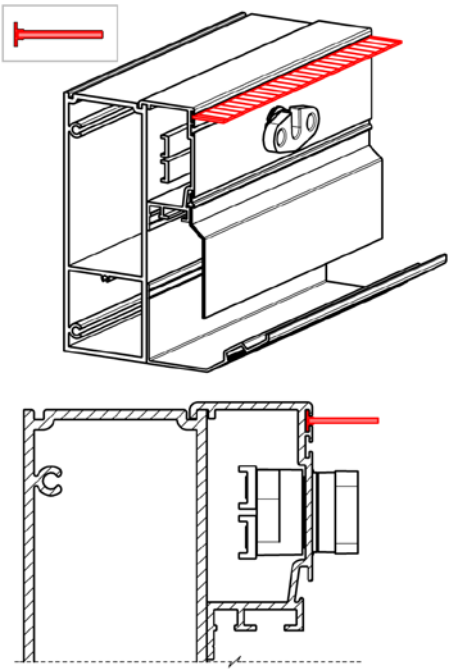

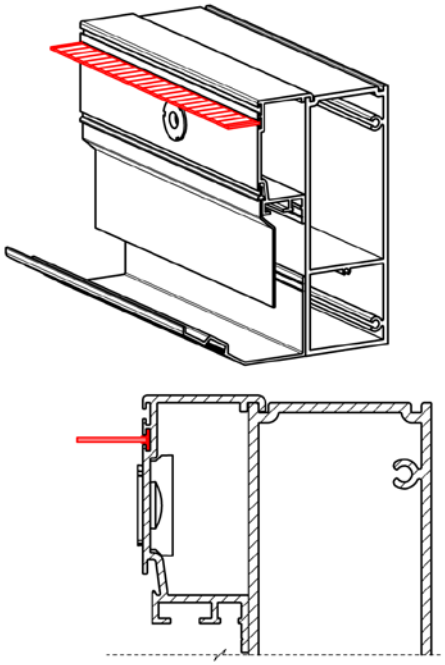

ARTOSI GLASS

- protects from noise, dust and bad weather
- selection of the number of panels from two to six
- selection of the method of opening
- obstruction against forced entry
- easy installation thanks to pre-assembled system
- easy and fast operation and maintenance
- colour matching with the ARTOSI pergola as well as the ALFA screen roller blind thanks to a wide range of RAL colours used

ISOTRA *Quality*

SLIDING FRAME GLAZING SYSTEM

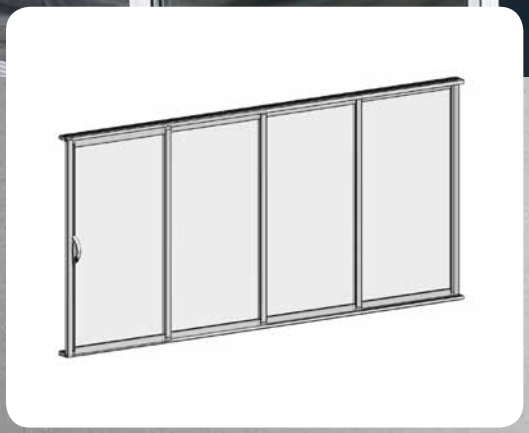

- protects from noise, dust and bad weather
- obstruction against forced entry
- colour matching with the ARTOSI pergola as well as the ALFA screen roller blind
- locks against glass removal
- easy installation thanks to pre-assembled system
- easy and fast operation and maintenance
- selection of the number of panels and method of opening

ISOTRA *Quality*

SLIDING FRAME GLAZING SYSTEM

Basic specification

The sliding frame glazing system, made from aluminium profiles and glass inset is used for the glazing of the ARTOSI pergolas. The system features slide opening, i.e., the individual panels slide one behind the other. Two- to six-panel version of the system can be ordered. The special shape of the vertical profile also serves as a handle over its whole length, the glass used is transparent tempered glass of 6 mm thickness. The system can be equipped with stainless lockable handles.

Product features

Weight	
Area weight of the system	16,48 kg/m^2 (when using ESG 6 mm glass)
Weight per regular meter	36,26kg (when height of 2,2m and using ESG 6 mm glass)

Used materials	Properties - classes
AL profiles	EN AW 6060 T66
Infill	Float 4-6 mm, ESG 4-6 mm, CONNEX 33.1*, Insulating double glass 4-8-4 mm
Plastic parts	PA6 – extruded polyamide TPE+PP – Thermoplastic elastomers, Polypropylene PP – Polypropylene PA6 GF30% - extruded polyamide, reinforced with glass fibres PE – Polyethylene

* other types of infill on request

Observed standards and certifications

Standard	Name
ČSN EN 12210	Windows and doors - Resistance to wind load - Classification
ČSN EN 1991	Load of building structures
ČSN 73 0810	Fire safety of buildings – Common provisions
ISO 9001:2015	Quality management system

Certification	Issued by
Manufacturer's statement No. AM/01 – Frame glazing systems	ALUMIST SE
Protocol on the product certification result No. 060-052700	Technický a zkušební ústav stavební Praha, s.p. pobočka Brno (Technical and Testing Institute of Constructions Prague, s.p. Brno branch)
Fire safety assessment for the product Railings and additional glazing of loggias and balconies Z220210089	PAVUS, a.s.
Quality management system for the production and installation of glazing systems – QMS-4920/	STAVCERT Praha, spol. s.r.o.
Certificate type e.13.906.804	TÜV Czech

Standard dimensions and loading

Frame glazing system	Width (mm)		Height (mm)		Loading (kg/m^2)	Loading (kg/BM)
	min.	max.	min.	max.	max.	max.
one panel	700	1000	500	2700	25*	65**
glazing area	1400	6000	500	2700	25*	65**

* glass thickness 6 mm
** glass thickness 6 mm and max. glazing height 2.7 m

Technical description

A. Material

The sliding window frames, panel guide profiles, rails and closing rails are made of aluminium alloys with grey anodised surface treatment or with the standard white powder coating (no type of surface treatment), extra-cost colours according to the RAL chart, with gloss, matt or structured surface treatment. The lower rails are always in anodised colour! Other components are not subject to weather effects and UV radiation (stainless steel, plastic). The glass used is tempered safety glass, 6 mm, transparent.

B. Composition, design and function of the product

Glass is inserted and sealed with silicone in profiles with brush seals, connected with plastic angles with stainless self--lubricating bearings with plastic bandage and locks against glass removal. 2–6 sliding panels travel over the lower rail, being lead in the upper rail (not interfering with the inner area of the pergola). The sliding panels can move to one side, or symmetrically to both sides (curtain). The lower rail includes openings for the draining of rainwater and thawing snow. The side profiles and the design of the vertical profiles ensure increased tightness of the whole structure.

C. Product installation

The system is pre-assembled, which facilitates the installation. The system is installed from the inside of the pergola. The guide rail is to be attached to the aluminium frame of the pergola using stainless metal screws. The lower rail is to be attached to the foundation by screws and plugs. The foundation must be supporting, stable and levelled, e.g., concrete, concrete pavers, interlocking pavement, brick wall, etc.

Note:
If the pergola is equipped with sliding glass panels, the user is required, in case of snowfall, to protect the equipment by opening the slats (i.e., turn the slats to vertical position). If snow has already covered the closed pergola, remove the snow cover from the pergola roof as soon as possible. Otherwise, the travel system of the panels, or even the whole glazing system is likely to get damaged.

If the length of the pergola is more than 5000 mm and glazing is installed, we recommend adding a central prop A2/C2 as a support against sagging of the perimeter frame of the pergola in case of possible snow load.

Possible versions

Number of panels

2D

3D

2x 2D

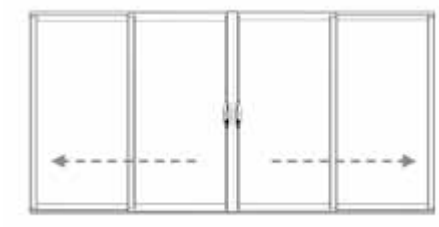

2x 3D

4D

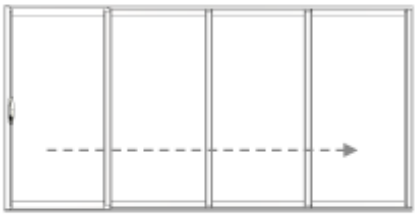

5D

Možnosti otvírání

One-sided (left/right)

Interior view

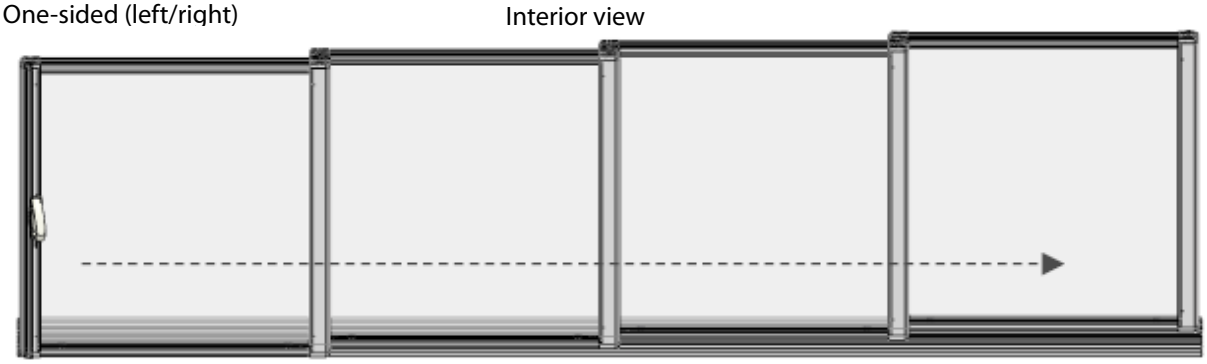

Double-sided (curtain type)

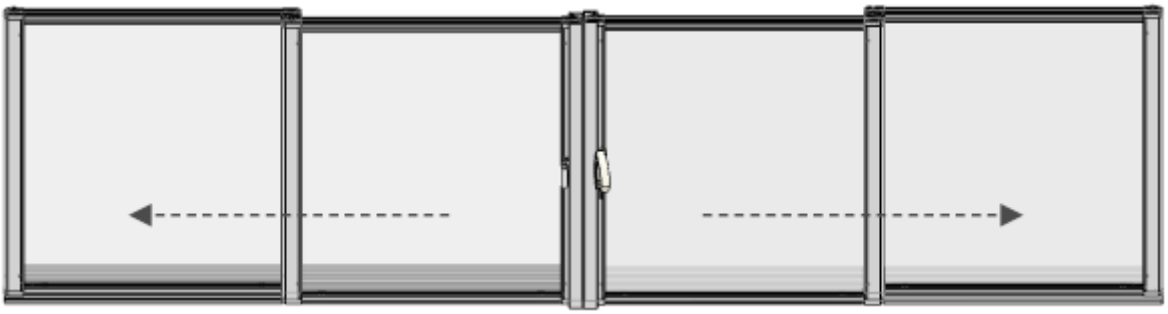

Methods of opening

Opening to the left – the right panel is the outermost, is equipped with a handle ("handle on the right" or "panel folding to the left" can also be specified in the order)

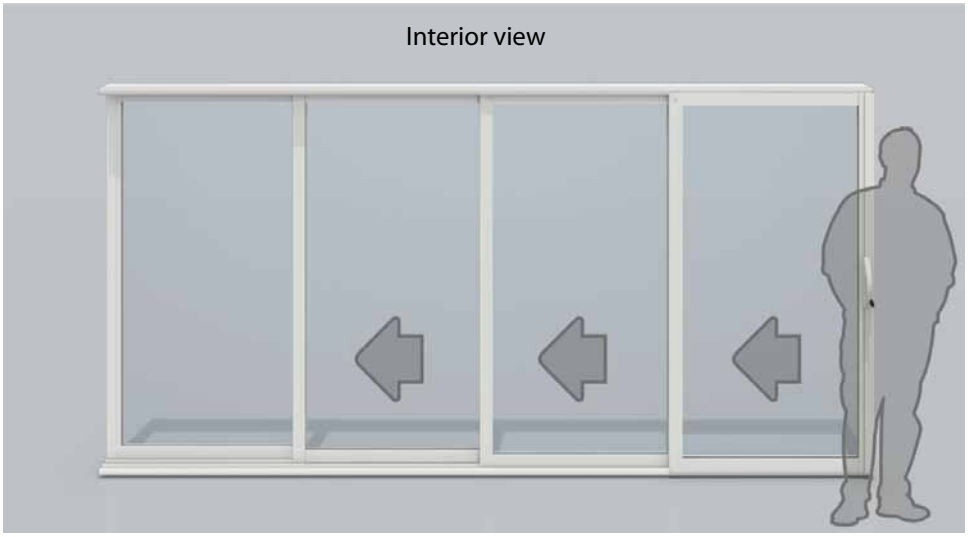

Opening to the right– the left panel is the outermost, is equipped with a handle ("handle on the left" or "panel folding to the right" can also be specified in the order)

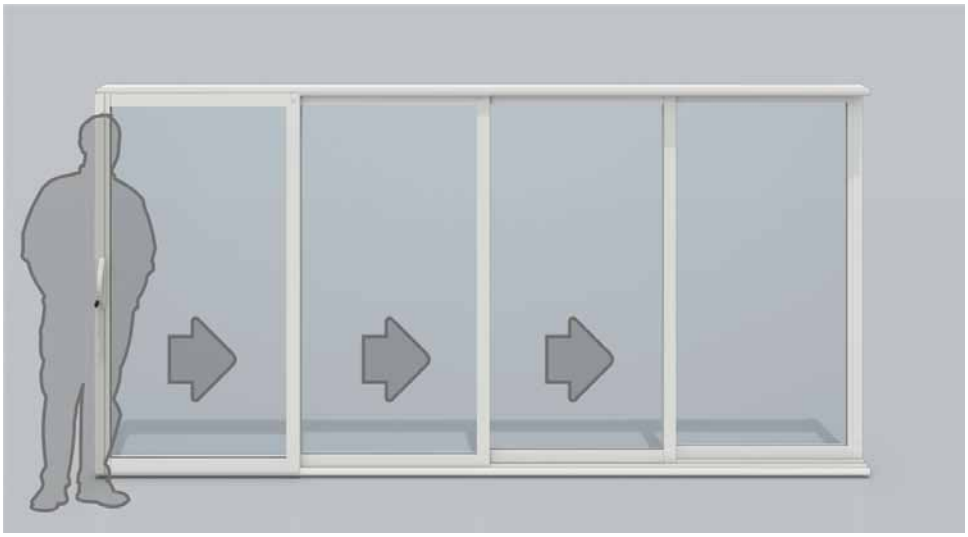

Curtain-type opening – the two panels in the centre are the outermost, are equipped with a handle ("handle on the left and right" or "curtain-type" can also be specified in the order)

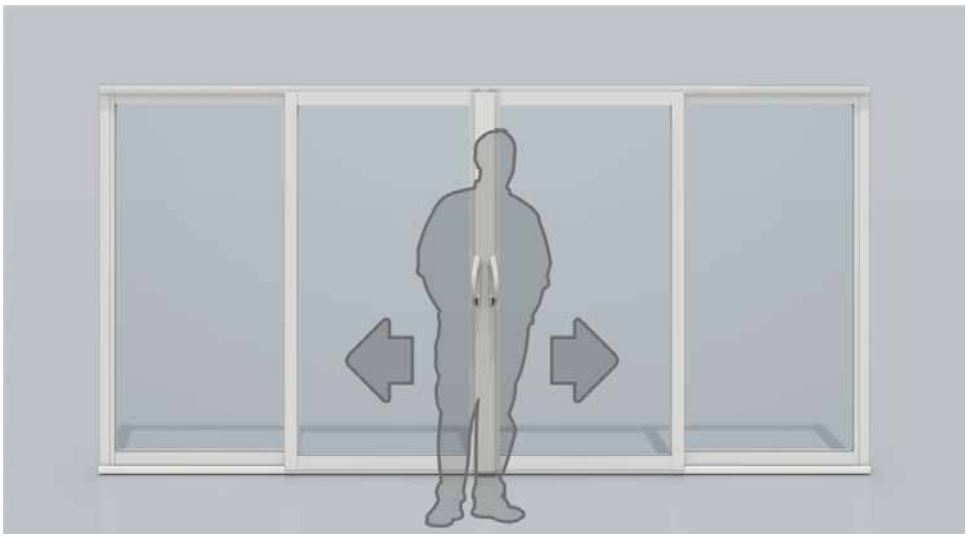

Vertical profiles

Reinforced vertical profiles to be used in glazing for pergola passing heights up to 2700 mm.

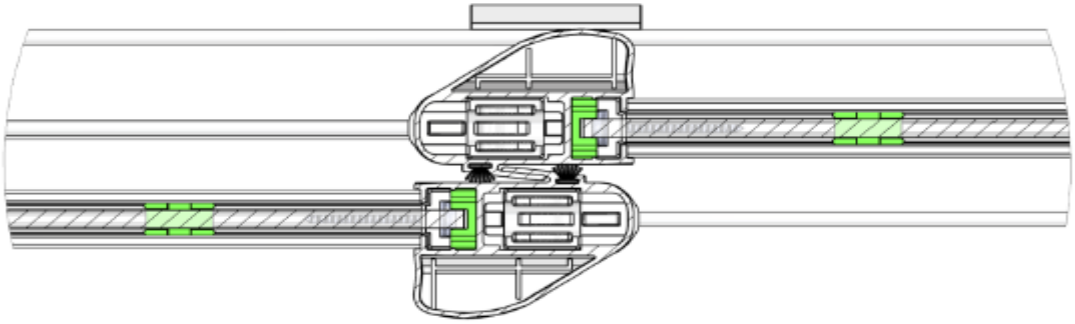

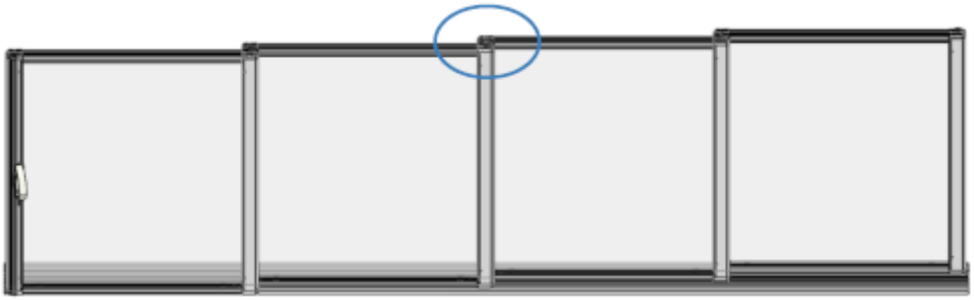

End profiles

1.

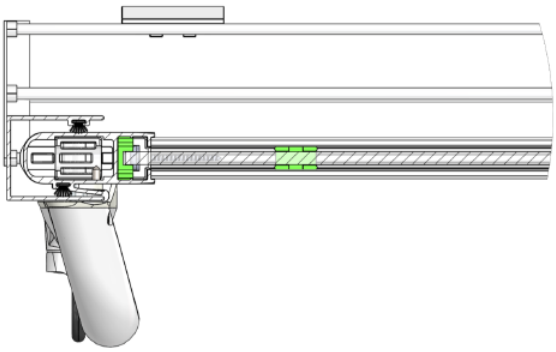

2.

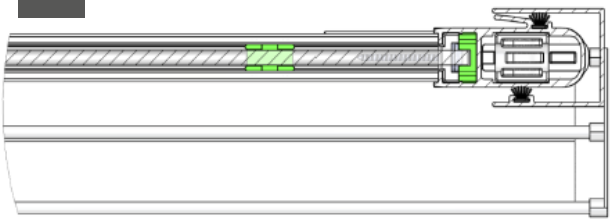

1.

2.

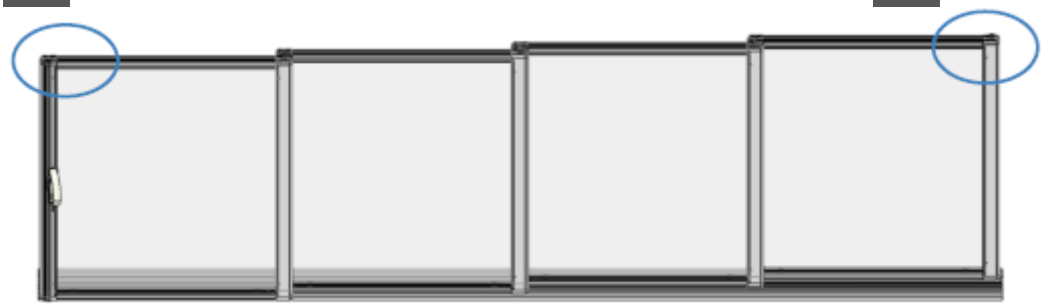

Glazing

Cross-section – detail

Profiles for glazing from 6 mm tempered safety glass (ESG).

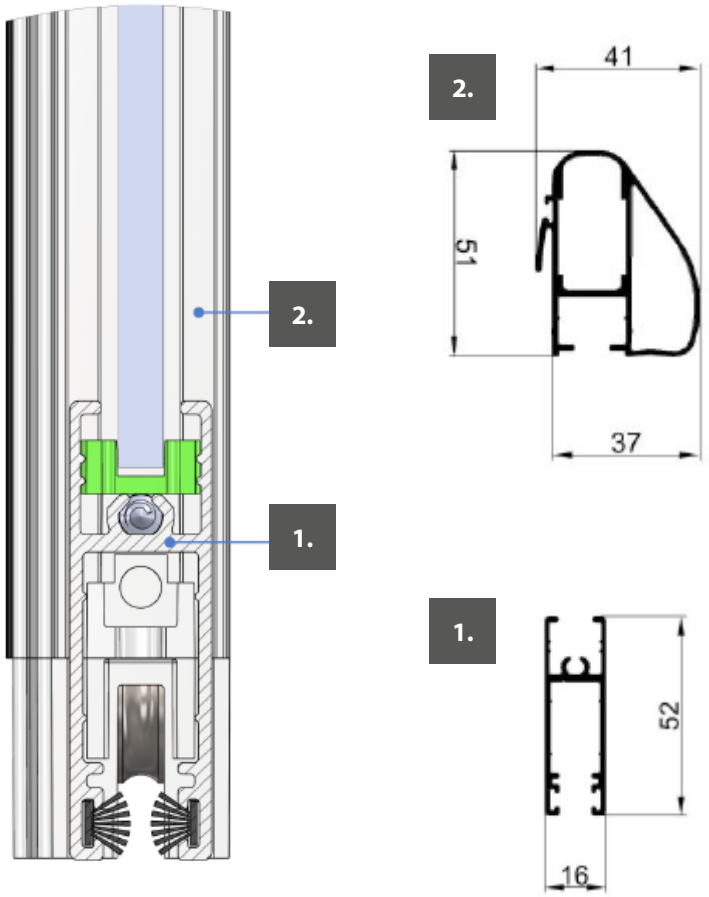

Security against opening

Handles

Metallic handle with lock

Normal handle
100 mm

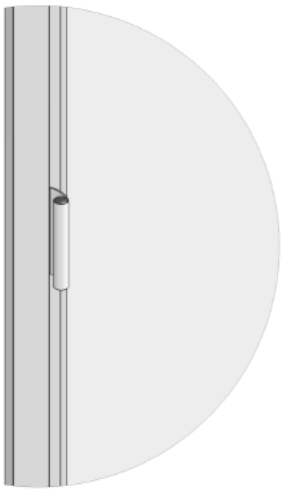

Additional handle - only from exterior, does not belong to the standard equipment

Wing screw

Located on the lower right or lower left side, depending on the selected opening method.

Rail profiles

Standard rails

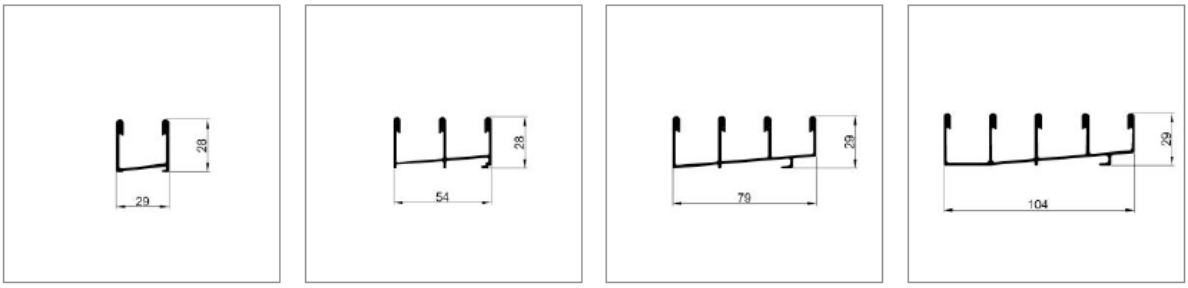

Vertical profile

Profile for a simple glass pane, 6 mm (ESG). The profile is reinforced up to the glazing height of 2.7 m.

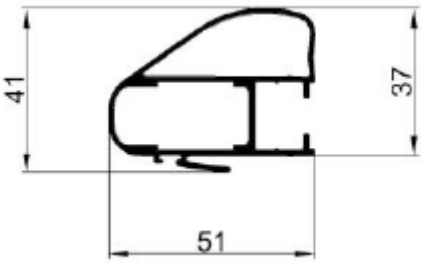

Installation

Rail cover

1. Rail cover

2. Rail

Put the covers to both ends of the rail. Use a knife to cut the overlapping part of the cover.

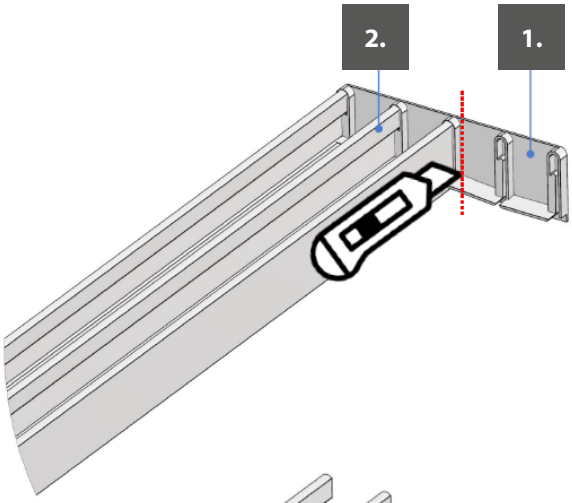

Drain opening cover

1. Drain opening cover

2. Rail

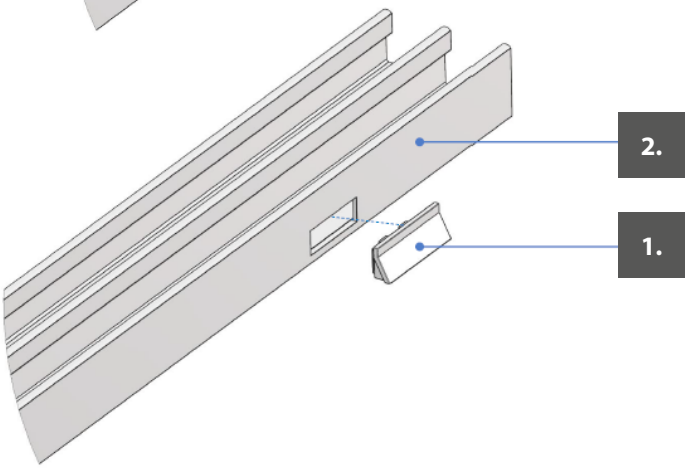

Handles

Metallic handle with a lock

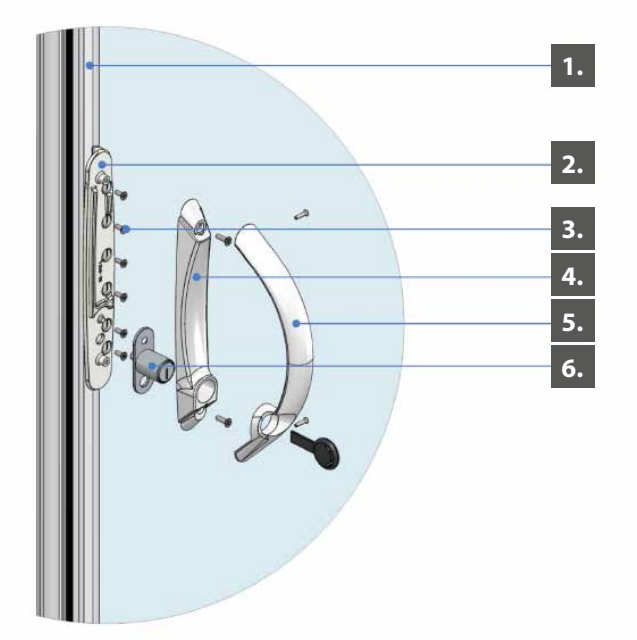

1. Vertical profile
2. Handle – base part
3. Handle – screw 2.9 × 6.5
4. Handle – lower part
5. Handle – lock 6. Handle – arch

1. Disassemble the supplied handle.
2. Apply the base part of the handle to the vertical profile of the panel, to the required height.
3. Use a drill bit ø 2.5 to prepare openings for screws to attach the base part of the handle.
4. Fasten the base part of the handle using the screws 2.9 × 6.5.
5. Slide the panel to the U-section and drill an opening for the bayonet lock pin (the opening passes through the U-section and the vertical profile wall).
6. Use the screws to fasten the lock and the lower part of the handle to the base part.
7. Use the screws to fasten the handle arch.
8. Test the lock function.
9. The diameter of the lock pin opening can be increased to facilitate locking.

Note: The lock insert is not double-sided (the lock does not pass through), i.e., the system can only be locked from the inside.

Normal handle

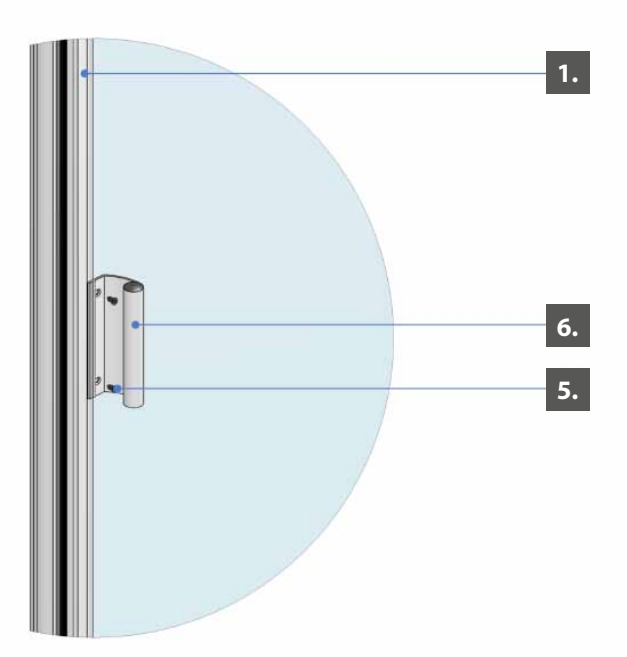

1. Vertical profile
2. Normal handle 100 mm
3. Handle – screw 2.9 × 6.5

1. Stick the handle to the vertical profile of the leaf, to the required height.
2. Use a drill bit ø 2.5 to prepare openings for screws to attach the handle. Do not damage the leaf glazing when drilling.
3. Adjust the openings on the handle by a countersink bit.
4. Fasten the handle using the screws 2.9 × 6.5.

Securing

Wing screw – assembly

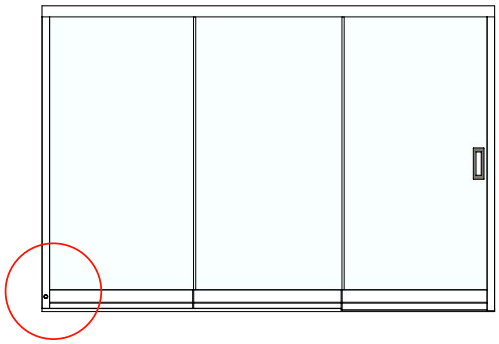

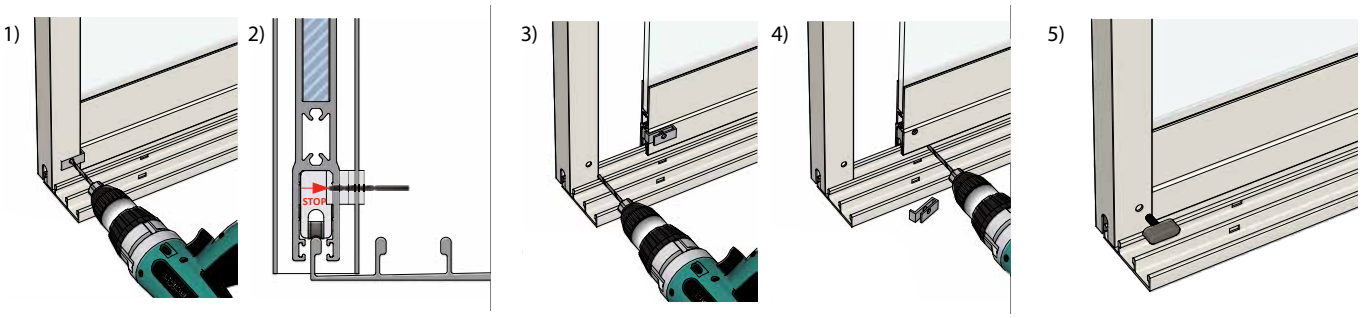

obr. 1
a) insert the wing into the U-profile
b) drill a hole in the U-profile and horizontal profile of the wing with a ø5 drill, using a drilling template
c) drilling depth is shown in figure No. 2

obr. 3
a) slide the wing out of the U-profile
b) enlarge the hole in the U-profile with a ø7 drill bit
c) clean the drilled hole with a countersink

obr. 4
a) cut the drill template from the counterpart of the wing screw
b) enlarge the hole in the horizontal profile with a ø7 drill bit
c) be careful not to damage the thread of the nut, that is inserted in the counterpart, with the drill

obr. 5
a) insert the wing into the U-profile
b) secure the wing against opening with the wind screw

Anchoring plan of the sliding frame glazing system

The rail must not be sunk in the floor – otherwise the glass will not fit.

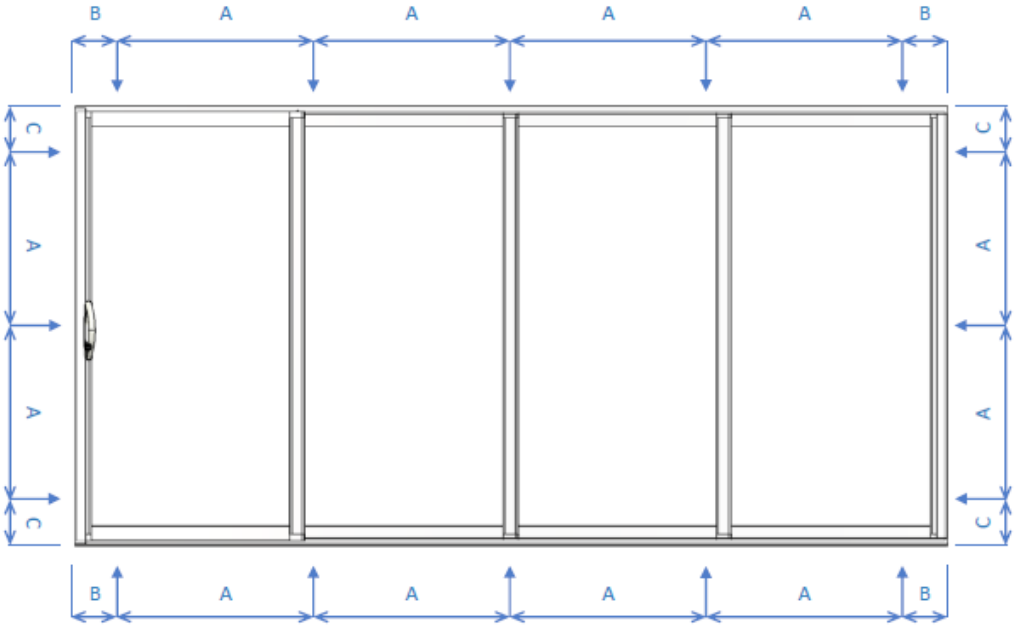

anchor hole spacing
A. max 750 mm
B. max 150 mm
C. max 300 mm

Recommended fasteners

1. PLUG min. 8 × 50 + SCREW min. 5 × 60, anchoring to concrete/brick
2. SELF-TAPPING SCREW min. 4.8 × 32, anchoring to metallic materials
3. SCREW min. 5 × 50, anchoring to wood

SLIDING FRAMELESS GLAZING SYSTEM

- ensures unobstructed view of the garden
- protects from noise, dust and bad weather
- colour matching with the ARTOSI pergola as well as the ALFA screen roller blind
- locks against glass removal
- easy installation thanks to pre-assembled system
- easy and fast operation and maintenance
- selection of the number of panels and method of opening

ISOTRA *Quality*

SLIDING FRAMELESS GLAZING SYSTEM

Basic specification

The sliding frameless glazing system, made from aluminium profiles and self-supporting glass inset is used for the glazing of the ARTOSI pergolas. The system features slide opening, i.e., the individual panels slide one behind the other. Two- to six-panel version of the system can be ordered. The self-supporting glazing is transparent safety tempered glass of 10 mm thickness, with stainless lockable handles to facilitate handling.

Product features

Weight	
Area weight of the system	25,36 kg/m^2 (when using ESG 10 mm)
Weight per regular meter	55,81 kg (when height 2,2m and using ESG 10 mm)

Used materials	Properties - classes
AL profiles	EN AW 6060 T66
Infill	Safety glass ESG 10 mm – drilled with ground edges
Cover of the horizontal profile	Stainless steel
Silicone gasket	PVC – typ 01043 TPV – 70BI86
Plastic parts	TPE + PP – Thermoplastic elastomers, Polypropylene PP – Polypropylene PA6 GF30% - extruded polyamide, reinforced with glass fibres
Plastic parts glue	Clearseal Glasklar transparent

Observed standards and certifications

Standard	Name
ČSN EN 12210	Windows and doors - Resistance to wind load - Classification
ČSN EN 1991	Load of building structures
ČSN 73 0810	Fire safety of buildings – Common provisions
ISO 9001:2015	Quality management system

Certification	Issued by
Manufacturer's statement No. AM/02 - Frameless glazing systems	ALUMIST SE
Protocol on the product certification result No. 060-052700	Technický a zkušební ústav stavební Praha, s.p. pobočka Brno (Technical and Testing Institute of Constructions Prague, s.p. Brno branch)
Fire safety assessment for the product Railings and additional glazing of loggias and balconies Z220210089	PAVUS, a.s.
Quality management system for the production and installation of glazing systems – QMS-4920/	STAVCERT Praha, spol. s.r.o.
Certificate type e.13.906.805	TÜV Czech

Standard dimensions and loading

Frameless glazing system	Width (mm)		Height (mm)		Loading (kg/m^2)	Loading (kg/BM)
	min.	max.	min.	max.	max.	max.
one panel	700	1000	500	2700	28*	70**
glazing area	1400	6000	500	2700	28*	70**

* glass thickness 10 mm
** glass thickness 10 mm and max. glazing height 2.7 m

Technical description

A. Material

The panel guide profiles, rails and closing rails are made of aluminium alloys with grey anodised surface treatment or with the standard white powder coating (other extra-cost colours according to the RAL chart). The lower rails are always in anodised colour! Other components are not subject to weather effects and UV radiation (stainless steel, plastic). The glass used is tempered safety glass, 10 mm, transparent.

B. Composition, design and function of the product

Glass is inserted and sealed with silicone in profiles with foam-plastic seals in the lower and upper parts. Smooth movement is ensured by castors (stainless, self-lubricating bearings with plastic bandage) in the lower aluminium profile. Two to six sliding panels travel over the lower rail, being lead in the upper rail. The sliding panels can move to one side, or symmetrically to both sides. The lower rail includes openings for the draining of rainwater and thawing snow. The side closing angle sections and silicone seals on the sides of the panels ensure increased tightness of the structure. It is possible to compensate up to 50 mm structural unevenness thanks to a special arrangement of the upper rail.

C. Product installation

The system is pre-assembled, and is installed from the inside of the pergola. It is to be attached to the existing pergola frame using stainless metal screws. The lower rail is to be attached to the foundation by screws and plugs. The foundation must be supporting, stable and levelled, e.g., concrete, concrete pavers, interlocking pavement, brick wall, etc.

Note:
If the pergola is equipped with sliding glass panels, the user is required, in case of snowfall, to protect the equipment by opening the slats (i.e., turn the slats to vertical position). If snow has already covered the closed pergola, remove the snow cover from the pergola roof as soon as possible. Otherwise, the travel system of the panels, or even the whole glazing system is likely to get damaged.

If the length of the pergola is more than 5000 mm and glazing is installed, we recommend adding a central prop A2/C2 as a support against sagging of the perimeter frame of the pergola in case of possible snow load.

Possible versions

Number of panels

2D

2x 2D

3D

2x 3D

4D

5D

Opening possibilities

One-sided (left/right

Interior view

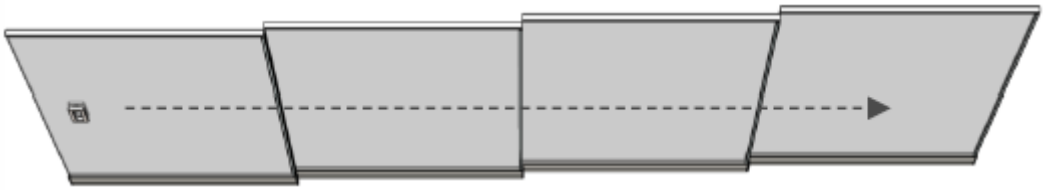

Double-sided (curtain type)

Methods of opening - Interior view

Opening to the left – the right panel is the outermost, is equipped with a handle ("handle on the right" or "panel folding to the left" can also be specified in the order).

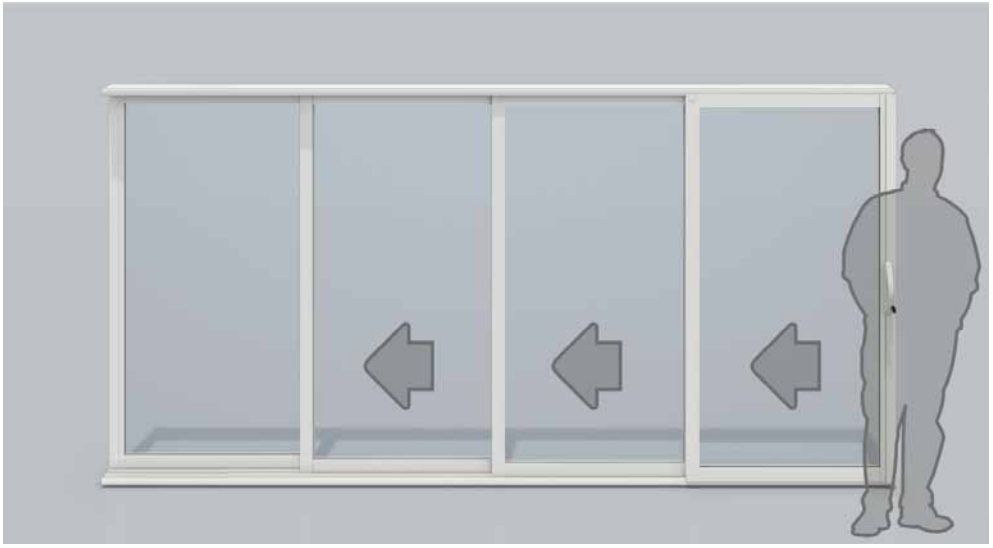

Opening to the right– the left panel is the outermost, is equipped with a handle ("handle on the left" or "panel folding to the right" can also be specified in the order).

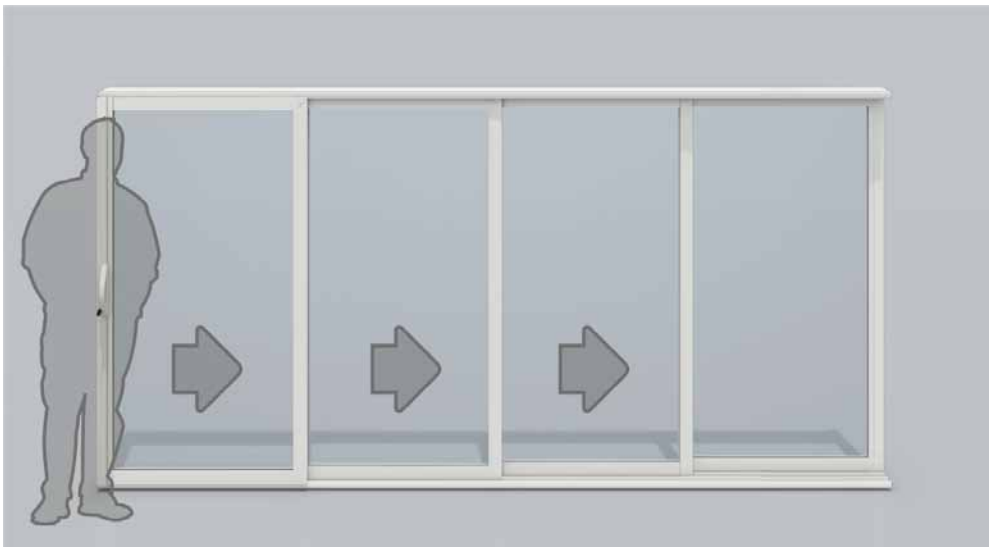

Curtain-type opening – the two panels in the centre are the outermost, are equipped with a handle ("handle on the left and right" or "curtain-type" can also be specified in the order).

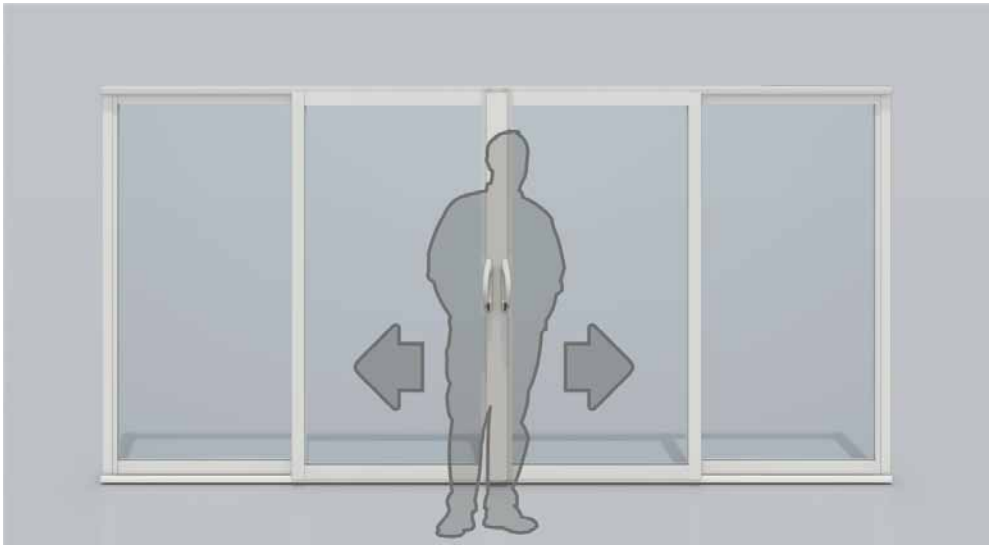

Panel overlap
(view from the interior)

Version with the panel overlap of 35 mm. Better mutual cover of the glazing.

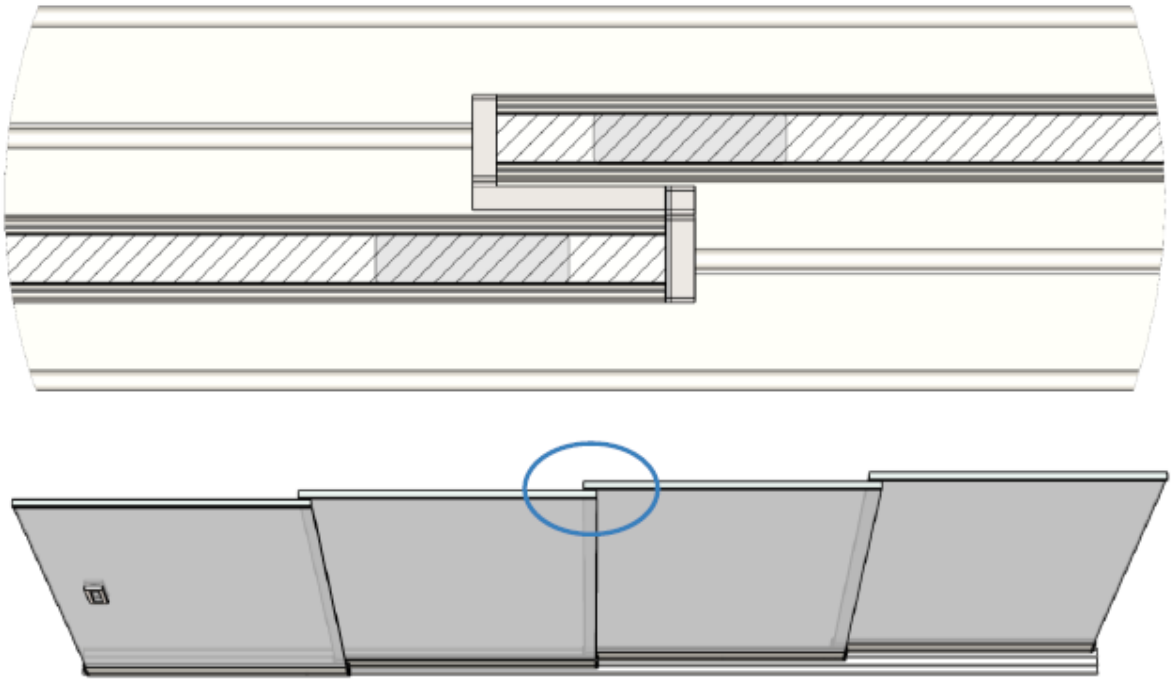

Handles and locks *(views from the interior)*

Version with handle

folding to one side

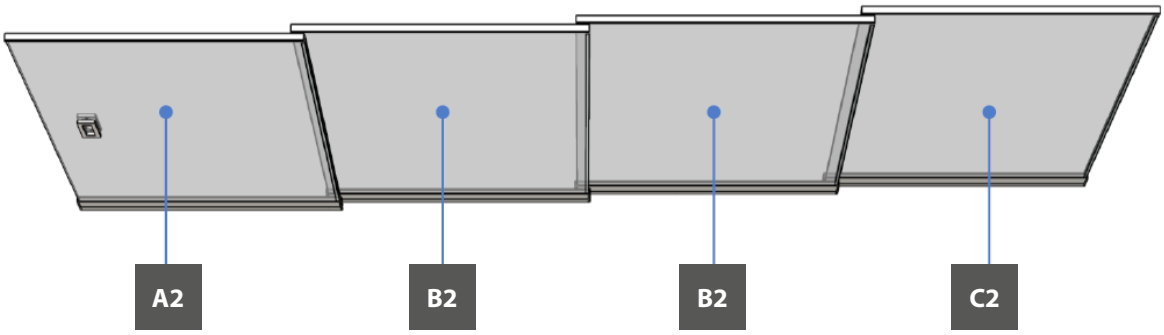

curtain-type folding

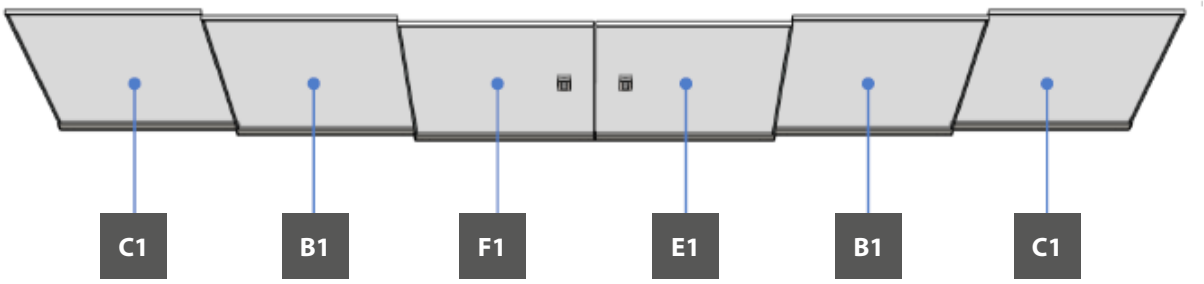

Version with lock

folding to one side

The panel with the lock is 150 mm wider than the remaining panels.

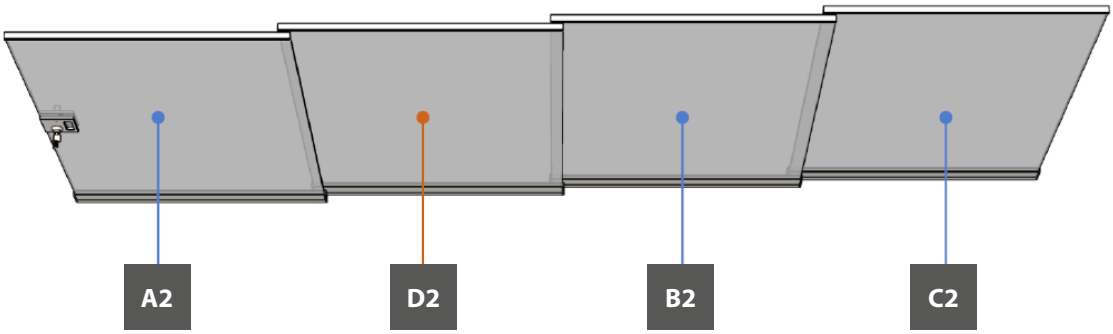

curtain-type folding

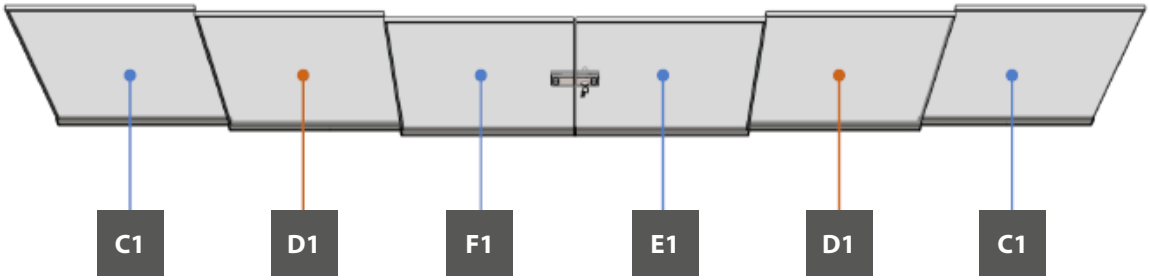

Rectangular handle 153×50 stainless

Lock A194S stainless

Lock A194D for curtain stainless

Wing screw

Rail profiles

	version 2D/2x2D	version 3D/2x3D	version 4D	version 5D (4+1L)
upper guide profile	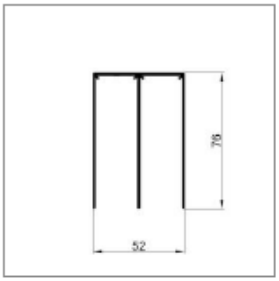	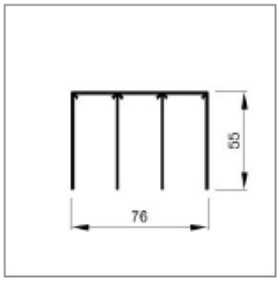	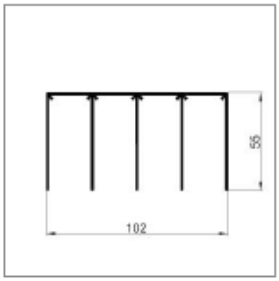	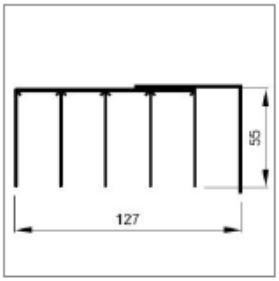
lower rail	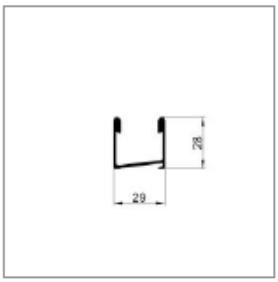	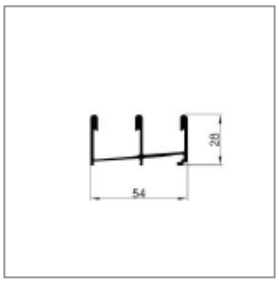	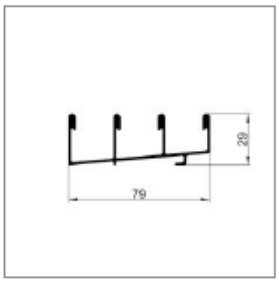	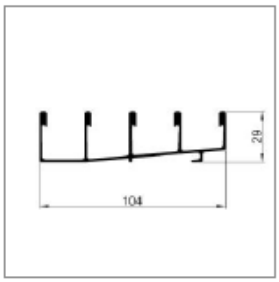

End profiles

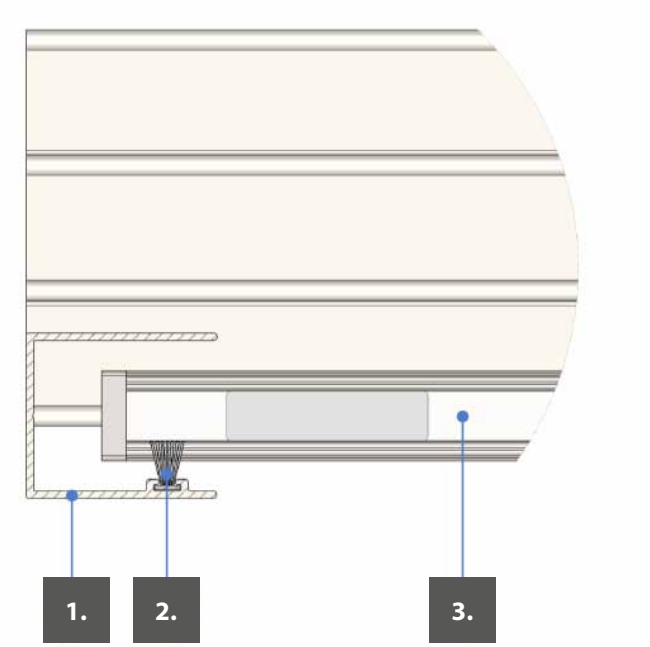

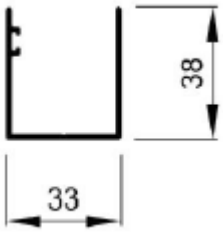

1. U-section with slot
2. Brush-type seal for U-section 4.8 × 15
3. Tempered safety glass 10 mm

Glass sealing

Silicone seal for glass

Silicone seal for glass – curtain

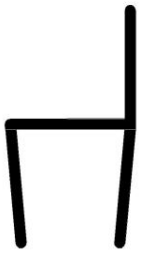

Installation

Handle and lock
Rectangular handle 153×50 stainles

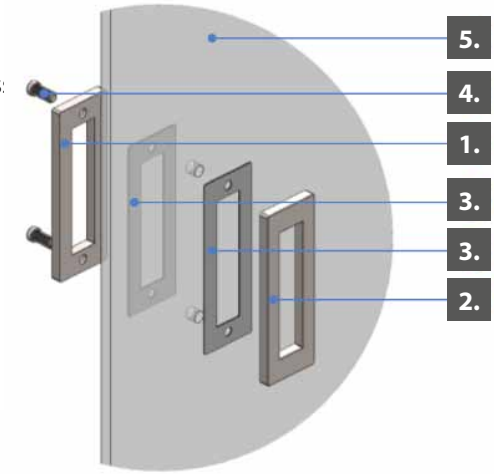

1. Handle – inner part
2. Handle – outer part
3. Handle – seal
4. Handle – screw
5. Tempered safety glass 10 mm – drilled

Lock A 194S and lock counterpart

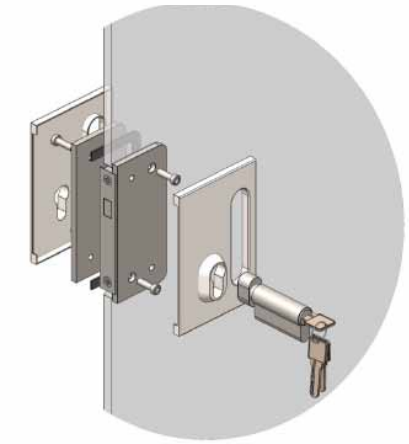

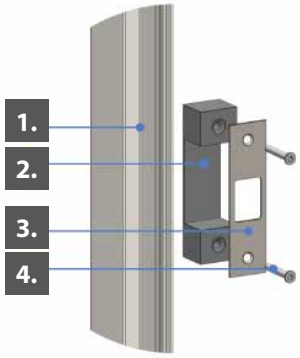

1. U-section with slot
2. Lock counterpart – plastic
3. Lock counterpart – stainless
4. Screw 3.9 × 32

Wing screw assembly

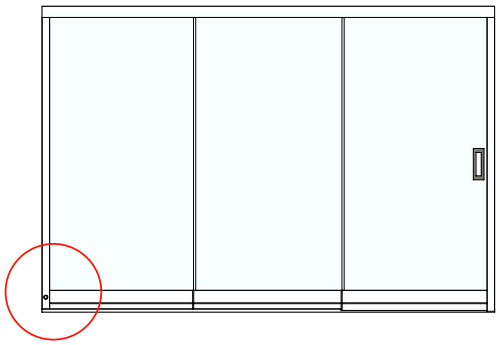

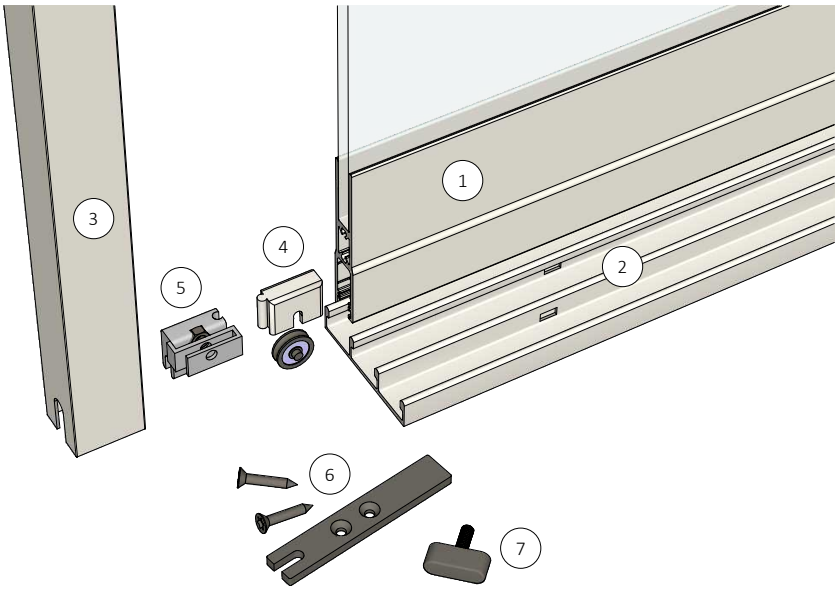

1 AluFlexi 10 wing
2 bottom rails
3 U - profile
4 carriage with bearing
5 wing screw counterpart
6 profile cover
7 wing screw

1)

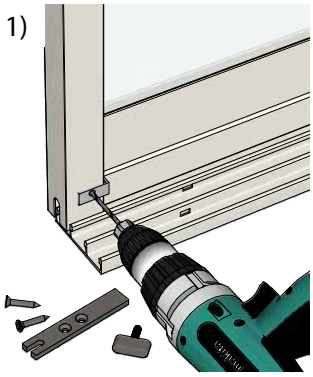

2)

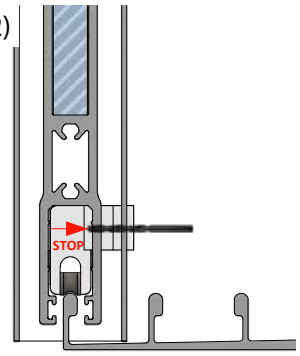

3)

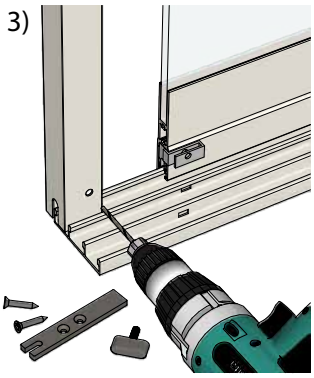

4)

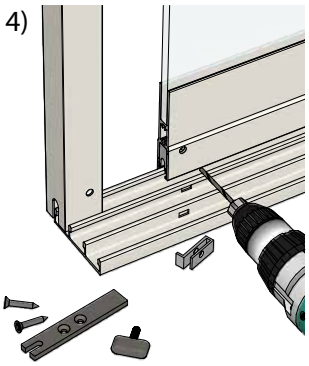

5)

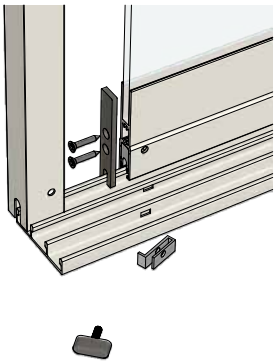

6)

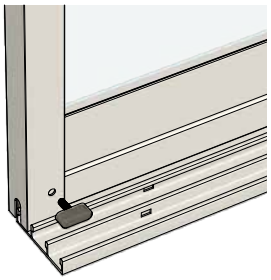

obr. 1
a) insert the wing into the U-profile
b) drill a hole in the U-profile and horizontal profile of the wing with a ø5 drill, using a drilling template
c) drilling depth is shown in figure No. 2

obr. 3
a) slide the wing out of the U-profile
b) enlarge the hole in the U-profile with a ø7 drill bit
c) clean the drilled hole with a countersink

obr. 4
a) cut the drill template from the counterpart of the wing screw
b) enlarge the hole in the horizontal profile with a ø7 drill bit
c) be careful not to damage the thread of the nut, that is inserted in the counterpart, with the drill

obr. 5
a) Install the stainless steel cover of the horizontal profile

obr. 6
a) insert the wing into the U-profile
b) secure the wing against opening with the wind screw

Assembly procedure - height-adjustable carriage

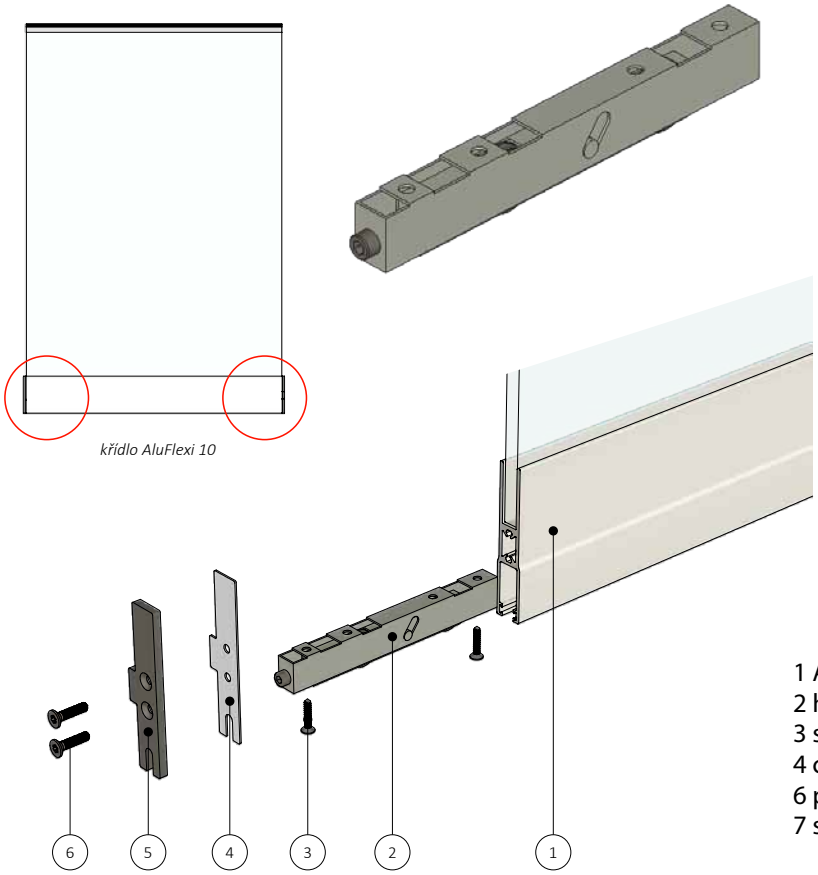

1 AluFlexi 10 horizontal profile
2 height-adjustable carriage
3 screw for attaching the carriage
4 cover pad
6 profile cover
7 screw for attaching the cover

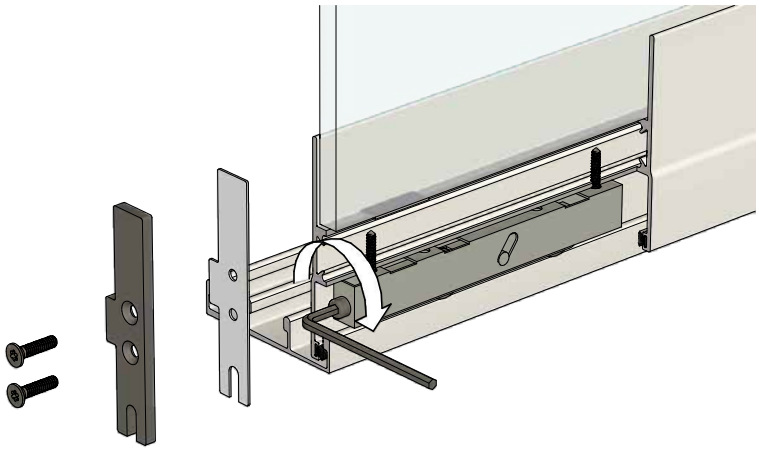

Advantages of the height-adjustable carriage:

- adjusts the vertical parallelism between sliding wings of the system
- the bottom rail does not have to be aligned to the plane
- savings on sealants and time for smoothing out construction joints between the bottom rail and the floor

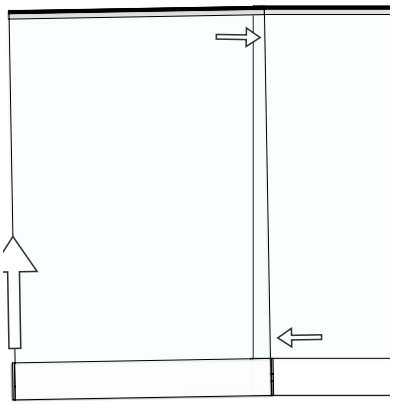

Installation process:

a) fit the sliding wings of the system to the rail
b) check vertical parallelism of the sliding wings

Wing correction using height-adjustable carriage

a) remove covers from the horizontal profile of the sliding wings
b) correction, in case the wings are not parallel, can be done using the rectification screw of the carriage

Protection against glass removal

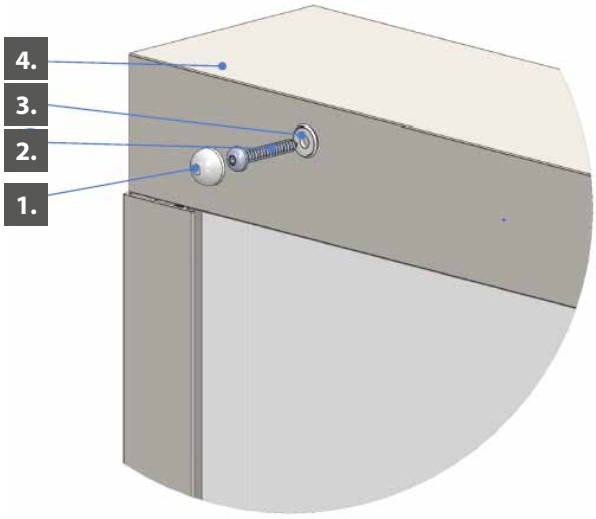

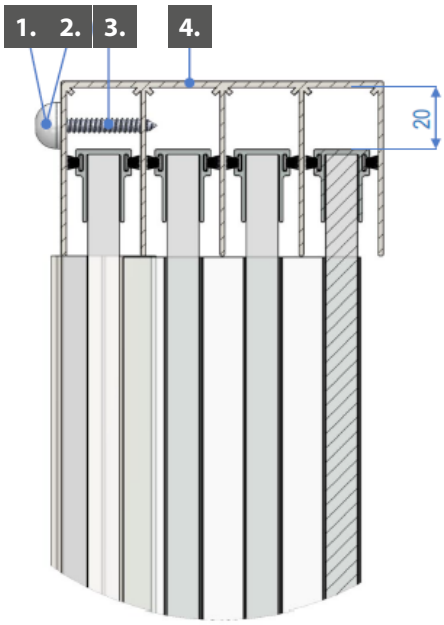

1. Round cover 12.8 plastic
2. Washer m5 12.8 plastic
3. Screw 4.8 × 32
4. Guide rail – ceiling

Anchoring plan of the system and recommended fasteners

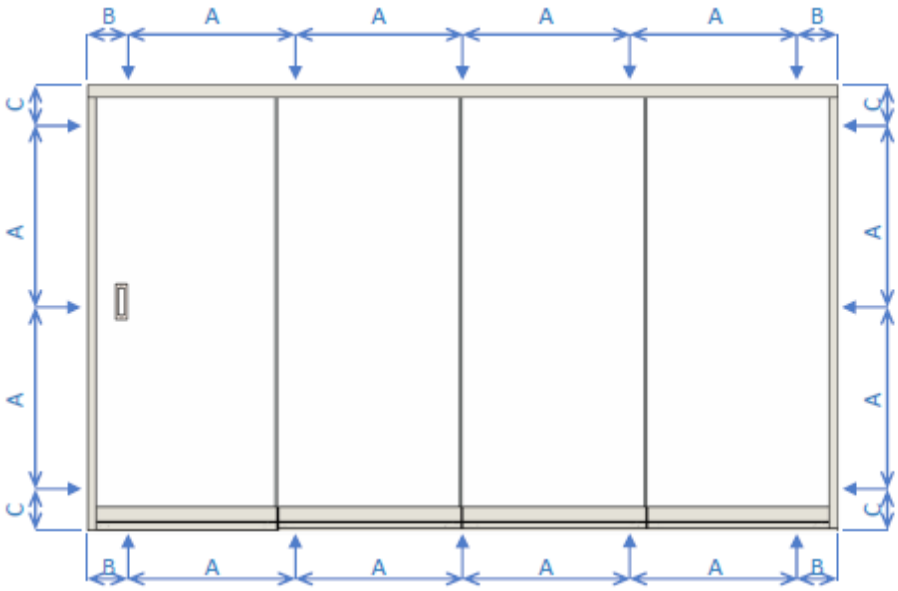

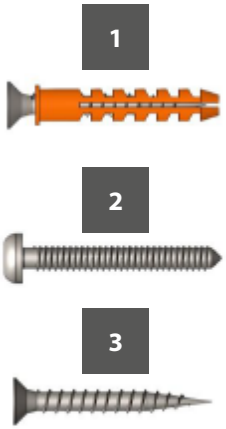

anchor hole spacing
A. max 750 mm
B. max 150 mm
C. max 300 mm

1. PLUG min. 10 × 50 + SCREW min. 6 × 50, anchoring to concrete/brick
2. SELF-TAPPING SCREW min. 6 × 30, anchoring to metallic materials
3. SCREW min. 6 × 50, anchoring to wood

ARTOSI GLASS SLIDING GLAZING SYSTEMS

Measuring the building opening

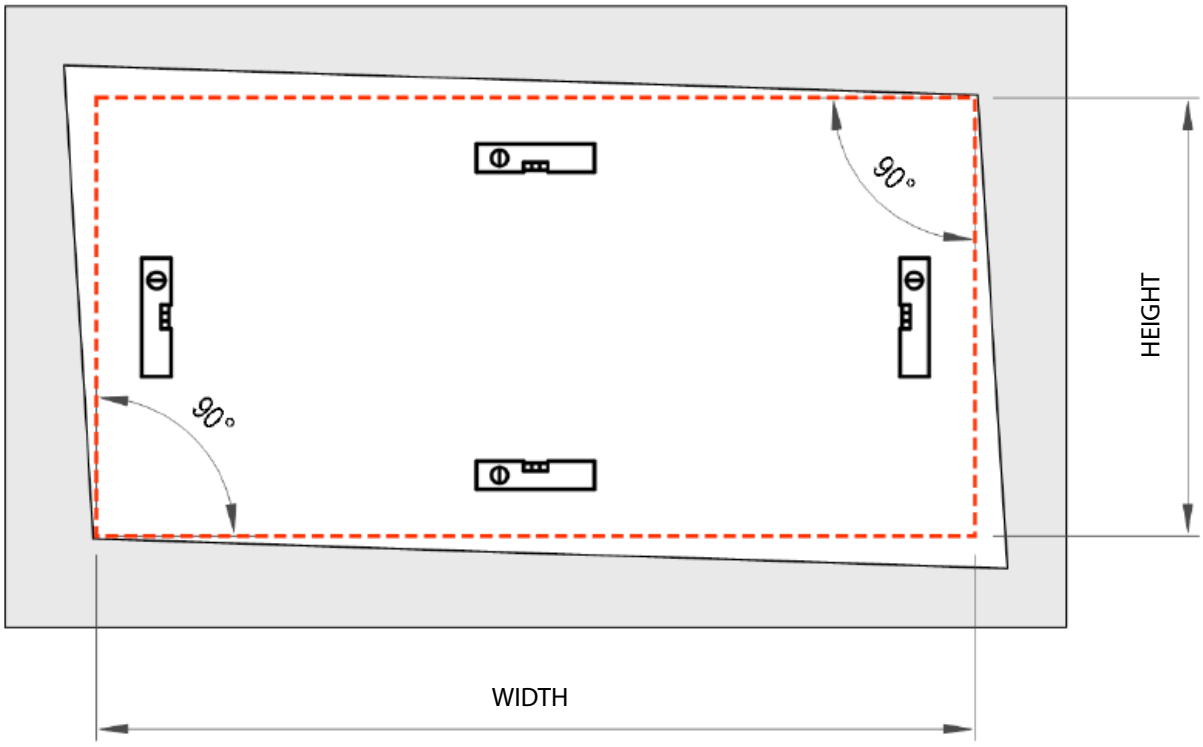

1. The substrate for the glazing system installation must have sufficient load-bearing capacity and be consolidated and free of cracks.
2. If the glazing system is to be installed in existing metallic structures, the frames and anchoring elements must be free of corrosion and there must be no horizontal and vertical deflection.
3. The glazing system dimensions are determined by the smallest building opening dimension measured.

Description of the sliding system elements

The individual sliding system elements may differ visually depending on the system and version.

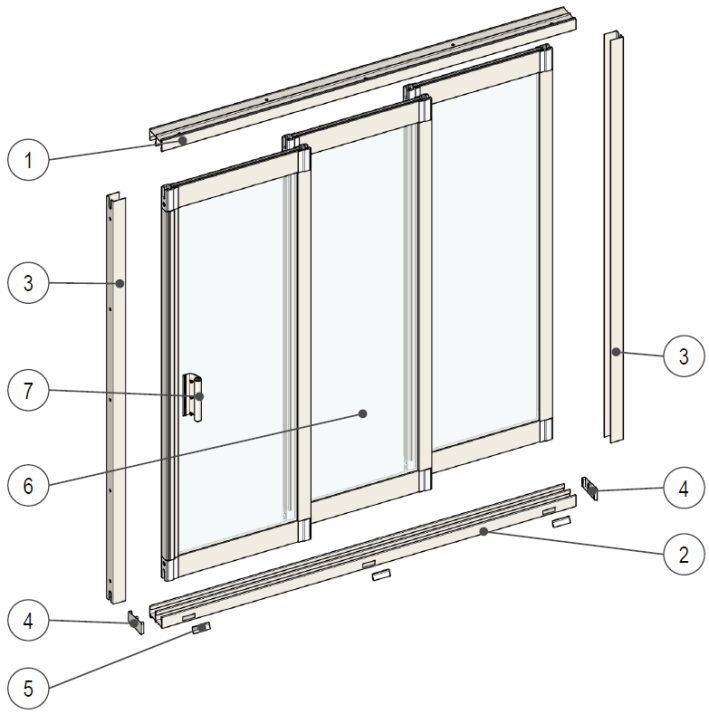

1. Upper rail
2. Lower rail
3. Stop profile
4. Stop cover
5. Drain point cover
6. Sliding wing
7. Handle

Lower rail profiles

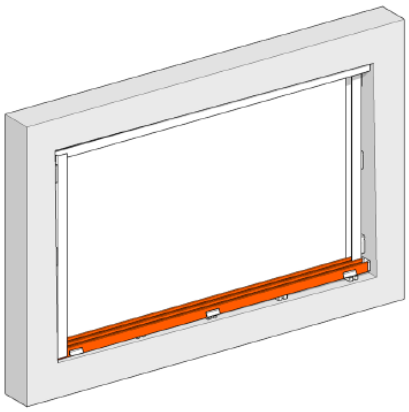

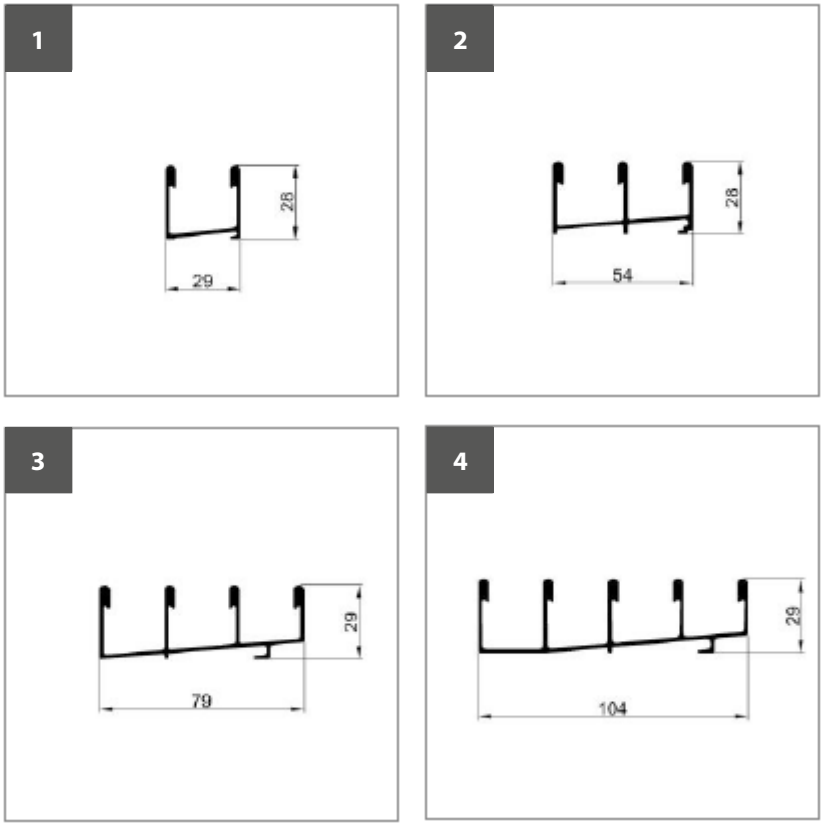

1. 2-rail profile standard
2. 3-rail profile standard
3. 4-rail profile standard
4. 5-rail profile standard

Upper rail profiles

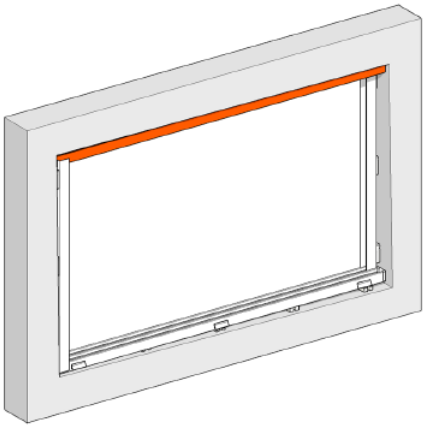

Frame system
1. 2-rail profile standard
2. 3-rail profile standard
3. 4-rail profile standard
4. 5-rail profile standard

Frameless system
1. CEILING GUIDE PROFILE-2
2. CEILING GUIDE PROFILE-3
3. CEILING GUIDE PROFILE-4
4. CEILING GUIDE PROFILE-4, PROFILE L 60 × 60 × 2 (4 + 1 L)

Frame system

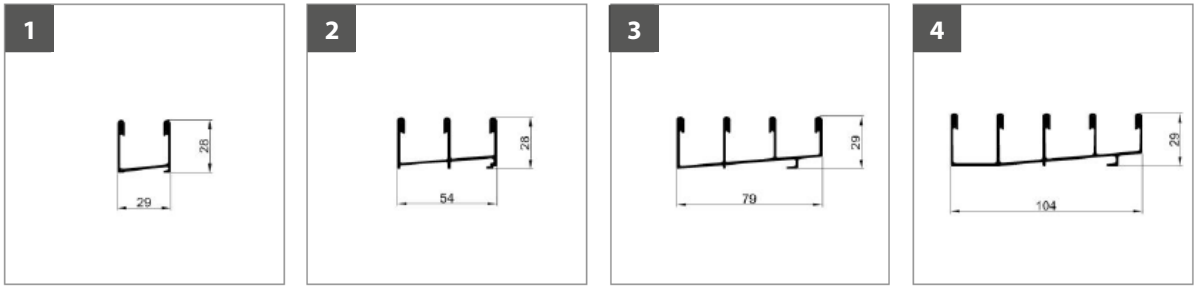

Frameless system

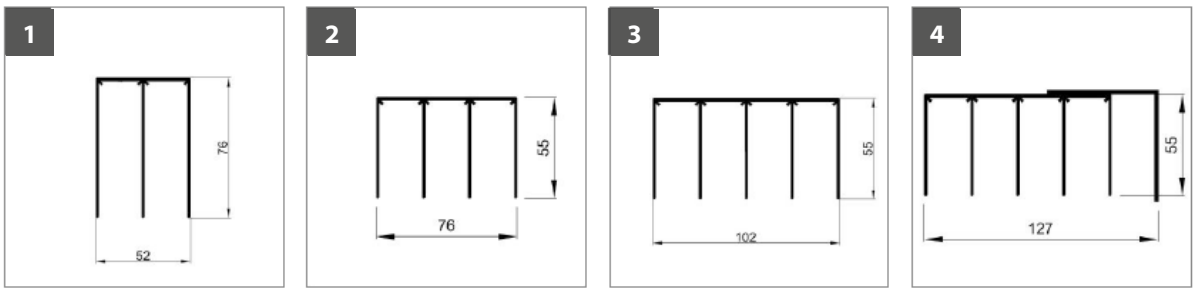

Stop profile
U-profile – with a groove for sealing for the frame system

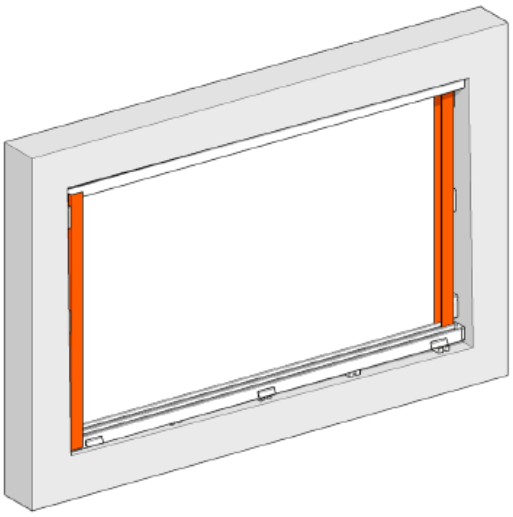

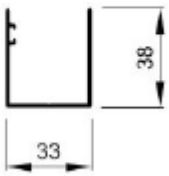

Other accessories

Levelling plate
1 mm

Levelling plate
3 mm

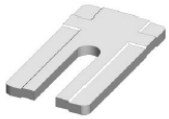

Levelling plate
5 mm

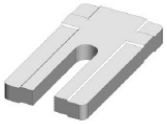

Levelling plate
10 mm

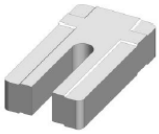

Lockable metallic handle
for frame system

Normal handle
for frame system

Stainless grip
for frameless system

Stainless grip with lock
for frameless system

Wing screw

Anchoring holes

stop profiles

rail profiles

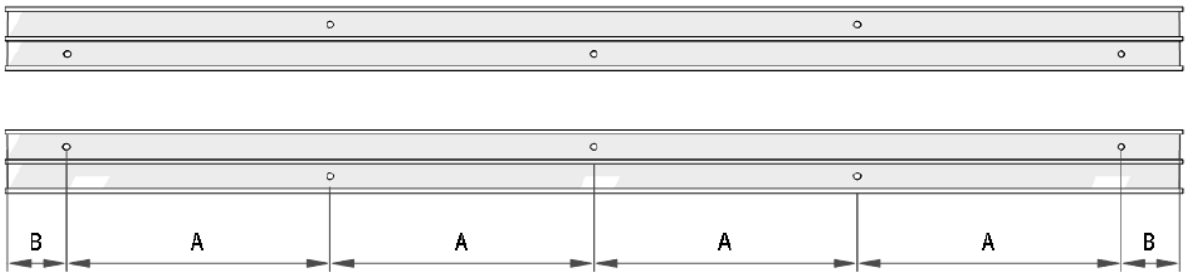

Anchors to materials	Anchor type	Max. spacing of anchoring points A (mm)				
		Wind area				
		I	II	III	IV	V
concrete, stone, sild brick	plastic wall plug ø 8 × 46 + screw ø 6 mm, inox A2	900	700	600	500	350
perforated brick	plastic frame wall plug ø 10 × 80 + incl. screw	900	800	700	550	400
porous concrete, gas silicate	plastic frame wall plug ø 10 × 80 + incl. screw	700	550	450	350	250
steel profile, th. min. 2 mm	self-tapping screw ø 4.8 + steel 8.8 - galv. zinc-pl.	950	900	800	750	500
aluminium profile, th. min. 2 mm	self-tapping screw ø 4.8 + inox -A2	800	600	500	400	300
solid timber	screw ø 5 mm + inox -A2	800	600	500	400	300

max. spacing B: 150 mm

Anchor elements

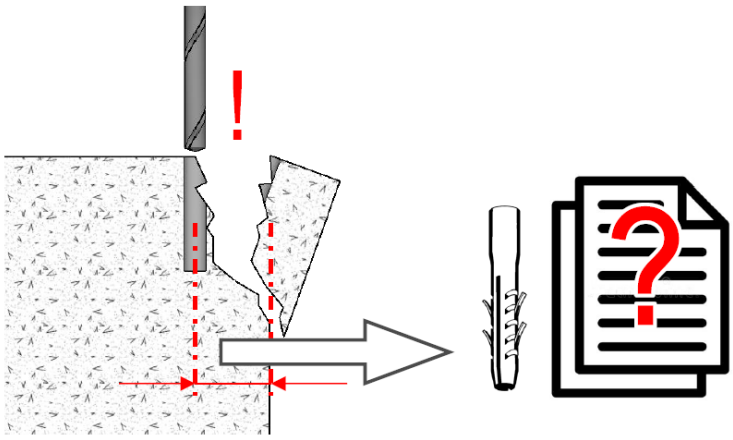

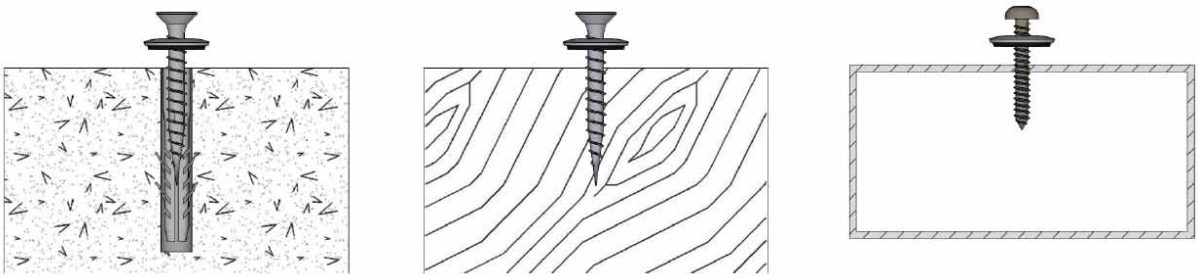

Lower rail profile

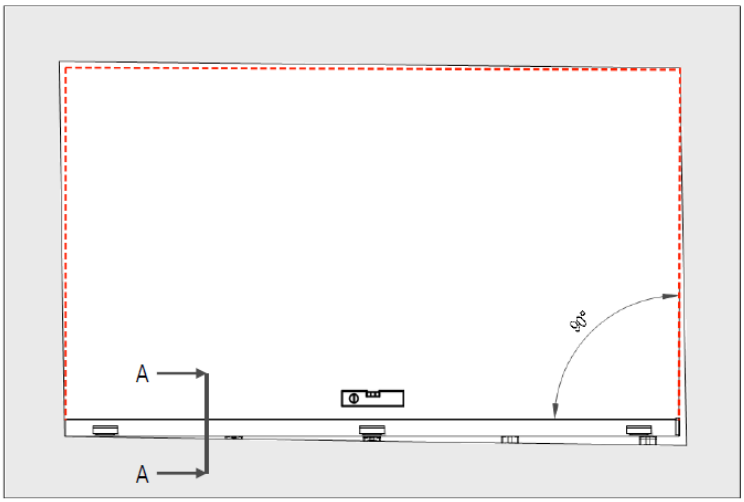

Exterior view

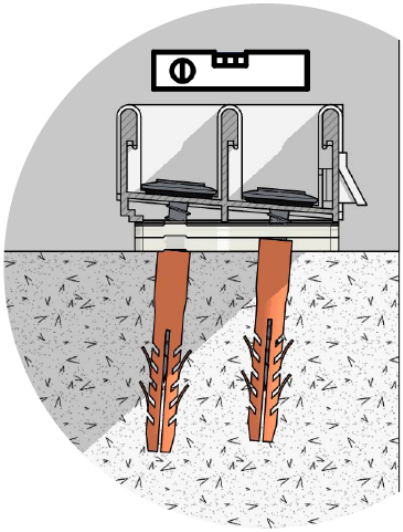

1

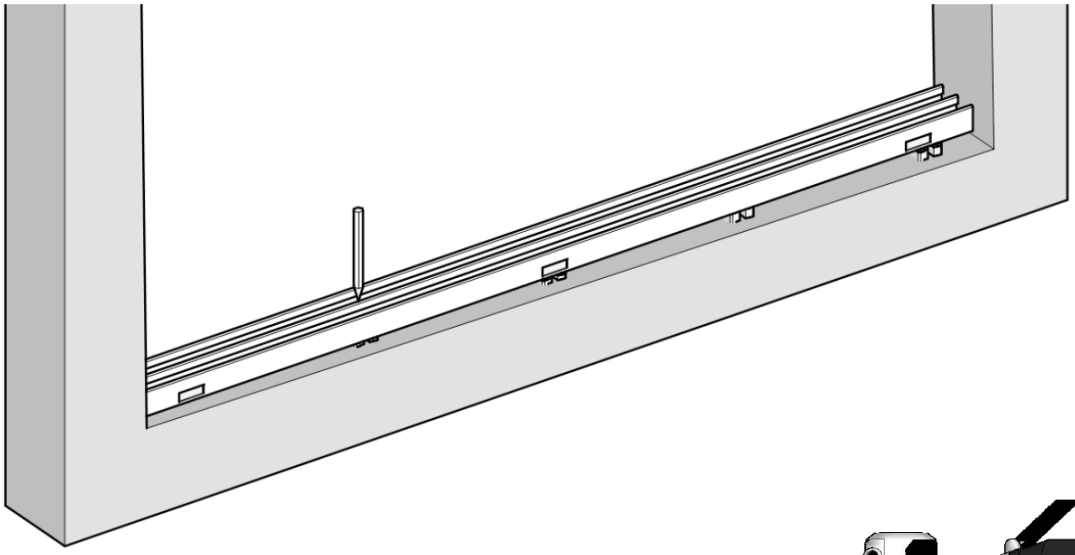

2

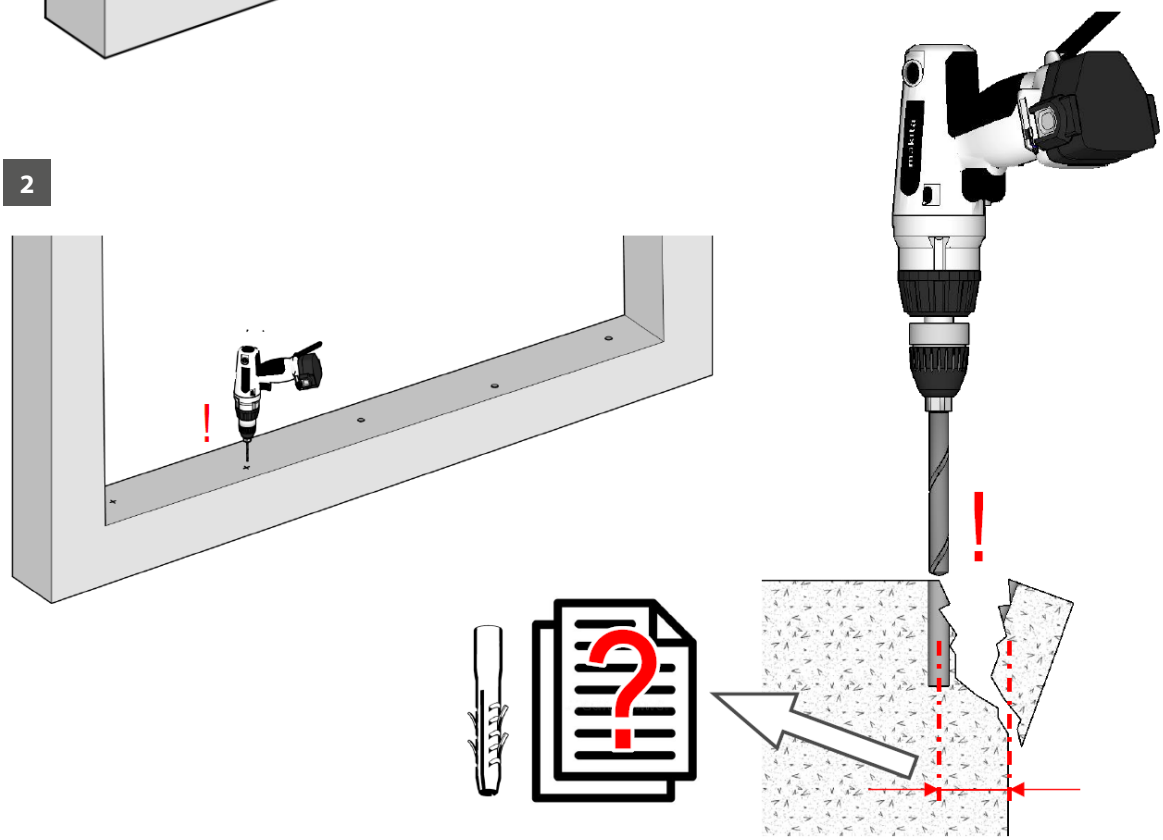

3

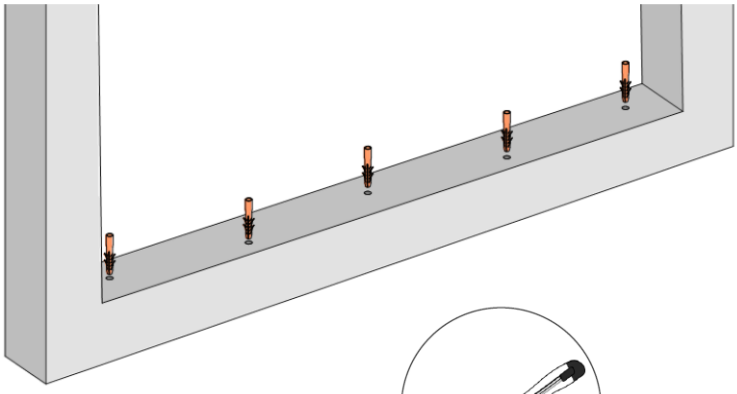

4

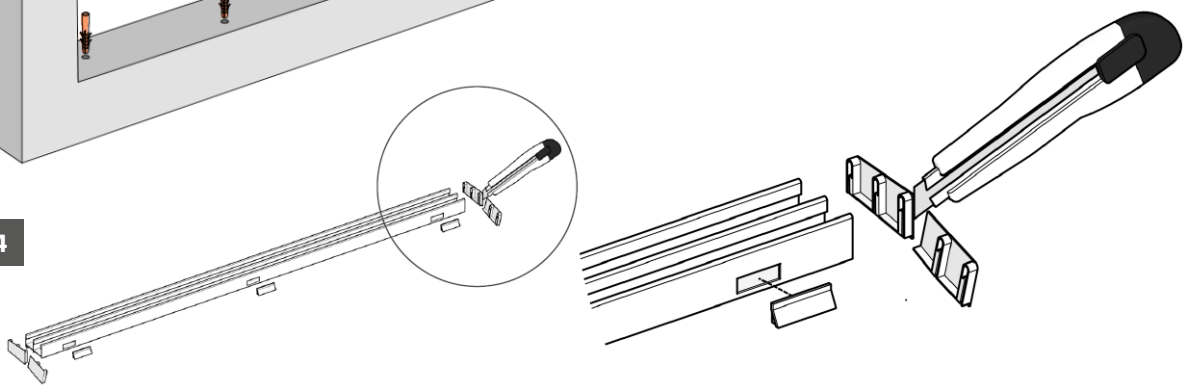

5

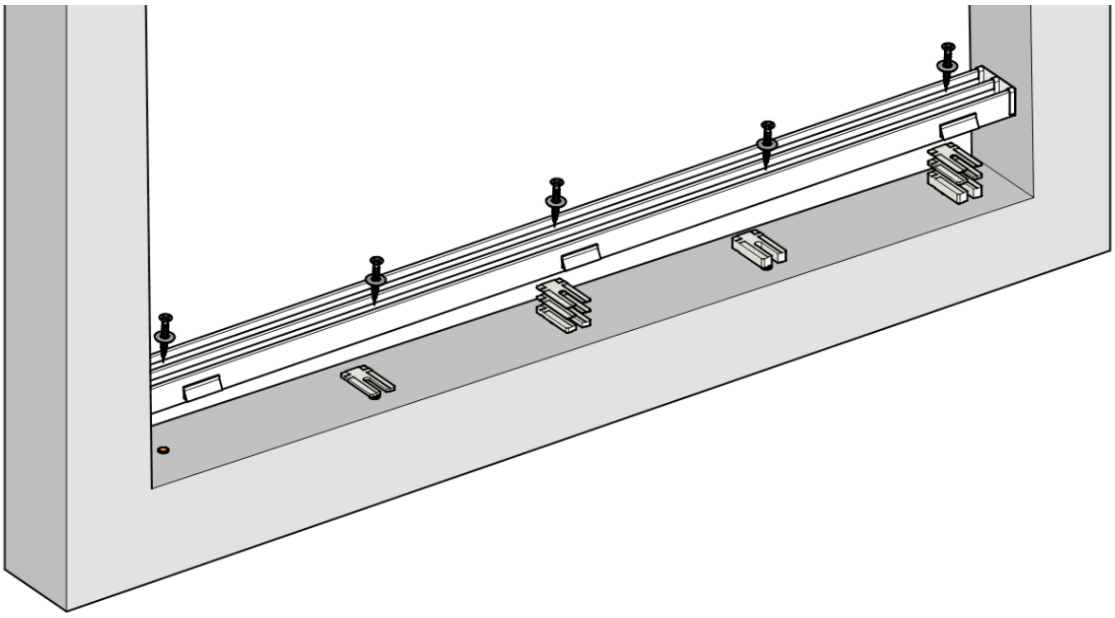

Upper rail profile

Frame system

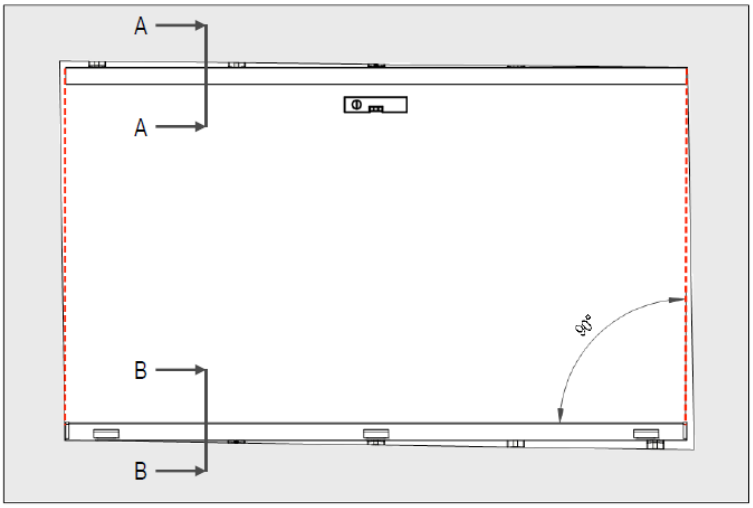

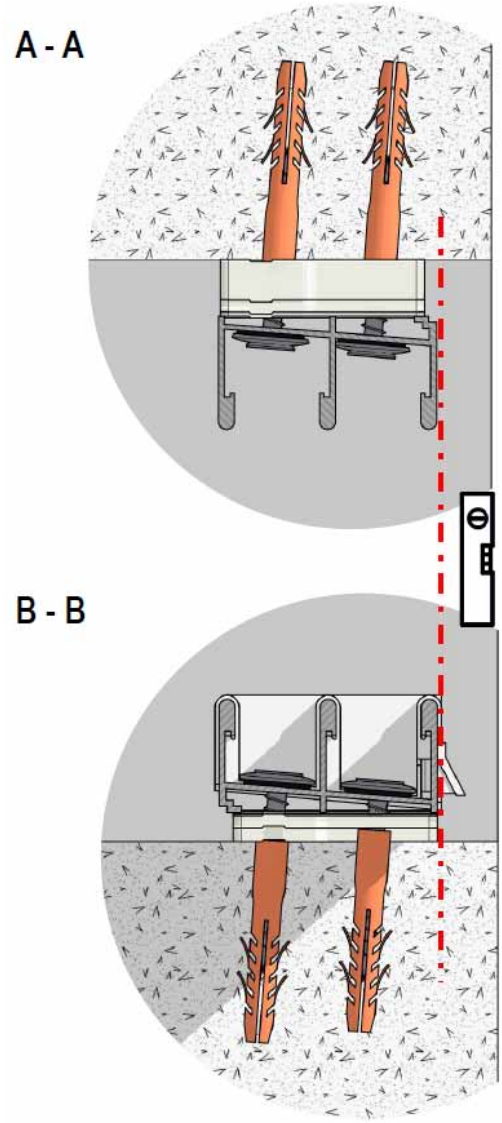

Repeat procedure from “Lower rail profile” 1, 2, 3, 4

Upper rail profile

Frameless system

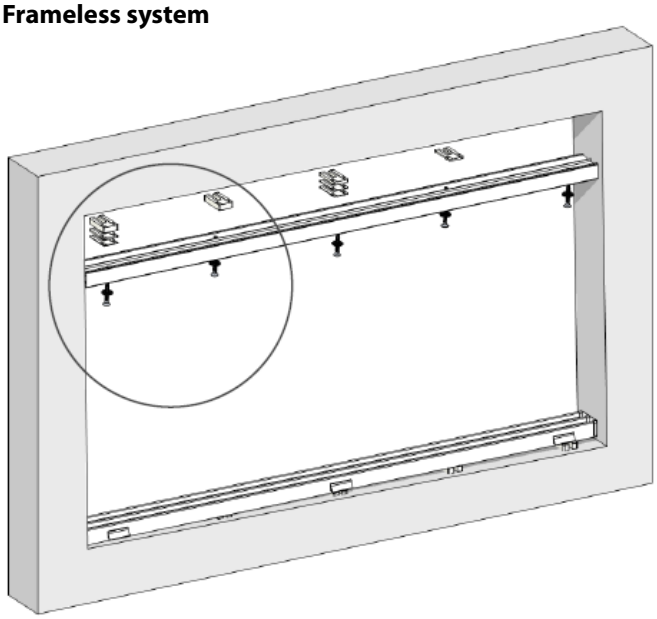

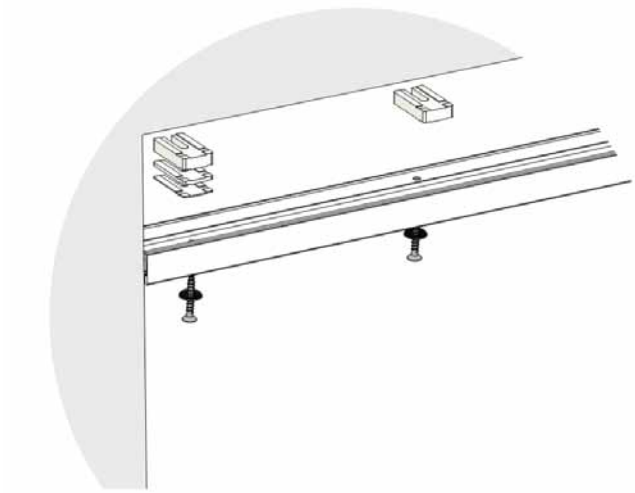

Upper rail profile

Frameless system

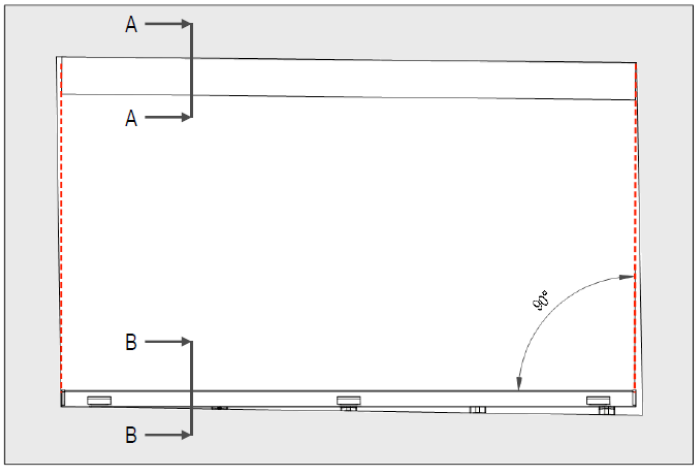

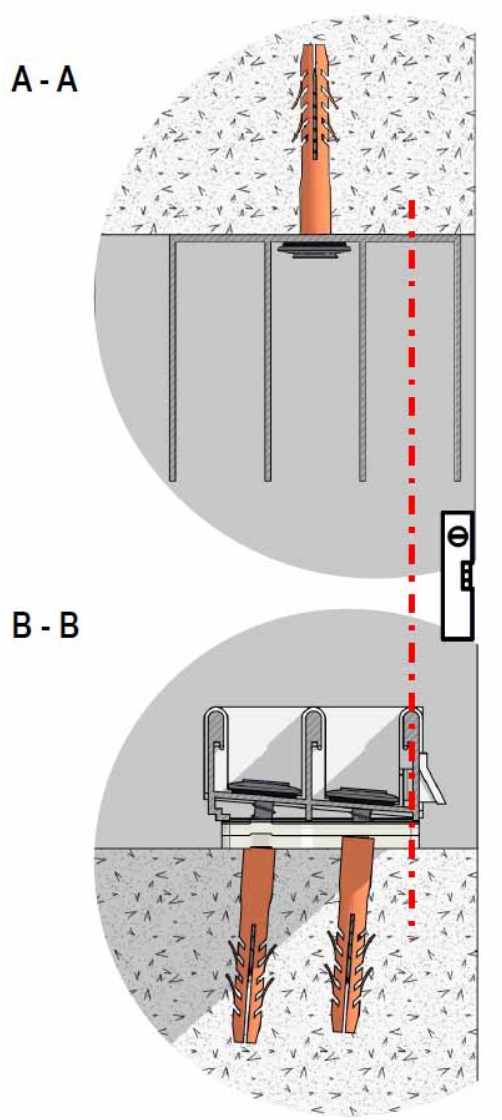

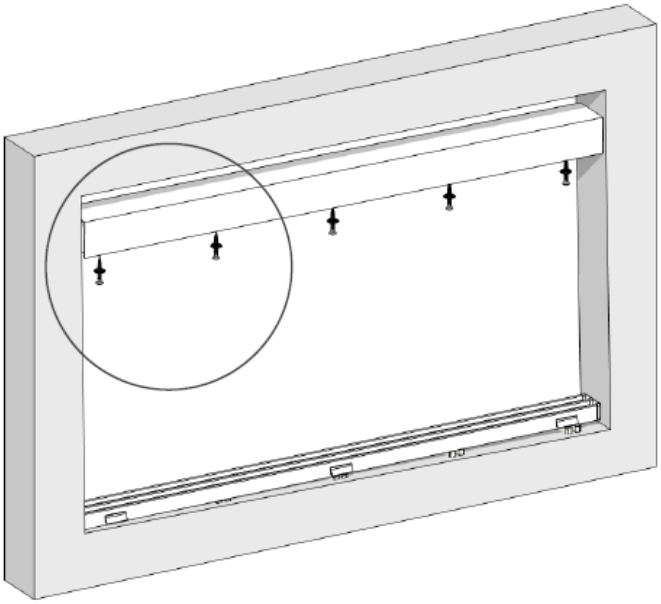

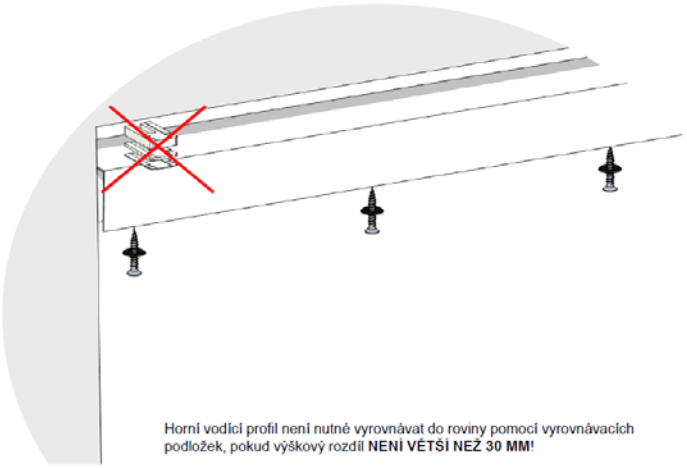

Repeat procedure from "Lower rail profile" 1, 2, 3, 4.

It is not necessary to level up the upper guide profile by levelling plates if the height difference DOES NOT EXCEED 30 MM!

Stop profiles

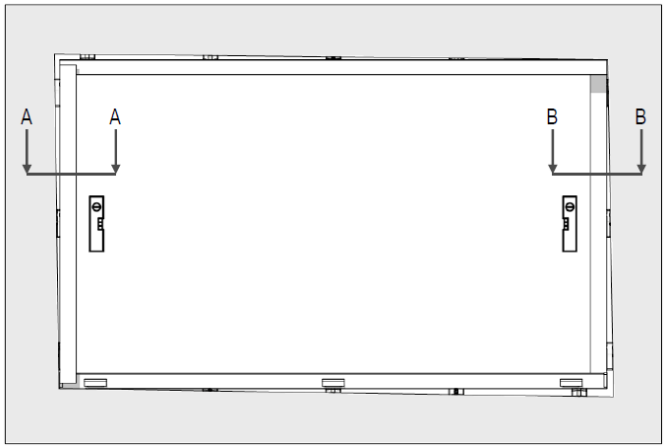

SECTION THROUGH A - A

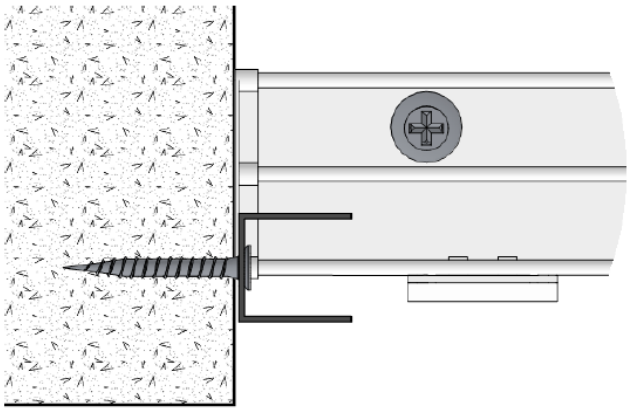

SECTION THROUGH B - B

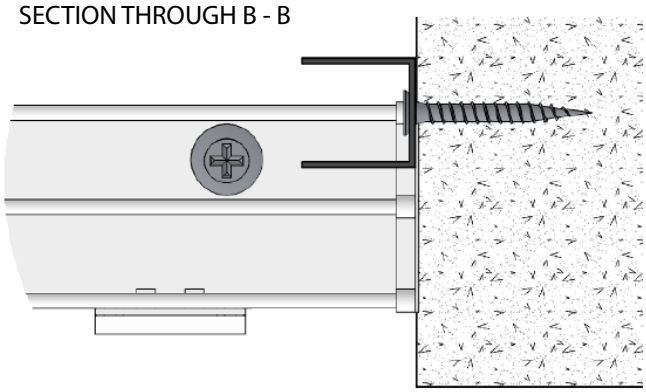

1

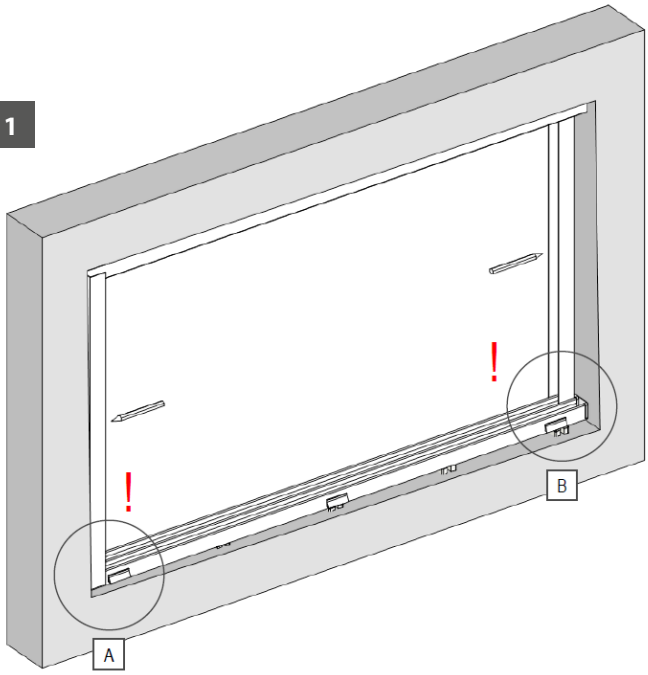

A

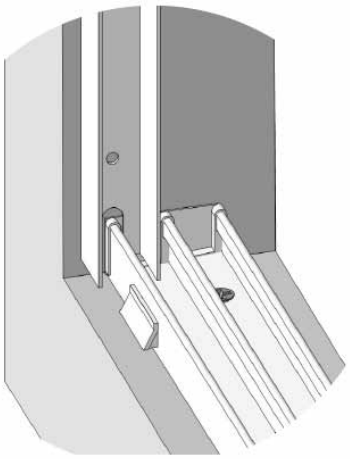

B

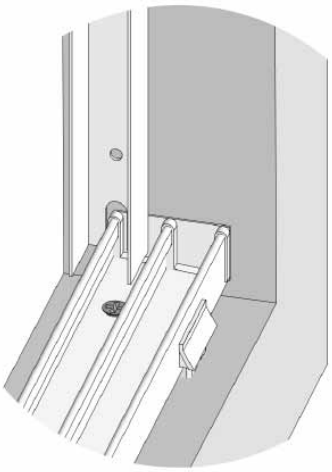

2

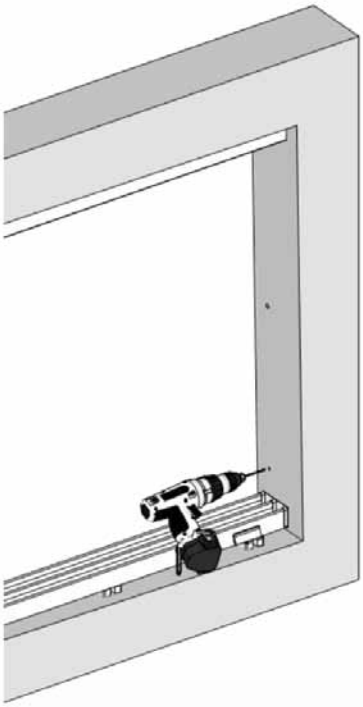

3

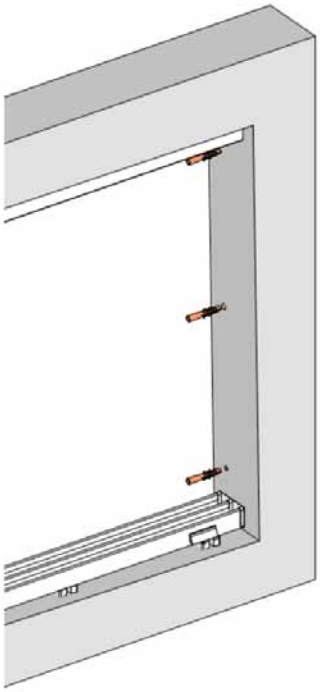

4

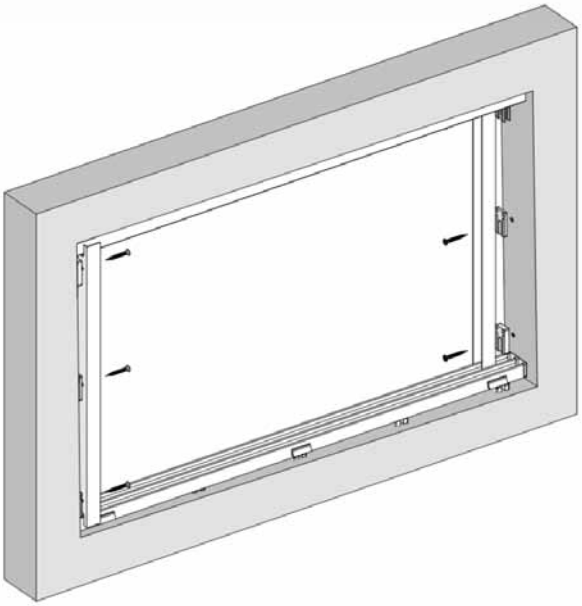

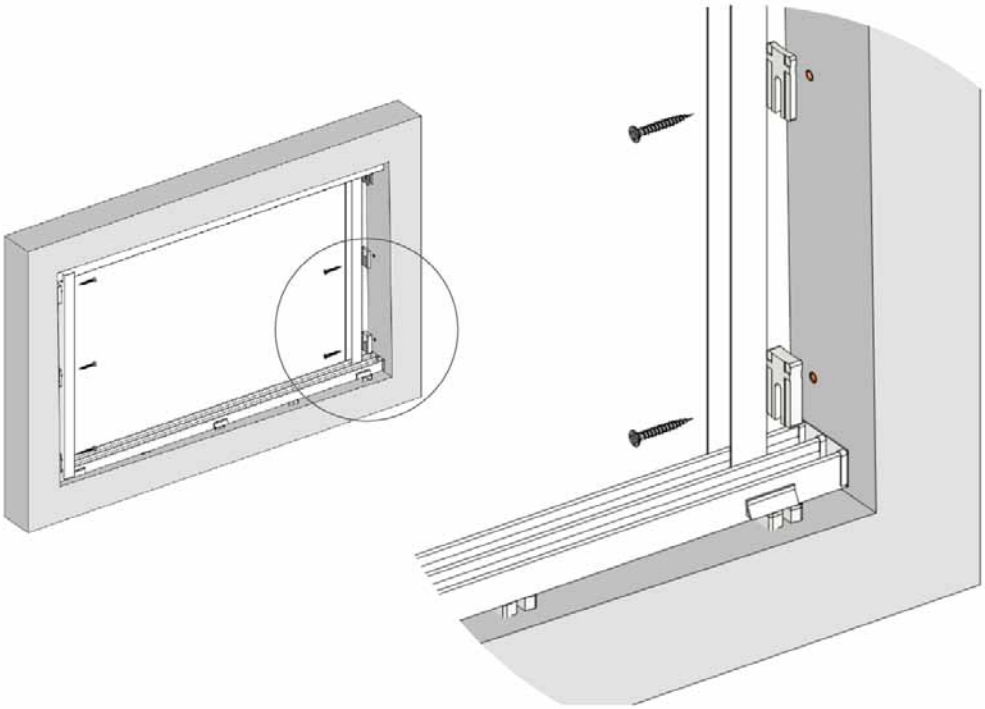

Sliding wing

Frame system

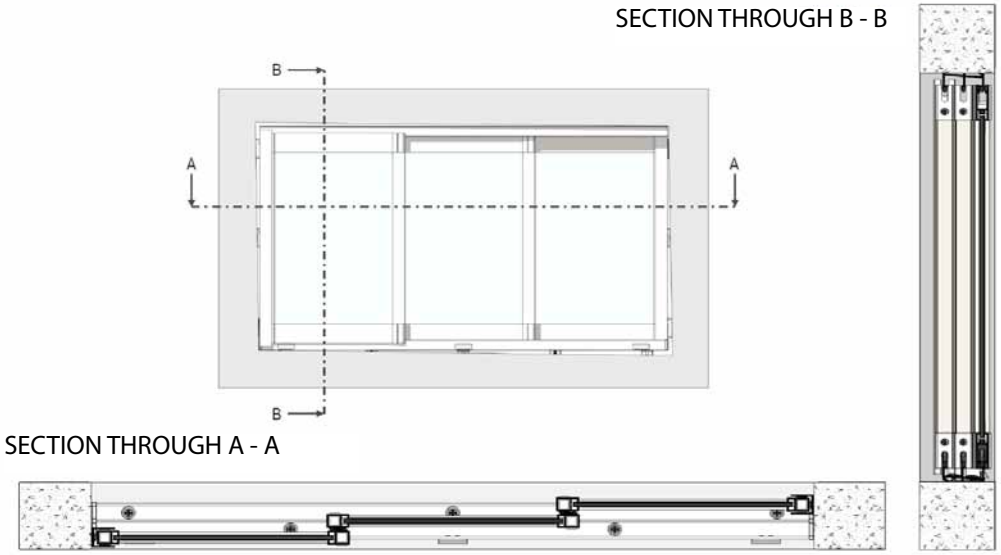

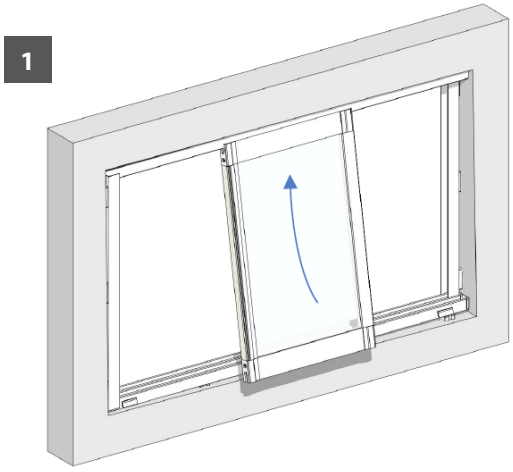

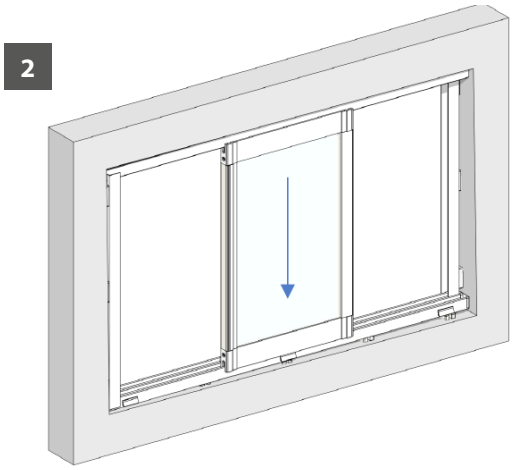

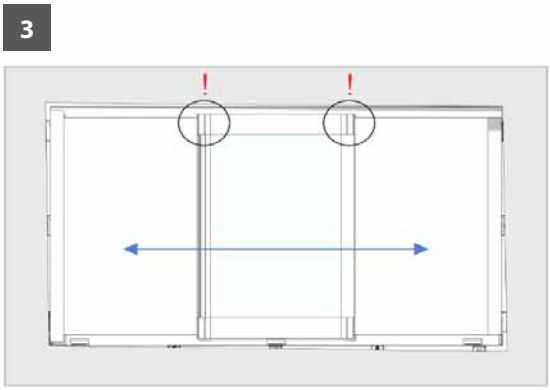

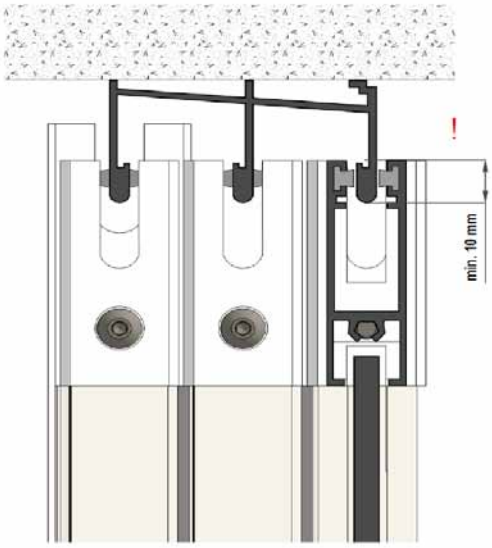

1. Check the wing overlap against the upper rail (Fig. 1) over the whole glazing length of the installed sliding wing.
2. Repair by lowering (addition of levelling plates) or raising (removal of levelling plates) the upper rail in places where the wing embedding is not optimal.
3. Install the remaining sliding system wings.

Frameless system

(only Fig. 3 is different for the frameless system)

4

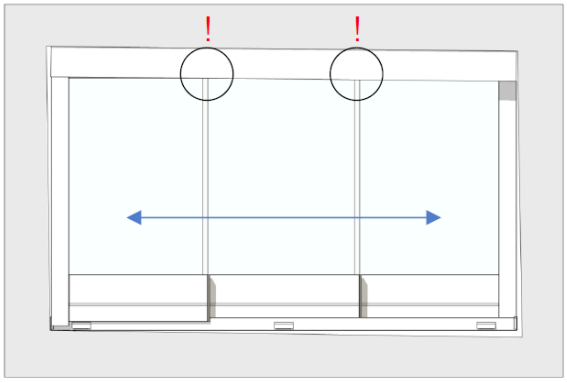

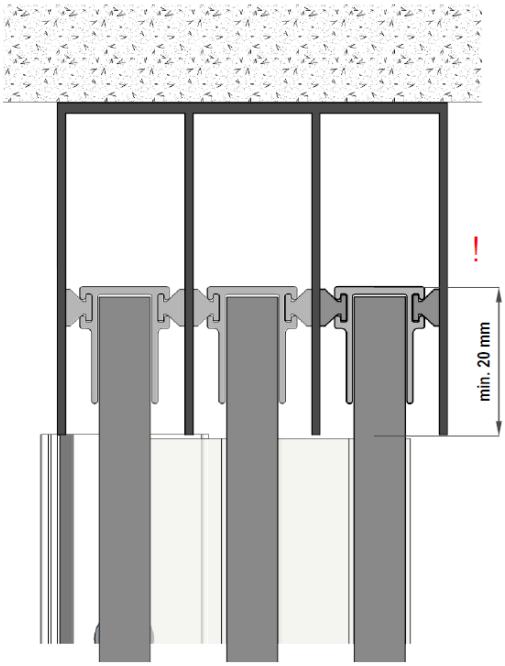

1. Check the wing overlap against the upper rail (Fig. 1) over the whole glazing length of the installed sliding wing.
2. Repair by lowering (addition of levelling plates) or raising (removal of levelling plates) the upper rail in places where the wing embedding is not optimal.
3. Install the remaining sliding system wings.

Finishing treatment

Finishing the connecting joint

1

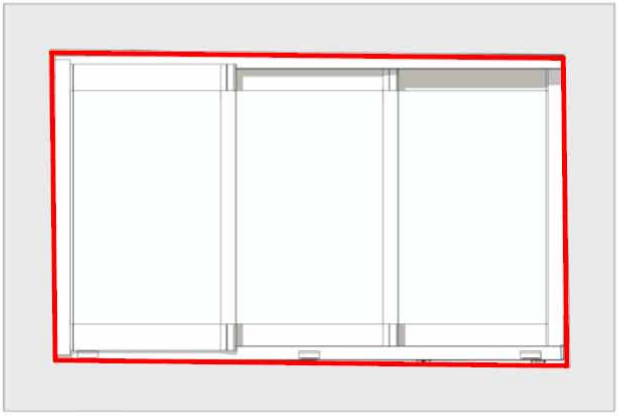

A

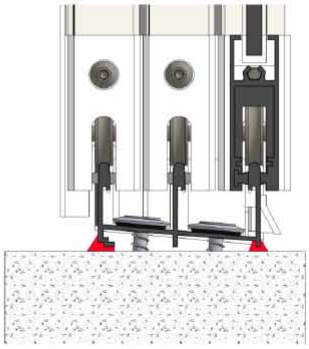

B

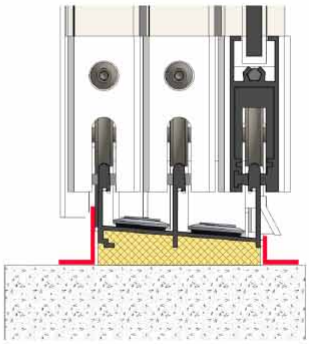

1. Connecting joints up to 5 mm (Fig. A) should be finished from the interior or exterior using silicone or acrylic sealant.
2. In case of joints exceeding 5 mm (Fig. B), we recommend filling the joint with PU foam and then cover the joint with aluminium bars after the foam has hardened and been trimmed.
3. The bars can be attached by a suitable weather-resistant binding material.

ARTOSI SLIDE PANELS

- Own development and manufacture
- Clean and elegant design
- Colour coordinated with the ARTOSI pergola and ALFA screen shutter
- Easy installation thanks to pre-assembled system
- Easy and fast operation and maintenance
- Selection of the number of wings and methods of opening
- Selection of various types of panels and their combinations

ISOTRA *Quality*

ARTOSI SLIDE PANELS

Základní specifikace

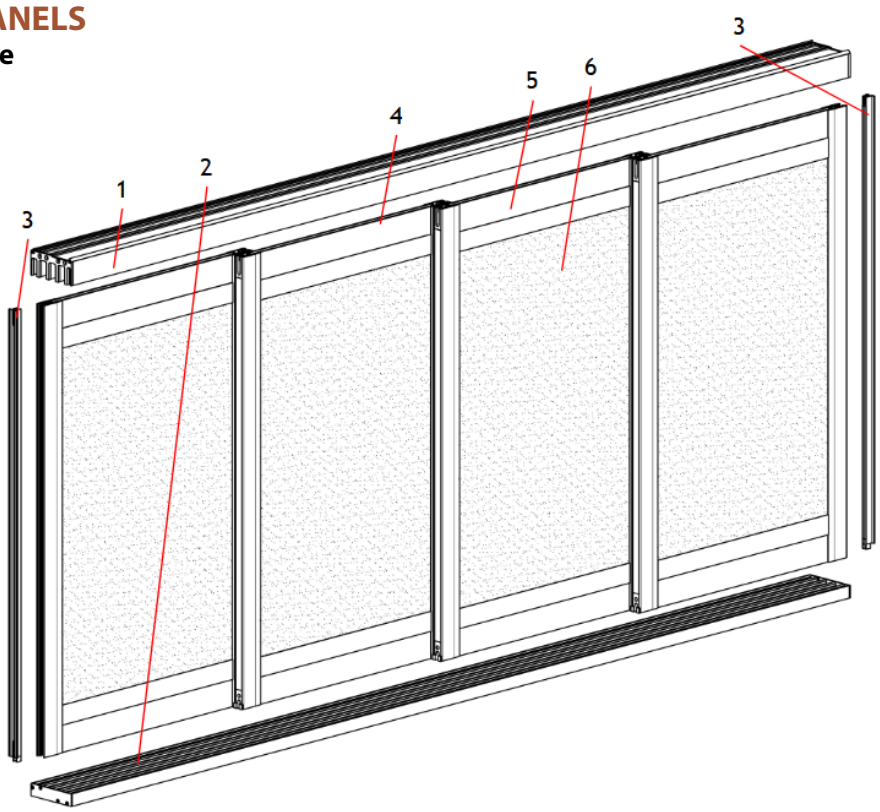

Basic description

1 – Upper rail
2 – Lower rail
3 – Stop profile
4 – Panel
5 – Panel frame
6 – Panel filling

Colour design

Upper rail, Lower rail, Panel frame, Slats

RAL 9006	White aluminium
RAL 9006S	White aluminium structure
RAL 9007	Grey aluminium
RAL 9007S	Grey aluminium structure
RAL 9010M	Pure white matt
RAL 9010S	Pure white structure
RAL 7016M	Anthracite grey matt
RAL 7016S	Anthracite grey structure
RAL 8014M	Sepia brown matt
RAL 8014S	Sepia brown structure
DB 702	Pearled silver grey
DB 703	Pearled dark grey

NOTE: Other RAL colours on request for an extra charge.

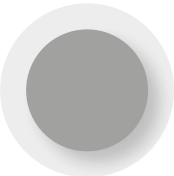
RAL 9006

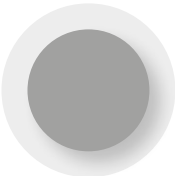
RAL 9006 S

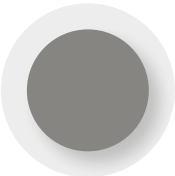
RAL 9007

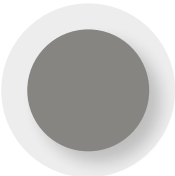
RAL 9007 S

RAL 9010 M

RAL 9010 S

RAL 7016 M

RAL 7016 S

RAL 8014 M

RAL 8014 S

DB 702

DB 703

DECORAL

Decoral may only be selected for slats in the SLOPE, SLOPE ROTATING, FIX, FIX SCREEN panels.

SCREEN fabrics

Screen fabrics may only be selected for the SCREEN and FIX SCREEN panels.
Available fabrics: SLTZ89 and SLTZ 92

Definition

The ARTOSI SLIDE PANELS system is an assembly of aluminium panels installed between the upper and lower rails. The panels are equipped with wheels that allow movement over the lower rail. The weight of the panels is transferred to the lower rail through the wheels, while the upper rail is intended for guiding. The individual panels are placed on the rails one behind the other, the panels move behind each other when opening. The panels consist of a frame in which various kinds of fillings may be placed. The ARTOSI SLIDE PANELS are intended for installation in openings in supporting structures, especially pergolas and carports, where they serve as side panels.

The ARTOSI SLIDE PANELS system is a shading element and its primary function is providing shade. It does not replace doors and door structures in building openings.

The sliding system does not ensure 100 % water-, snow-, and wind-tightness.

Wind is likely to cause vibration and deflection of the panels. Vibration may be both audible and visible. Panel deflection is reversible and does not affect functionality of the system.

Depending on the kind of filling, the weight of one panel may be up to 50 kg. This weight must be taken into account when selecting the anchoring method and assessing the bearing capacity of the substrate. Pay increased attention to situations when all the panels are moved to one side. The substrate for the system installation should be flat, sufficiently load-bearing, compact and crack-free.

Pay attention to the supporting structure to which the upper rail of the system is attached. In case of deflection of the structure, the upper rail is likely to come into contact with the panels, causing the transfer of loading from the supporting structure to the panels. This loading will prevent the panels from moving, or even cause irreversible damage to the panels. This situation is likely to occur in case of installation into a pergola with subsequent excessive loading of the pergola roof by snow.

Standard dimensionsv

	Width S (mm)		Height H (mm)	
	min.	**max.**	**min.**	**max.**
Opening to be filled	1000	7000	550	2700
Individual panel	500	1250	550	2700

For detailed information about available dimensions, see Technical Specification

Building dimensions

"S" – opening width
"H" – opening height

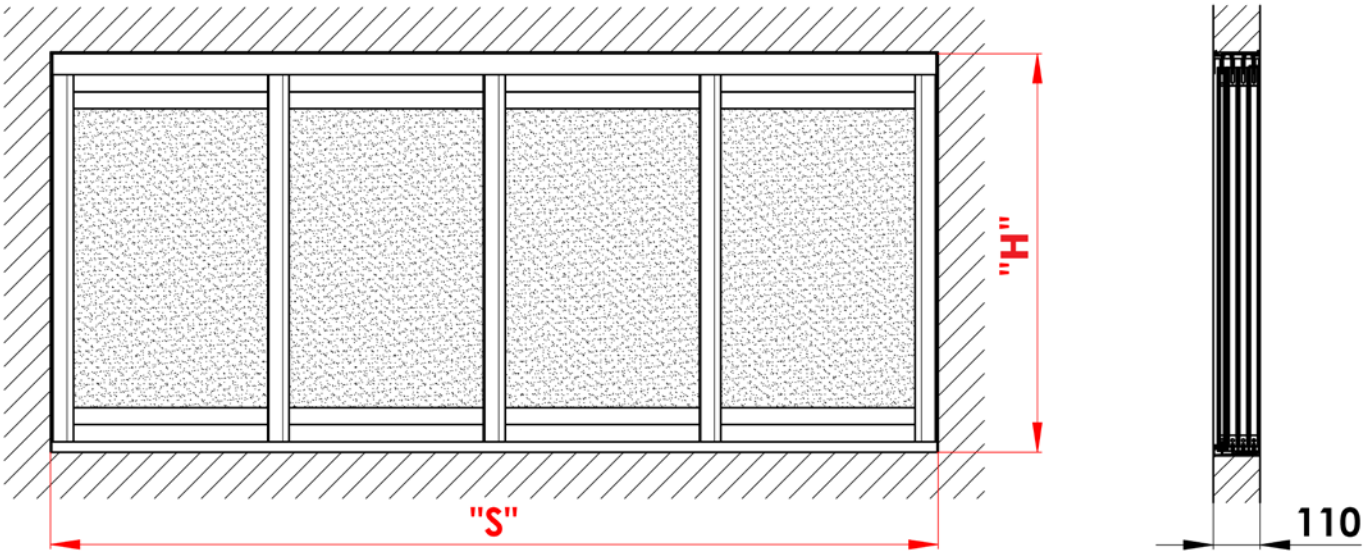

Linear expansion of aluminium profiles

When heated, aluminium exhibits a characteristic expansion, called heat dilatation. The coefficient of thermal expansion of an aluminium alloy is 23.5 [µm/(m * K)].

Example of heat dilatation:

An aluminium profile measures 7,000 mm at 20 °C. If heated to 50 °C (a sliding system on a sunny day), it will measure 7,005 mm due to thermal expansion, i.e., the change in the aluminium temperature will translate to a +5 mm increase in length.

Attention:

When designing and installing the sliding systems, it is **necessary to take into account thermal expansion of the aluminium elements,** i.e., of the sliding profiles as well as adjacent supporting structures to which these systems are anchored. It is important to take into account thermal expansion of the aluminium profiles in relation to the ambient temperature when measuring and installing the system.

We therefore recommend taking the measurements at an ambient temperature of 23 °C ±5 °C.

Dimensional tolerance

Length	Tolerance	Width	Tolerance
up to 2000 mm	± 2.4	up to 2000 mm	± 2.4
up to 3000 mm	± 2.6	up to 3000 mm	± 2.6
up to 4000 mm	± 2.8	up to 4000 mm	± 2.8
up to 5000 mm	± 3	up to 4500 mm	± 3
up to 6000 mm	± 3.2		
up to 7000 mm	± 3.4		

Technical Specification

Panel layout: folding to the left

Opening size	Width S (mm)		Height H (mm)	
	min.	max.	max.	max.
2 panels (2-L)	1000	2500	550	2700
3 panels (3-L)	1500	3750	550	2700
4 panels (4-L)	2000	5000	550	2700

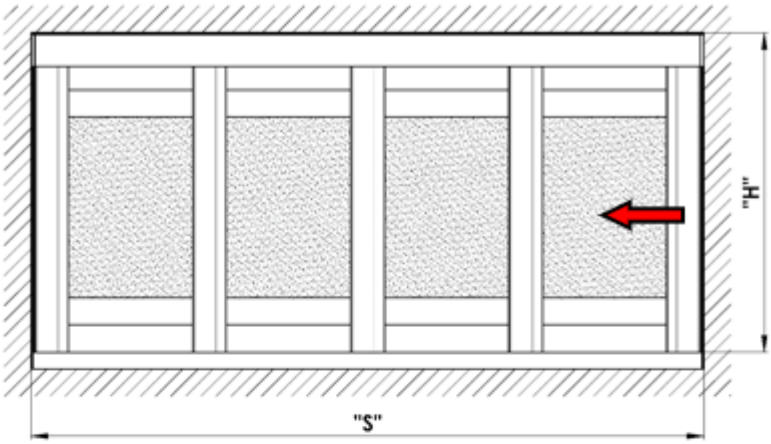

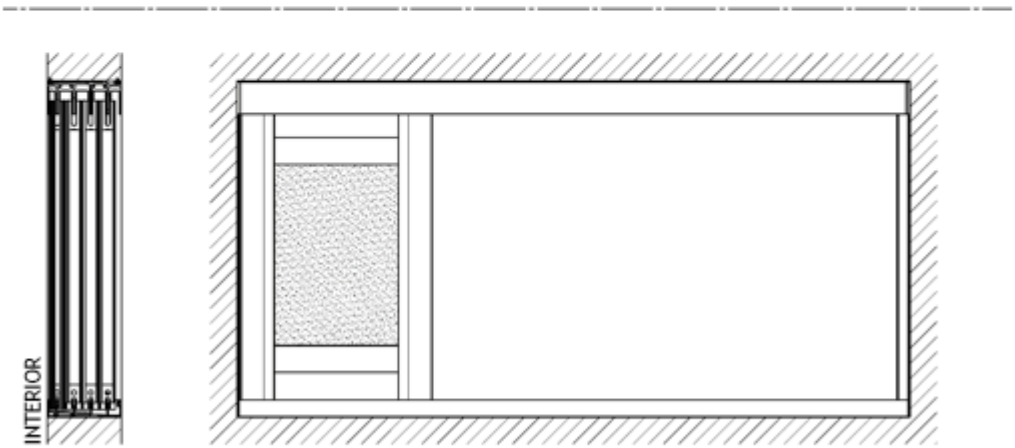

Panel layout: folding to the right

Opening size	Width S (mm)		Height H (mm)	
	min.	max.	max.	max.
2 panels (2-P)	1000	2500	550	2700
3 panels (3-P)	1500	3750	550	2700
4 panels (4-P)	2000	5000	550	2700

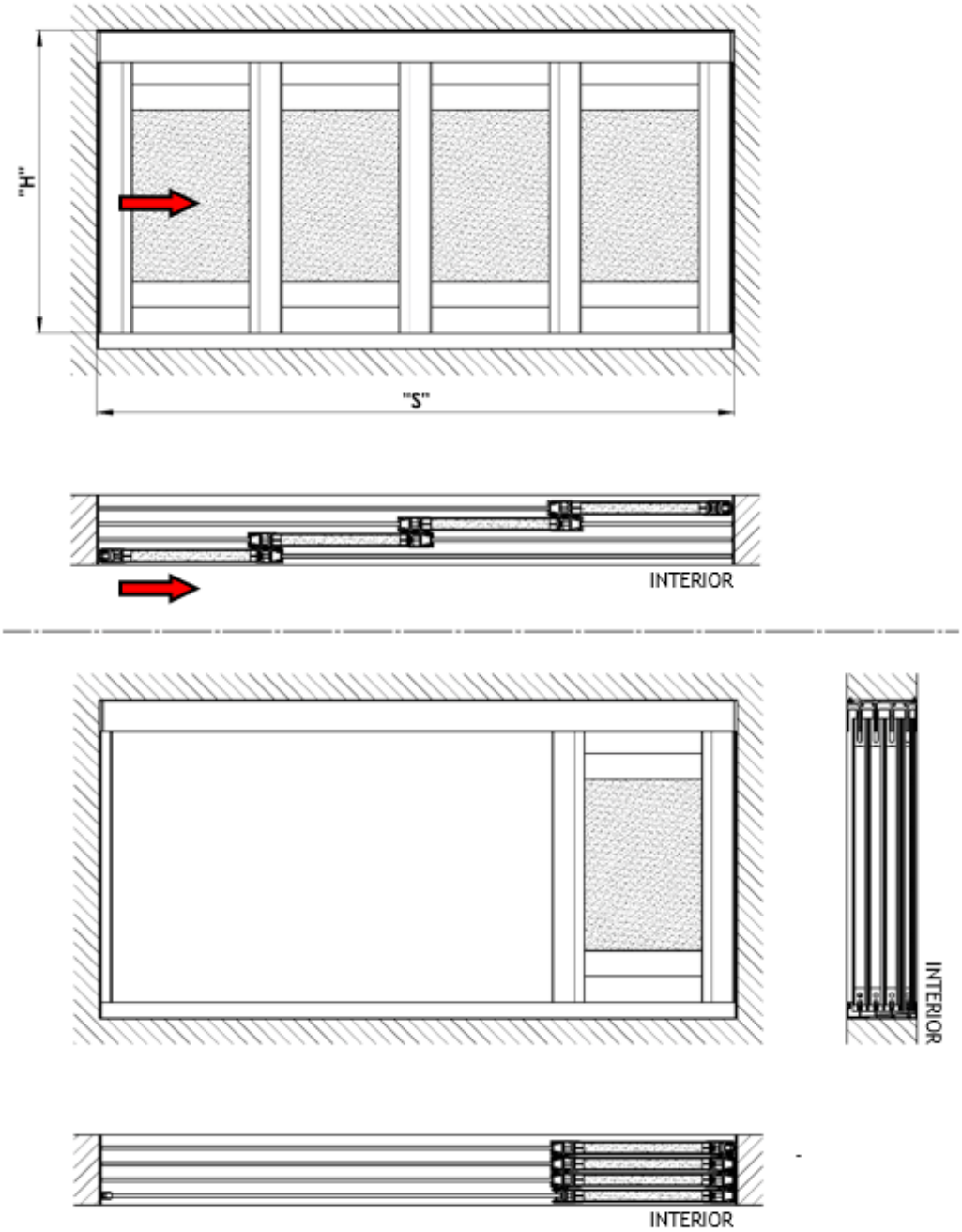

Panel layout: folding to the left and right (curtain)

Opening size	Width S (mm)		Height H (mm)	
	min.	max.	max.	max.
4 panels (2+2-LP)	2000	5000	550	2700
6 panels (3+3-LP)	3000	7000	550	2700
8 panels (4+4-LP)	4000	7000	550	2700

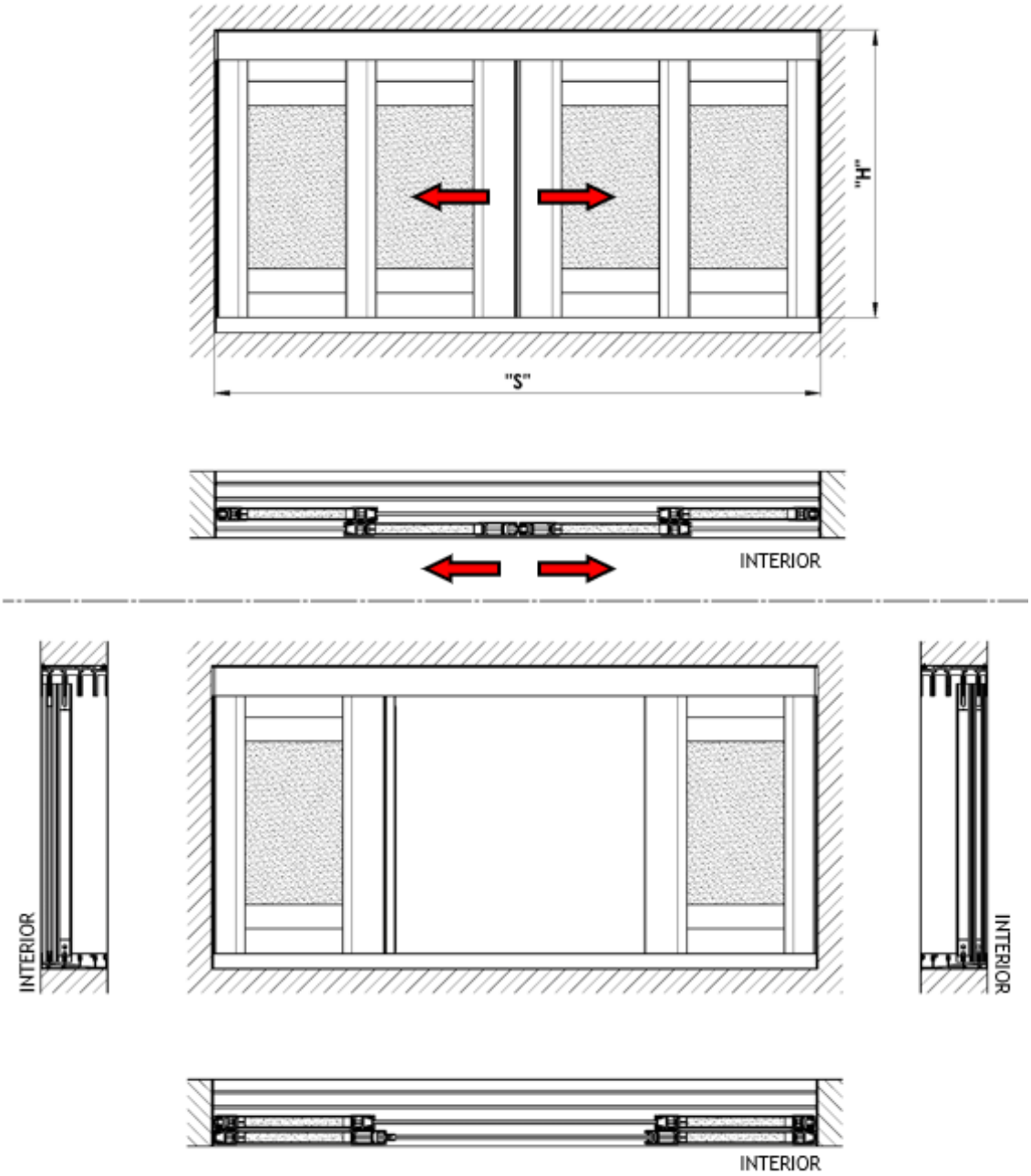

Upper rail

The upper rail serves for the upper guiding of the panels.

The upper rail is an aluminium extruded profile, with aluminium side elements at the ends of the profile and rubber seals along the length of the profile.

The upper profile must be securely attached in the supporting structure with sufficient load-bearing capacity. Anchoring holes are provided in the rail, having the diameter of 5 mm and spacing of 400 mm, see sketch below.

The screw head must not be higher than 5 mm and its diameter must not exceed 12 mm.

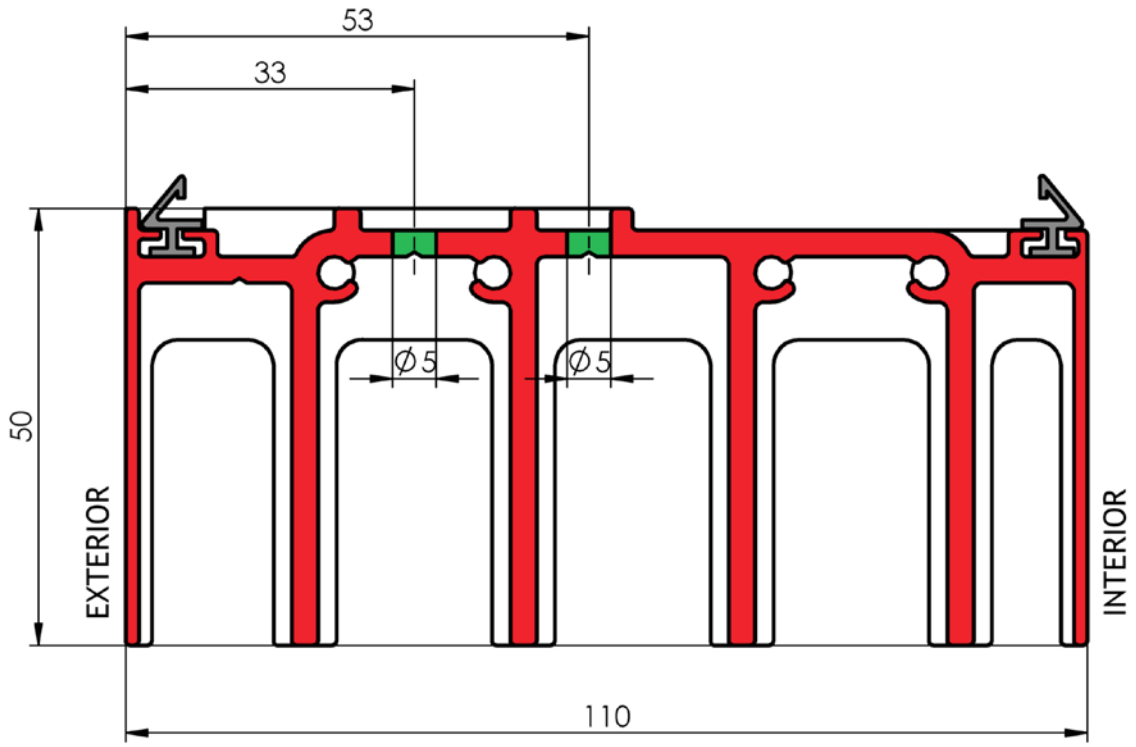

Lower rail

The lower rail guides the panels and transfers their entire weight to the load-bearing substrate. It also drains rain water running down the panels.

The lower rail must be securely attached in the supporting structure with sufficient load-bearing capacity. Anchoring holes may be pre-drilled in the rail, having the diameter of 6 mm and spacing of 400 mm, see sketch below.

The screw head must not be higher than 5 mm and its diameter must not exceed 12 mm.

Lower rail 4-K

The lower rail is a varnished aluminium extruded profile with 4 ribs to guide 4 rows of panels. Anodised aluminium inserts are placed at the ends of the ribs, and varnished aluminium side boards are placed at the ends of the profile.

This version of the lower rail may be used for all variants of panel layout.

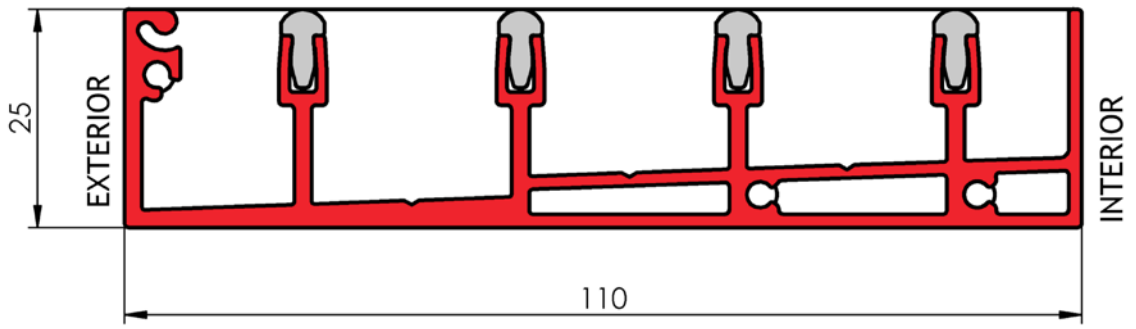

Lower rail 4-K+K

The lower rail is a varnished aluminium extruded profile with 3 ribs to guide 3 rows of panels. Anodised aluminium inserts are placed at the ends of the ribs, and varnished aluminium side boards are placed at the ends of the profile. The last rib is covered by a varnished aluminium cover.

This version of the lower rail may be used for the variants of panel layout where only 3 rows of panels are located one behind another, i.e.: 2L, 3L, 2P, 3P, 2+2-LP, 3+3-LP.

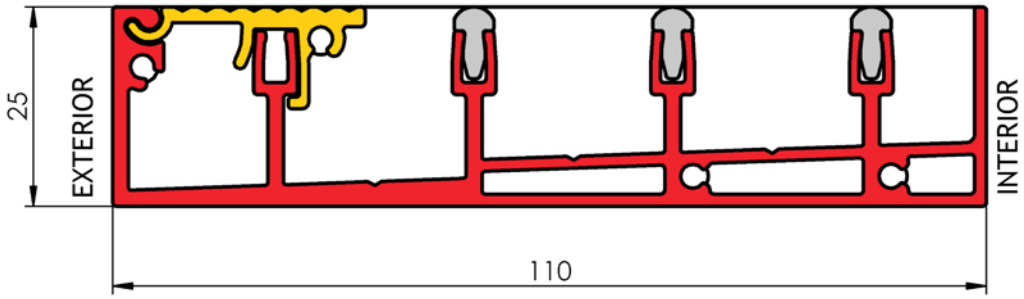

Lower rail – anchoring

The lower rail must be securely attached in the supporting structure with sufficient load-bearing capacity. Anchoring holes may be pre-drilled in the rail, having the diameter of 6 mm and spacing of 400 mm, see sketch below.

The screw head must not be higher than 5 mm and its diameter must not exceed 12 mm.

The substrate for the installation of the glazing system should be flat, sufficiently load-bearing, compact and crack-free.

The lower rail must be installed horizontally and must not wave. Pay attention to the weathering of terraces and their unevenness. The lower rail may be padded by packing pieces. In such a case, extra care must be taken when taking measurements to prevent lowering the height of the opening after the installation.

The weight of one panel may be up to 50 kg. Pay increased attention to situations when all the panels are moved to one side. This weight must be taken into account when selecting the anchoring method and assessing the bearing capacity of the substrate.

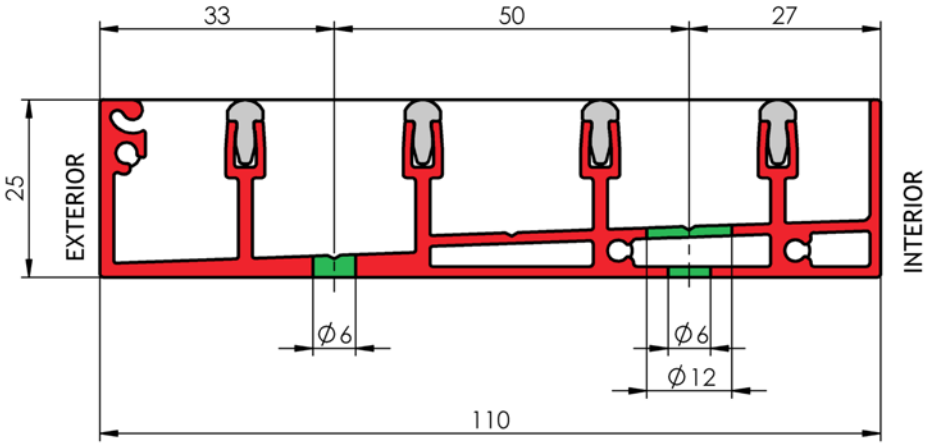

Lower rail – Water draining

All rain water from the panels runs down to the lower rail. This water must be drained to prevent leaking to the interior.

A version with side draining is suitable for installation to a final surface. There are cuts between the ribs and draining holes in the front board of the rail, hidden under a cover.

It is also possible to supply a lower rail without these openings for flush mounting, but it is necessary to construct the rail draining on site.

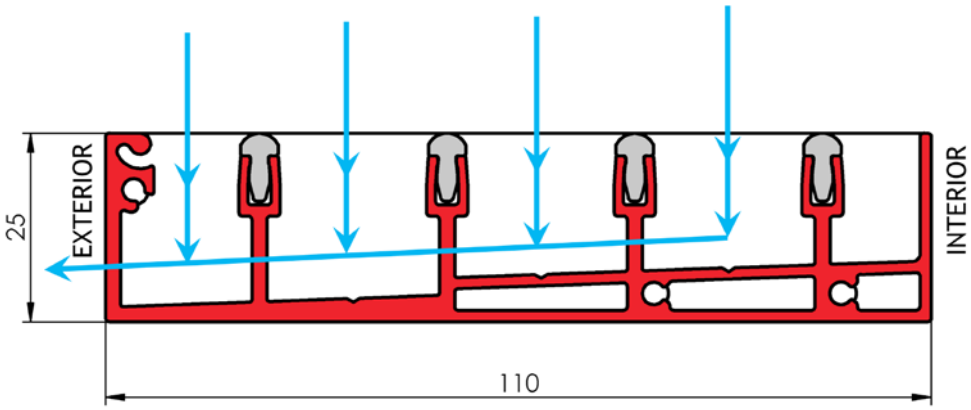

Panel

The panel consists of a frame and filling. The individual panels travel over the lower rail and are guided by the upper rail.

1 – Upper horizontal frame
2 – Left vertical frame
3 – Right vertical frame
4 – Filling
5 – Lower horizontal frame

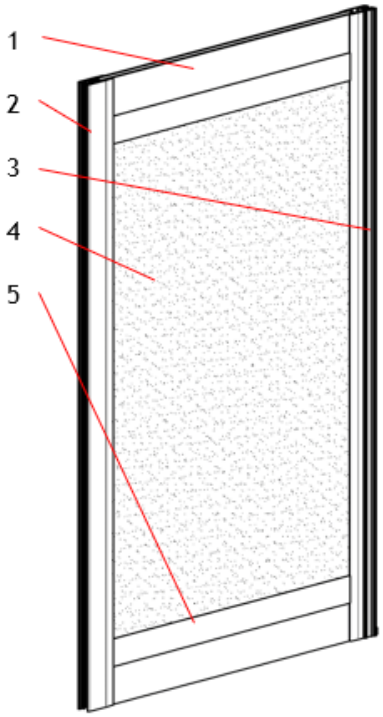

Panel – upper horizontal frame

Serves for guiding the panel in the upper rail. A brush is installed over the whole length of the upper frame. Plastic inserts on the sides ensure better guiding.

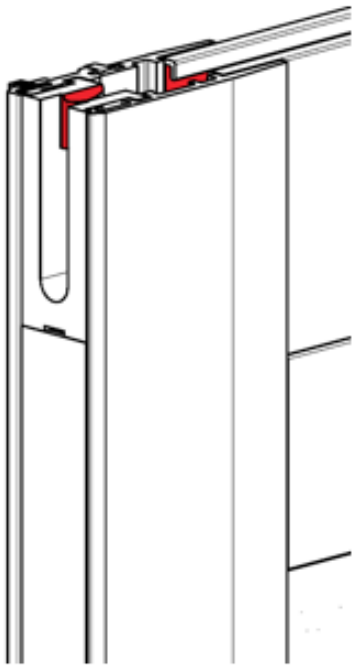

Panel – lower horizontal frame

Serves for guiding the panel in the lower rail. A brush is installed over the whole length of the lower frame. Carriages with wheels on which the panel travels are placed at the sides. It is possible to adjust the height of the carriages to compensate for minor unevenness in the installation of the lower rail. Adjustment is to be made by the Allen screw accessible from the side, through the opening in the lower cover.

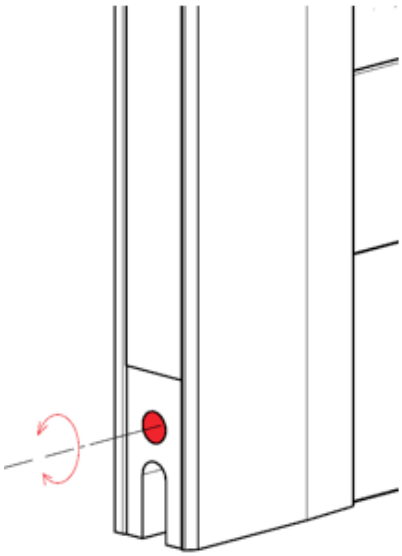

Panel – vertical frame – connection of two panels

The individual panels have stop pieces between them. They "pick up" each other when closing, and it is therefore sufficient to close the system with one panel only.

There is no stop piece between the panels when opening, i.e., each panel must be moved by hand separately.

Brushes are installed in the connection between the panels over the whole length of the frame.

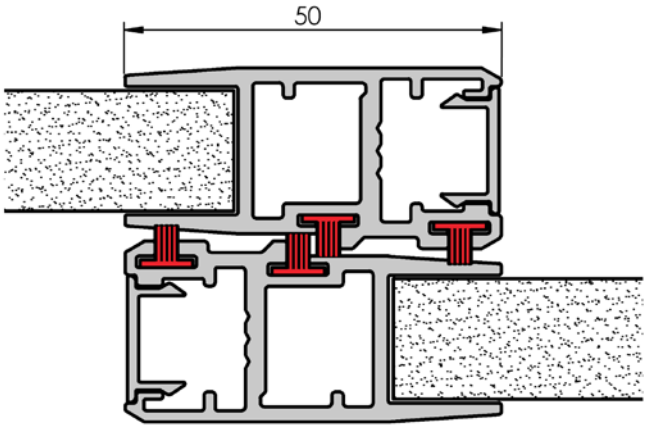

Panel – vertical frame – end stop

End panels have the outside vertical profile (1) open at the side. Brushes (2) are installed over the whole length of the profile. An end rail (3) is then installed to the supporting structure. The end rail fits into the frame upon closing. Both the end rail and the end profile have rubber inserts (4) for "soft" closing.

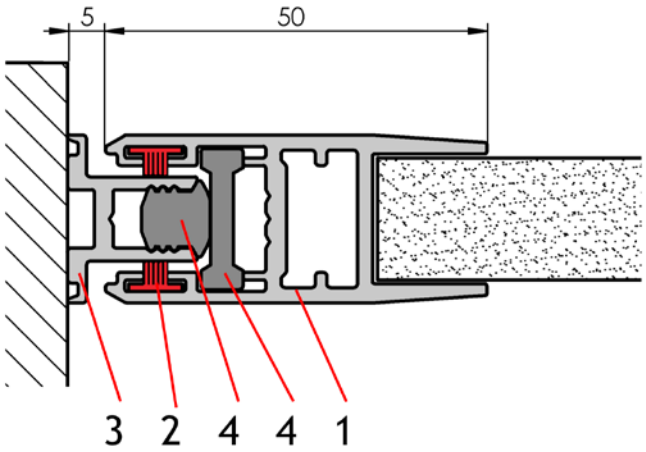

Panel – vertical frame – curtain connection

In case of the curtain variant, the central panels have thicker outside vertical profiles. The vertical profile of the left panel (1) has an end rail (3). The right panel (2) is open at the side and brushes (4) are installed over the whole length of the profile. Both the end rail and the open profile have rubber inserts (5) for "soft" closing.

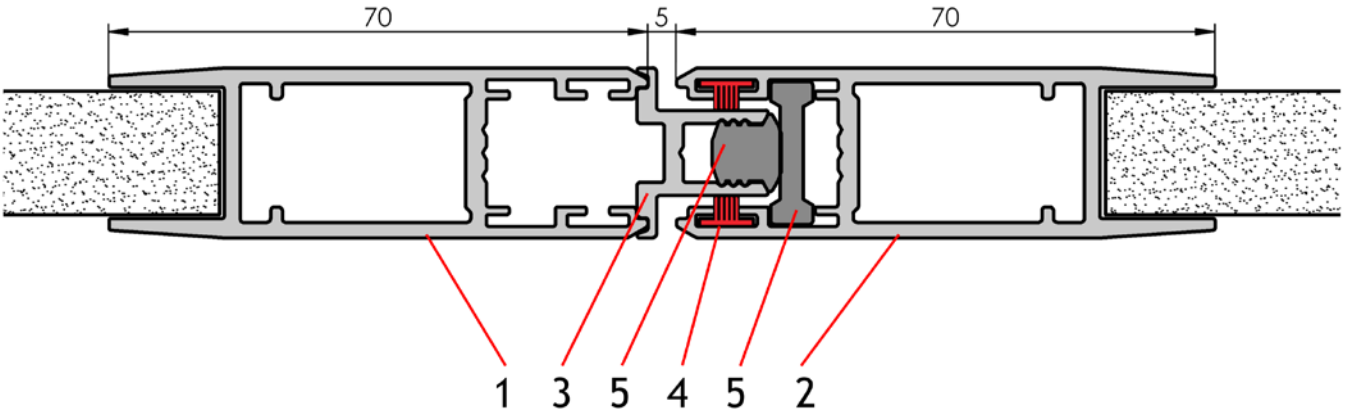

Handle and lock, locking mechanism

To increase user comfort, safety and the possibility of securing sliding panels, the system can be supplemented with a handle and a locking mechanism. The proposed solution allows easy control of the panel when opening and closing it and at the same time ensures stable locking of the panel in the closed position.

The handle is structurally adapted to the profile of the sliding panel so as not to disturb its appearance or smooth movement in the rail system. The FAB lock is integrated into the handle set and allows mechanical securing of the panel against unwanted displacement or intrusion. The individual components are designed with regard to simple assembly, reliable function, long-term durability and easy operation.

The handle can only be placed on the panel closest to the interior. This panel is primarily intended as a walk-through.

The lock can only be placed in the panel together with the handle. The lock is controlled using a cylinder insert (FAB).

The locking mechanism can only be placed in the panel closest to the exterior. This panel is not primarily intended as a walk-through. Locking serves to secure the panel against unwanted movement.

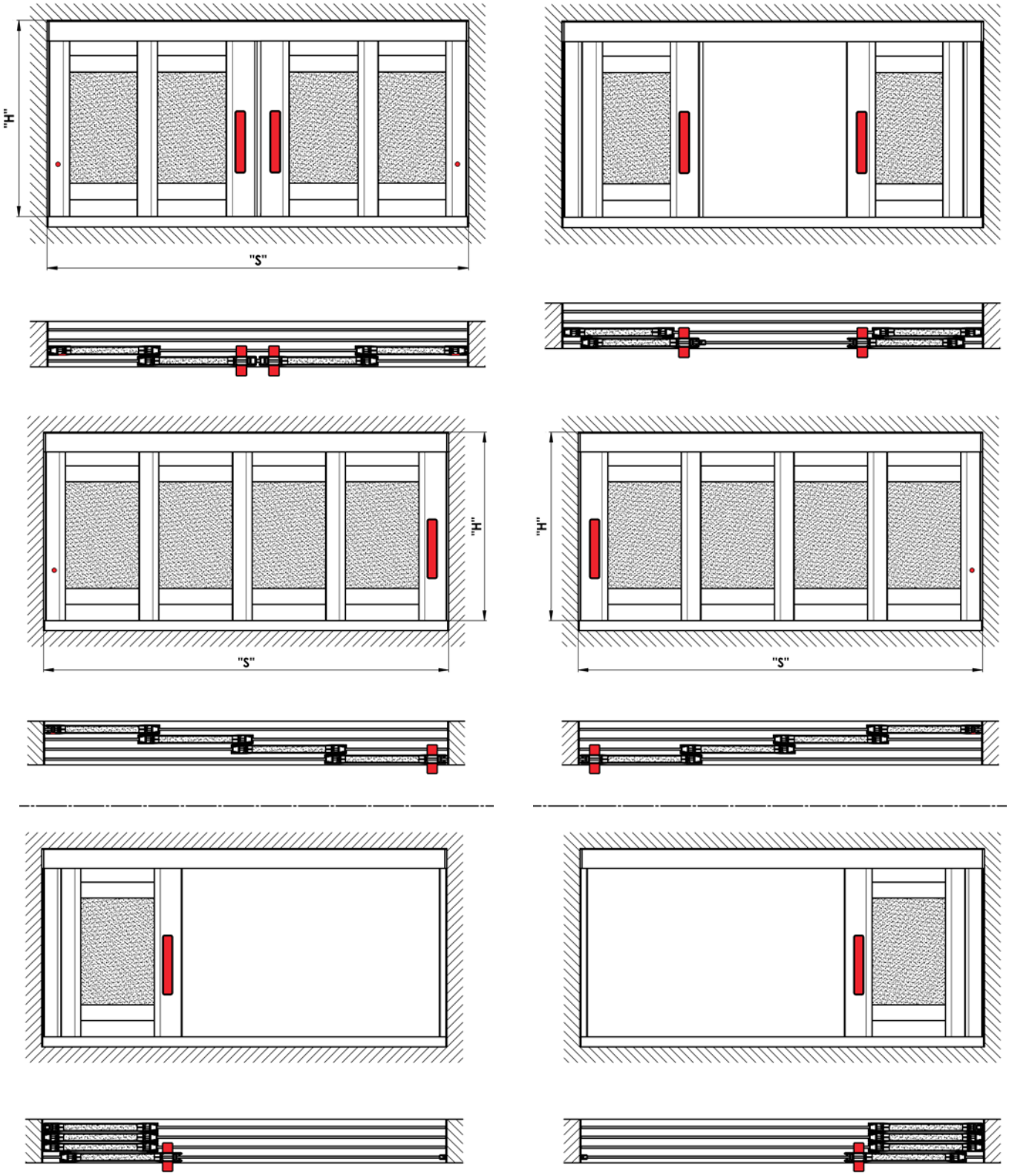

Handle and lock

- The handle can be placed from the interior, exterior, and both sides.
- The handle can be fitted with a lock that is controlled using a lock cylinder from the interior and exterior, or a key and a knob.
- The location of the handle on the panel can be selected.
- Standard handle location X = 1000mm, see picture

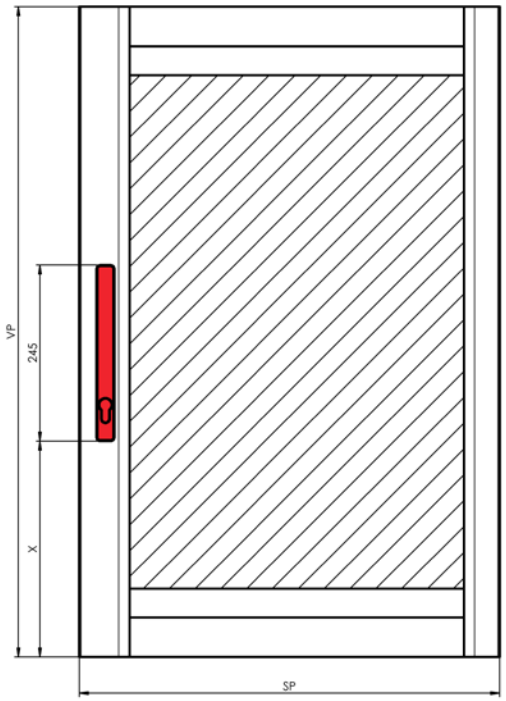

Handle with no lock

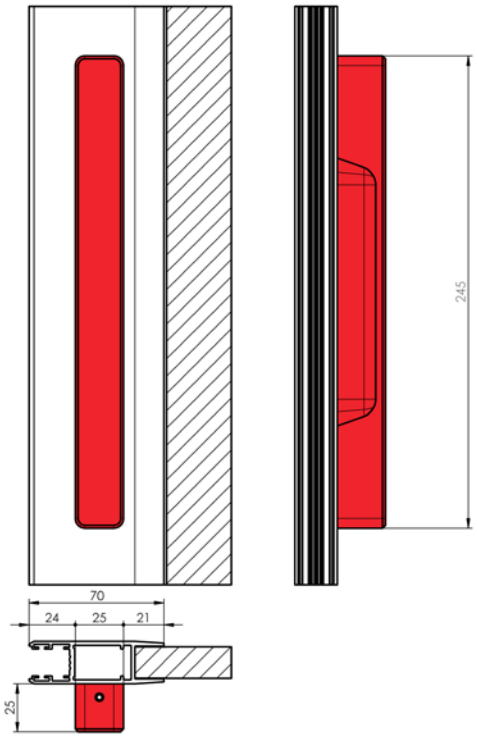

Handle with lock, key control

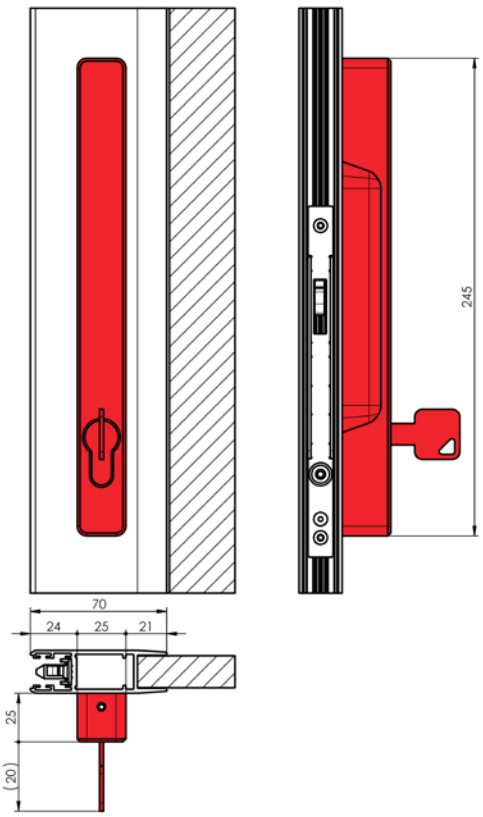

Handle with lock, knob control

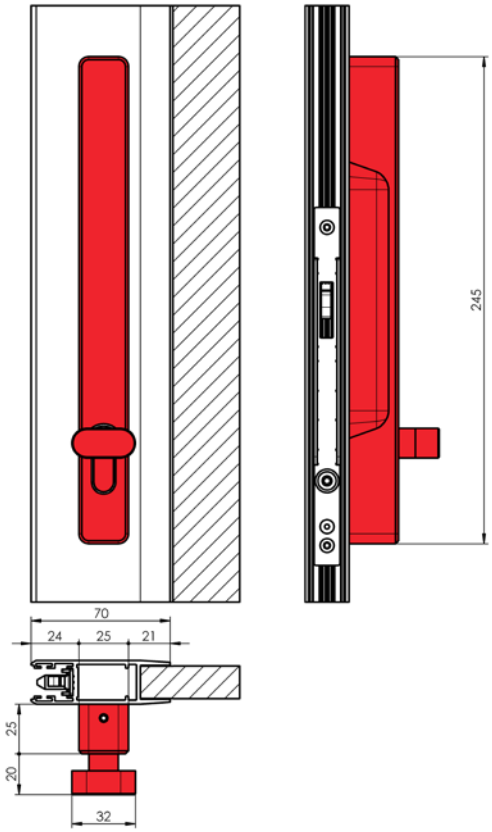

Versions

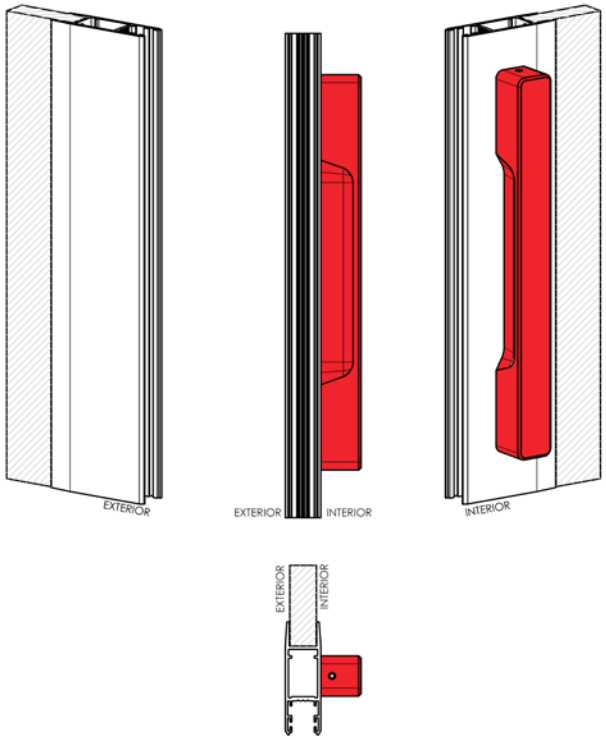
EXTERIOR
EXTERIOR
INTERIOR
INTERIOR
EXTERIOR
INTERIOR

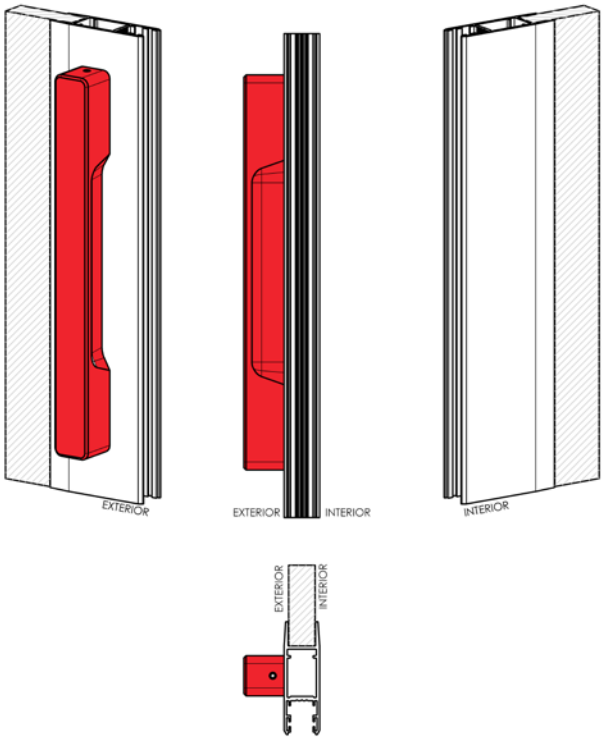
EXTERIOR
EXTERIOR
INTERIOR
INTERIOR
EXTERIOR
INTERIOR

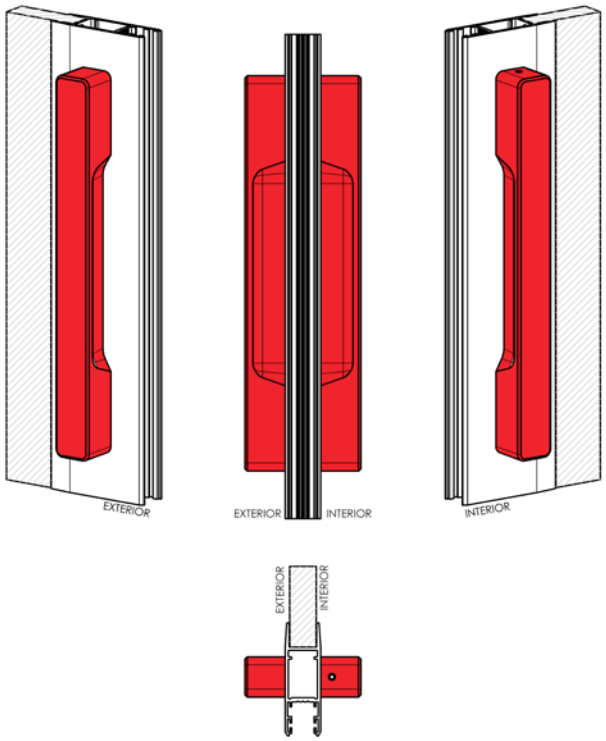
EXTERIOR
EXTERIOR
INTERIOR
INTERIOR
EXTERIOR
INTERIOR

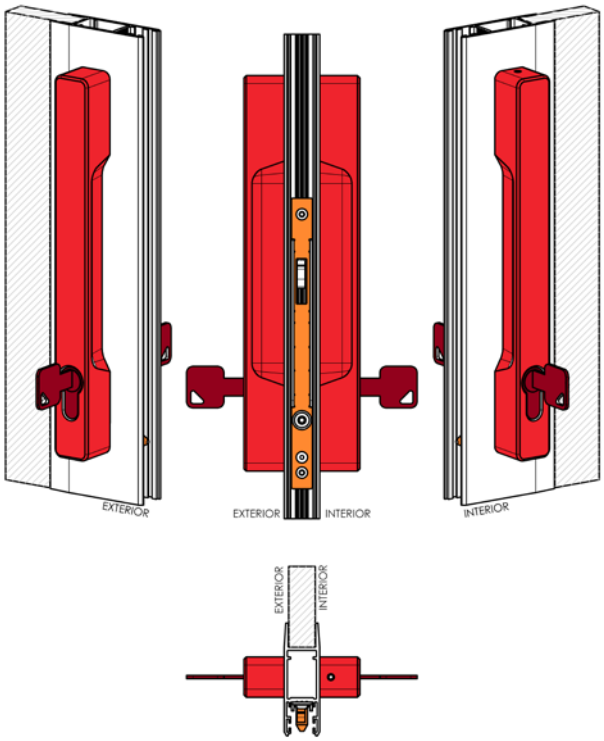
EXTERIOR
EXTERIOR
INTERIOR
INTERIOR
EXTERIOR
INTERIOR

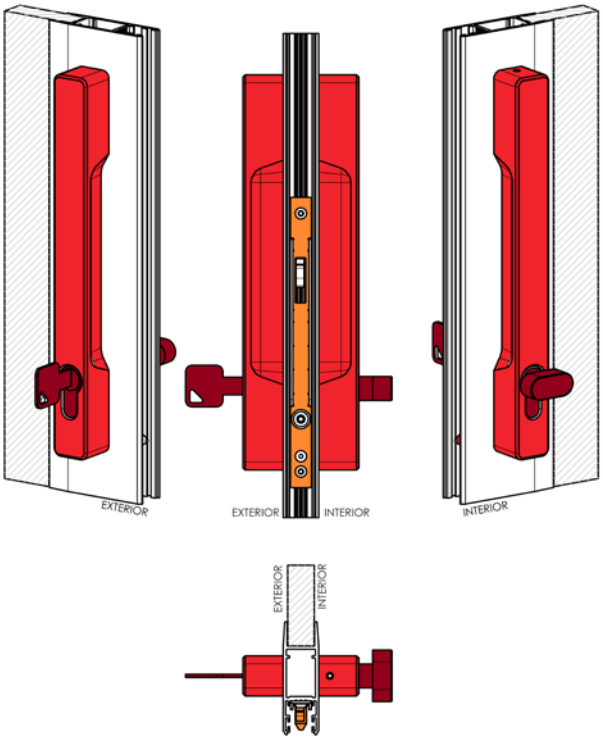
EXTERIOR
EXTERIOR
INTERIOR
INTERIOR
EXTERIOR
INTERIOR

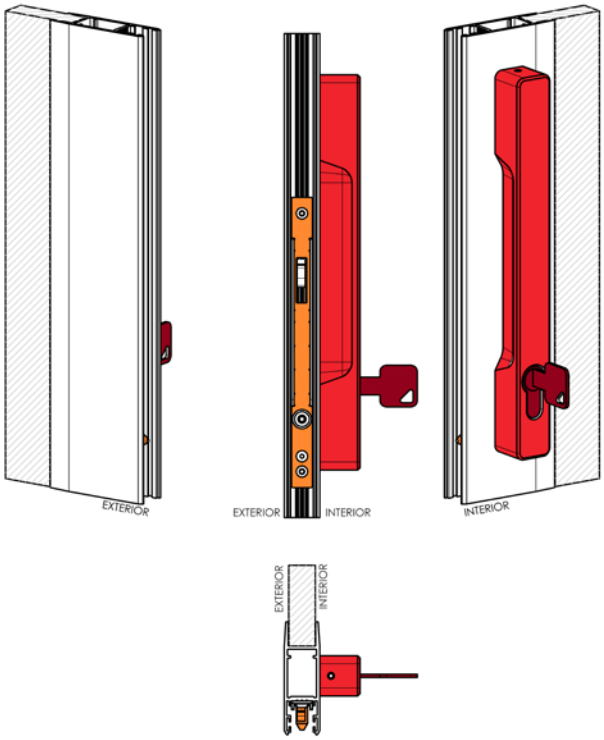
EXTERIOR
EXTERIOR
INTERIOR
INTERIOR
EXTERIOR
INTERIOR

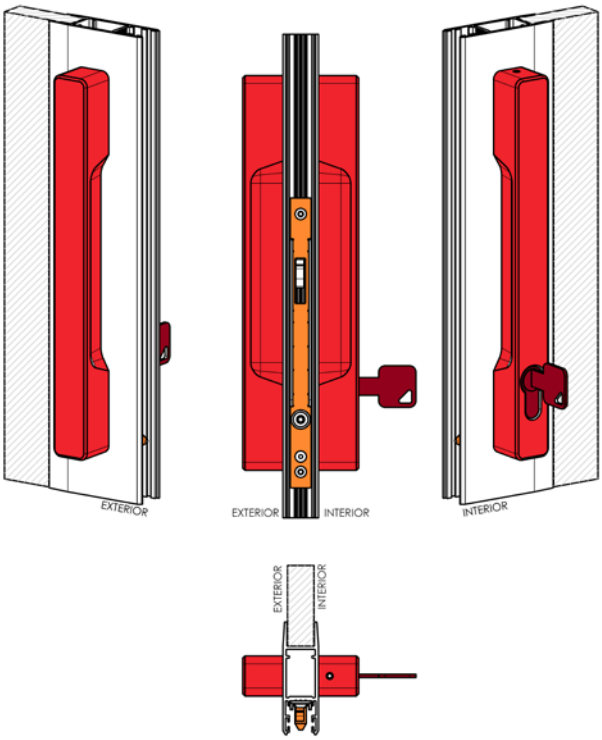
EXTERIOR
EXTERIOR
INTERIOR
INTERIOR
EXTERIOR
INTERIOR

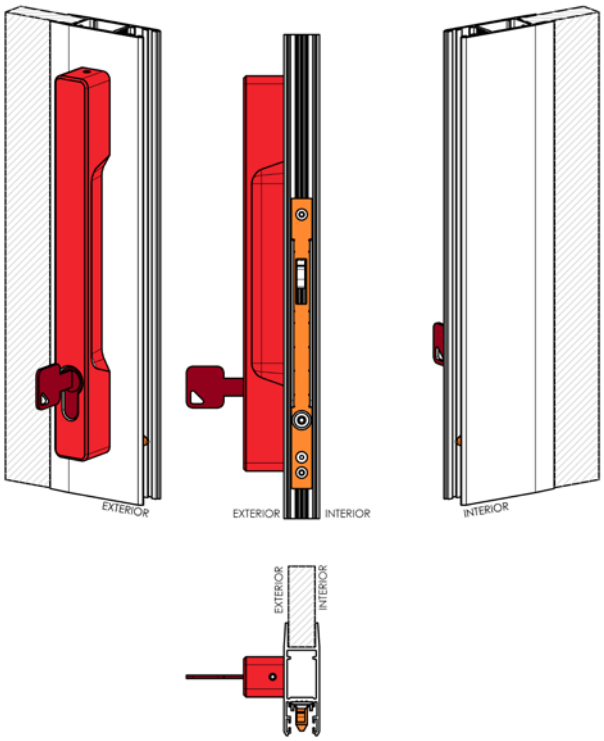
EXTERIOR
EXTERIOR
INTERIOR
INTERIOR
EXTERIOR
INTERIOR

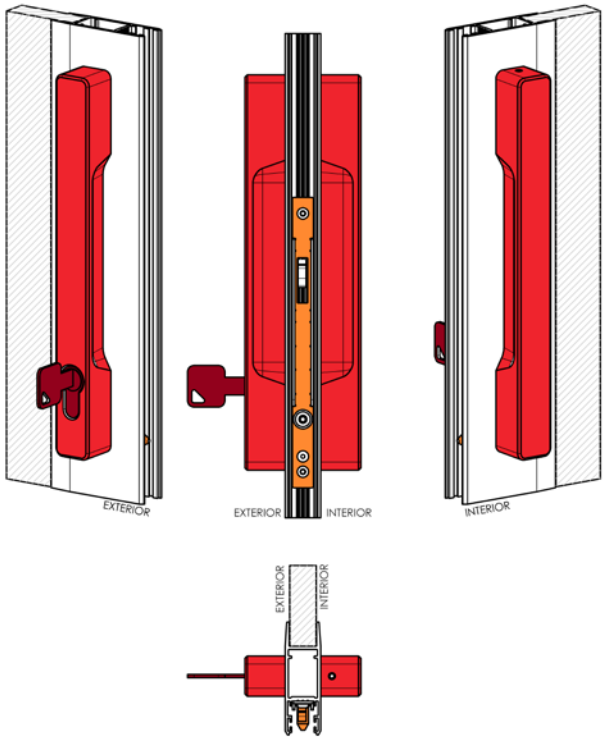
EXTERIOR
EXTERIOR
INTERIOR
INTERIOR
EXTERIOR
INTERIOR

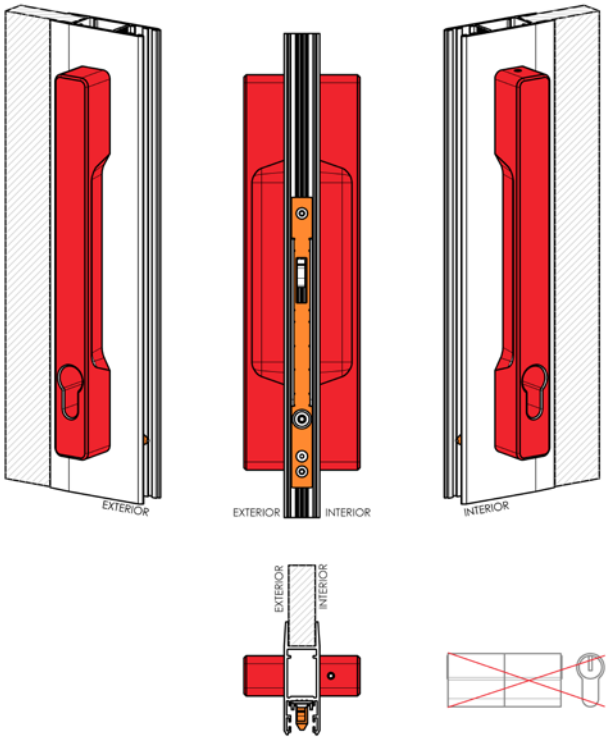
EXTERIOR
EXTERIOR
INTERIOR
INTERIOR
EXTERIOR
INTERIOR

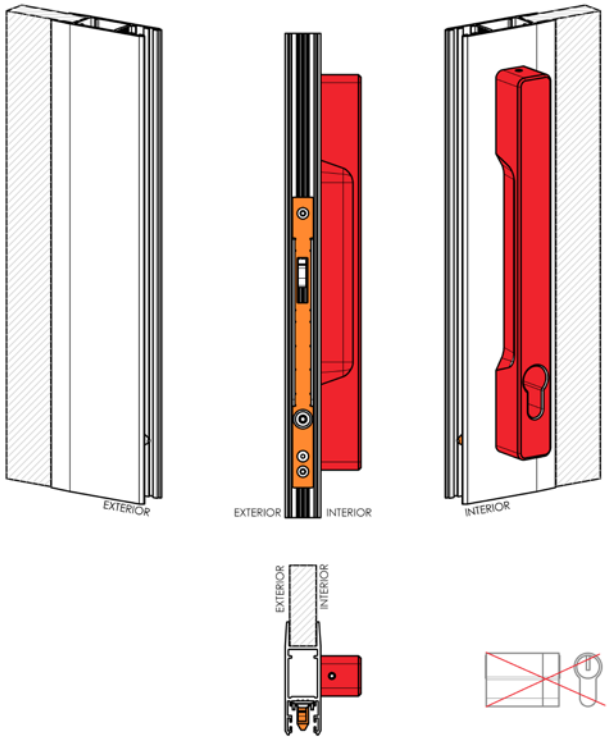
EXTERIOR
EXTERIOR
INTERIOR
INTERIOR
EXTERIOR
INTERIOR

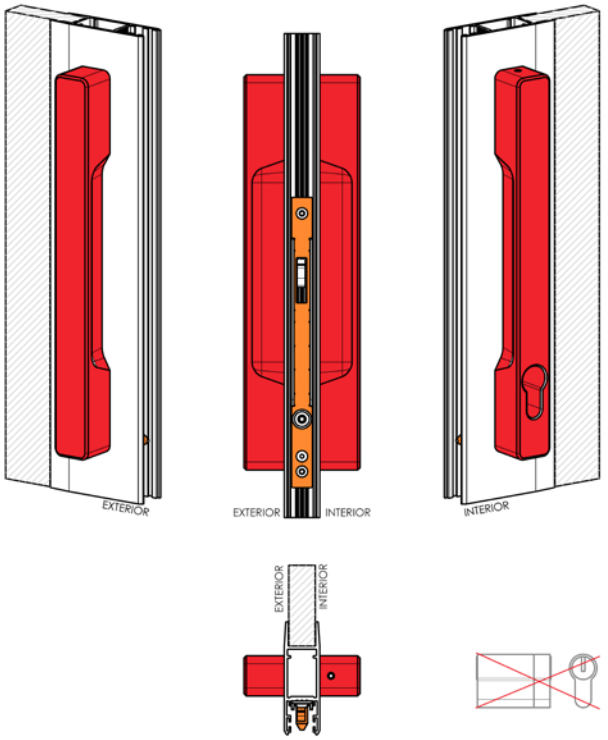
EXTERIOR
EXTERIOR
INTERIOR
INTERIOR
EXTERIOR
INTERIOR

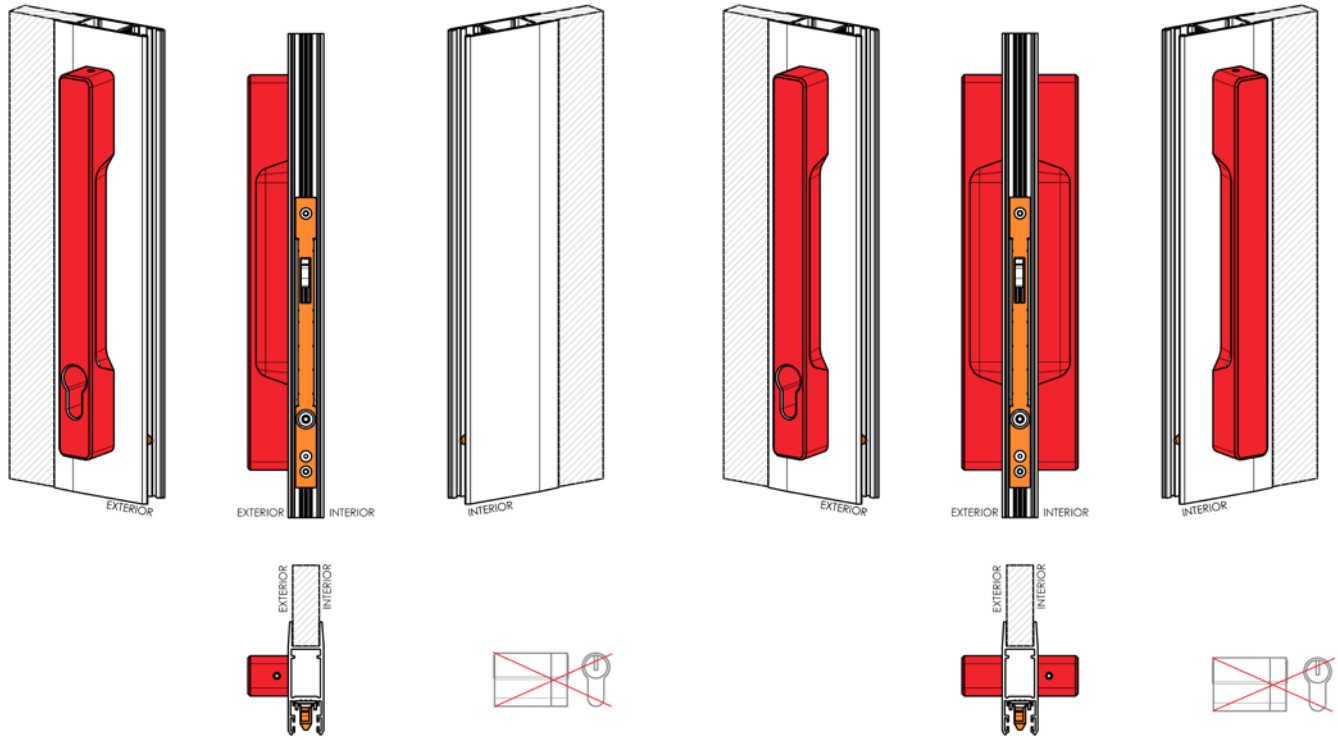

Panel locking

- Control of the locking is only accessible from the interior.
- Unlocked state – horizontal groove position
- Locked state – vertical groove position

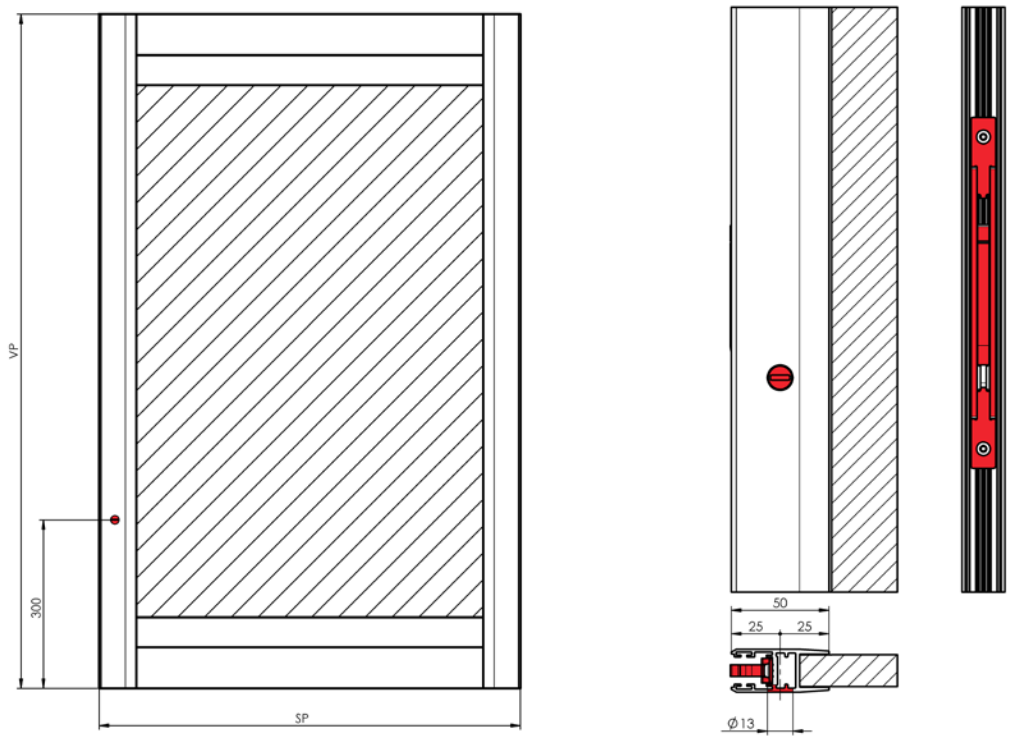

Design Options

Panel – filling – FIX - fixed slats

The FIX filling consists of rectangular aluminium slats. There are gaps between the slats ensuring ventilation. Shading function of the panels is limited.

The slats are fixed and cannot be adjusted.

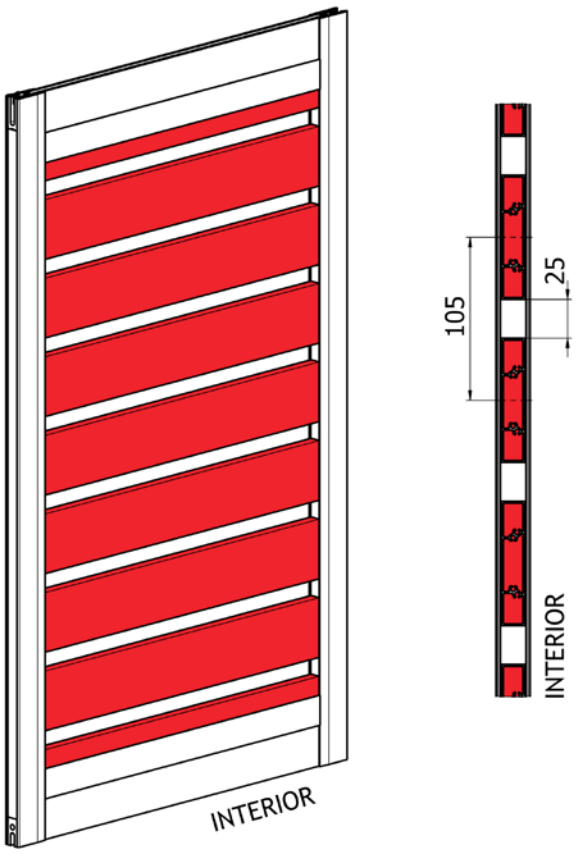

Panel – filling – FIX FABRIC - fixed slat with fabric

The FIX FABRIC filling consists of rectangular aluminium slats. There are gaps between the slats ensuring ventilation. Behind the slats, screen fabric is installed to increase the shading function of the panels.

The slats are fixed and cannot be adjusted. The screen fabric is fixed and cannot be removed.

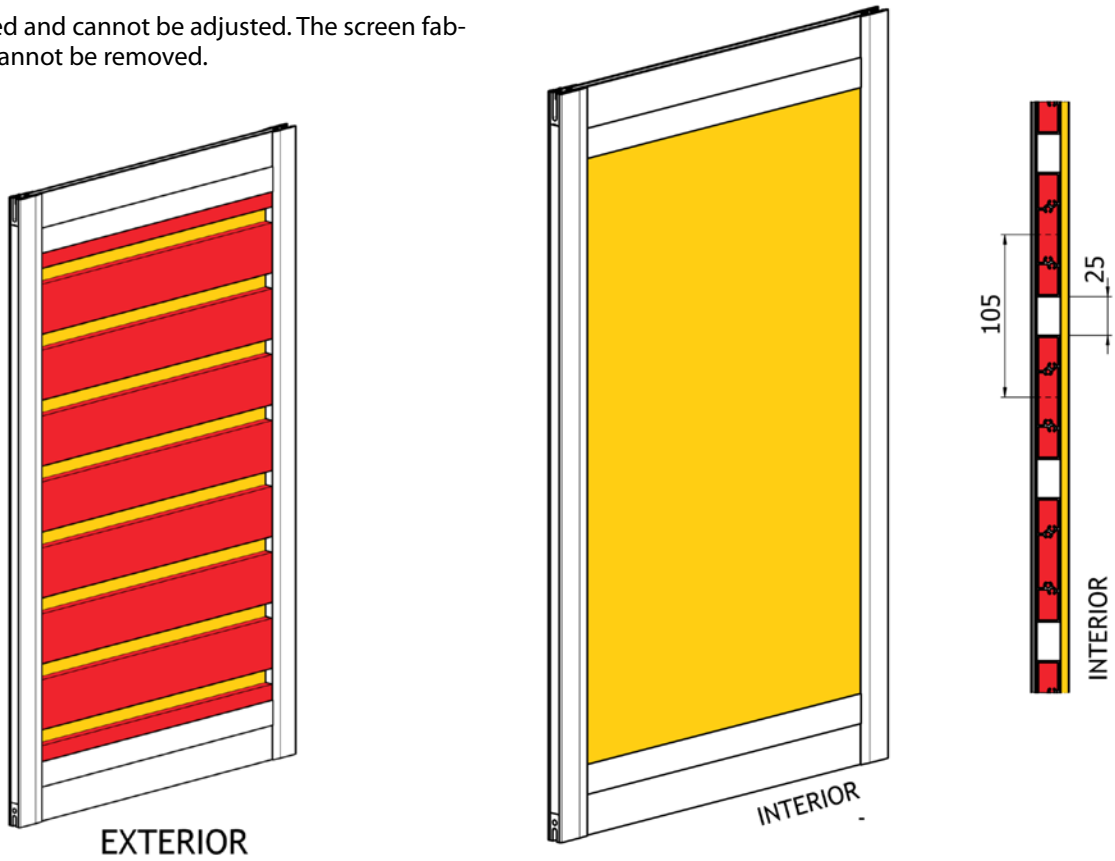

Panel – filling – FABRIC - fabric

The FABRIC filling is a tight and stretched screen fabric. An aluminium cross piece having the same colour as the frame further stabilises the frame.

The screen fabric is fixed and cannot be removed.

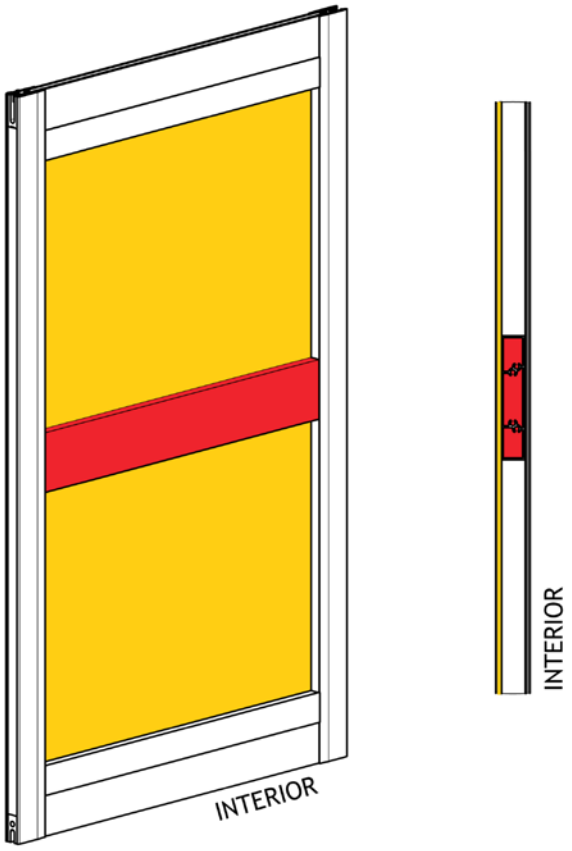

Panel – filling – SLOPE- sloping slat

The SLOPE filling consists of sloping aluminium slats. The slats overlap, ensuring there are gaps between them for ventilation, while protecting against sunshine. The slats are fixed and cannot be adjusted.

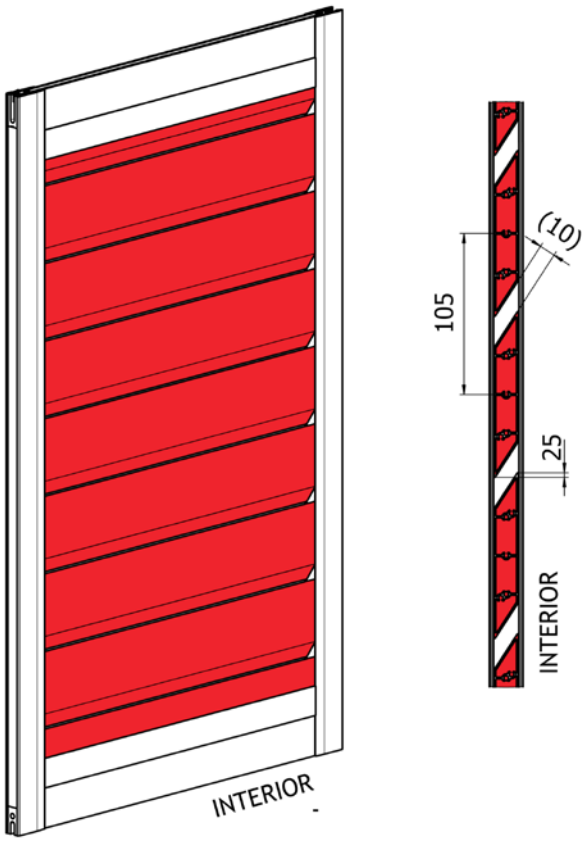

Panel – filling – SLOPE ROTATING - sloping adjustable slat

The SLOPE ROTATING filling consists of sloping aluminium slats. The slats overlap, ensuring there are gaps between them for ventilation, while protecting against sunshine.

The first, last and central slats are fixed and cannot be adjusted. Slats in the upper and lower sections can be adjusted. The slats are connected by tie rods. They can be adjusted manually by rotating one of the slats.

CAUTION: The panel can only be moved if the slats have been shut, otherwise the slats will collide with the adjacent panel.

CAUTION: When moving a panel, it is necessary to check if slats at the adjacent panel have been shut, otherwise the slats will collide with the panel.

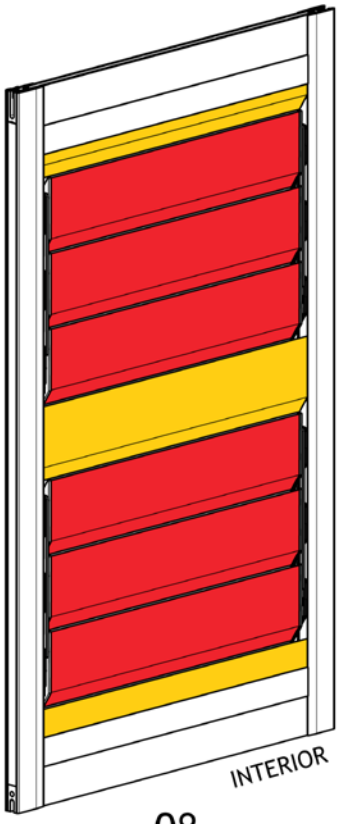

0°

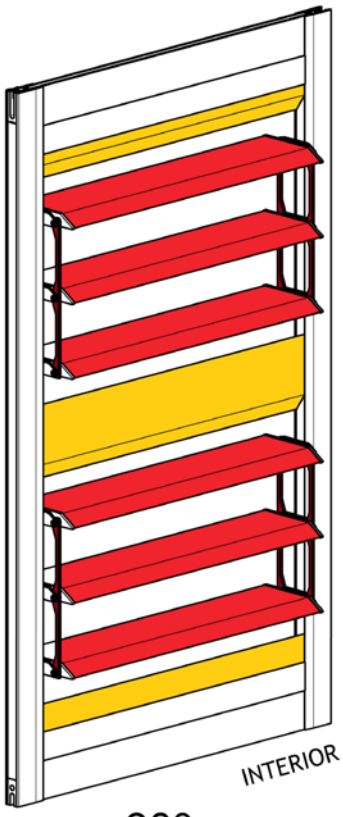

90°

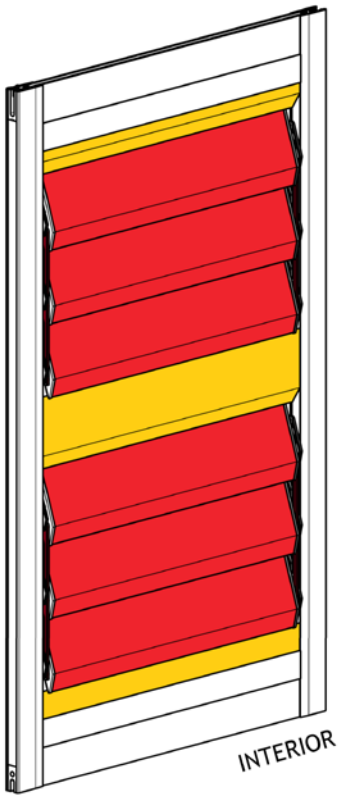

160°

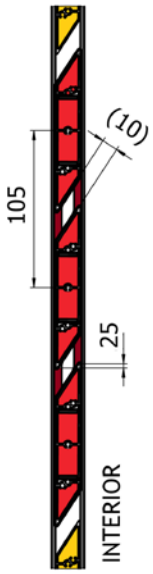

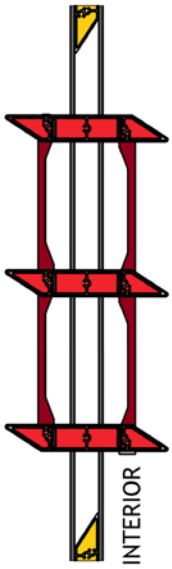

Panel – Filling – GLASS

GLASS filling is a panel filling using glass

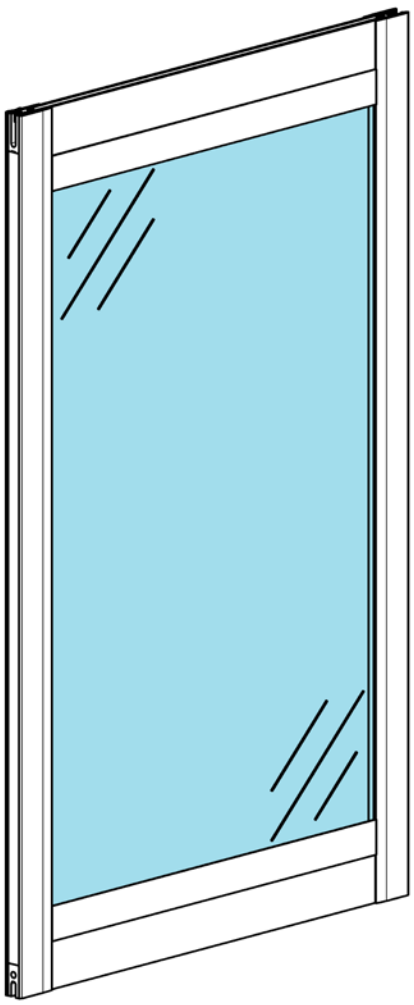

Single glass, 6mm, clear

- Tempered glass ESG, Thickness 6mm, Clear

Insulating double glass 16mm (4-8-4)

- Outer glass – Tempered glass ESG, Thickness 4mm, Clear
- Gap between the glasses 8mm
- Inner glass – Tempered glass ESG, Thickness 4mm, Clear
- Heat transmission through the glass U = 2,9 W/m^{2}K

ALFA and ALFA PLUS screen in a common box 110 mm with ARTOSI SLIDE PANELS wall

- The sliding panel wall can be installed under a screen roller shutter box. This solution makes it possible to use panels to fill the space of the ARTOSI pergola, or any other suitable building opening.

3-track profile for sliding panels

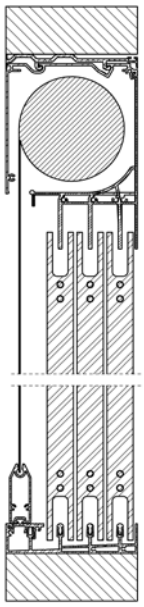

Sliding panels – Track with flap – For sale
2-01888-0001

The box must always be firmly anchored to the adjacent support structure, e.g. to a stay of the ARTOSI pergola or another suitable building structure.

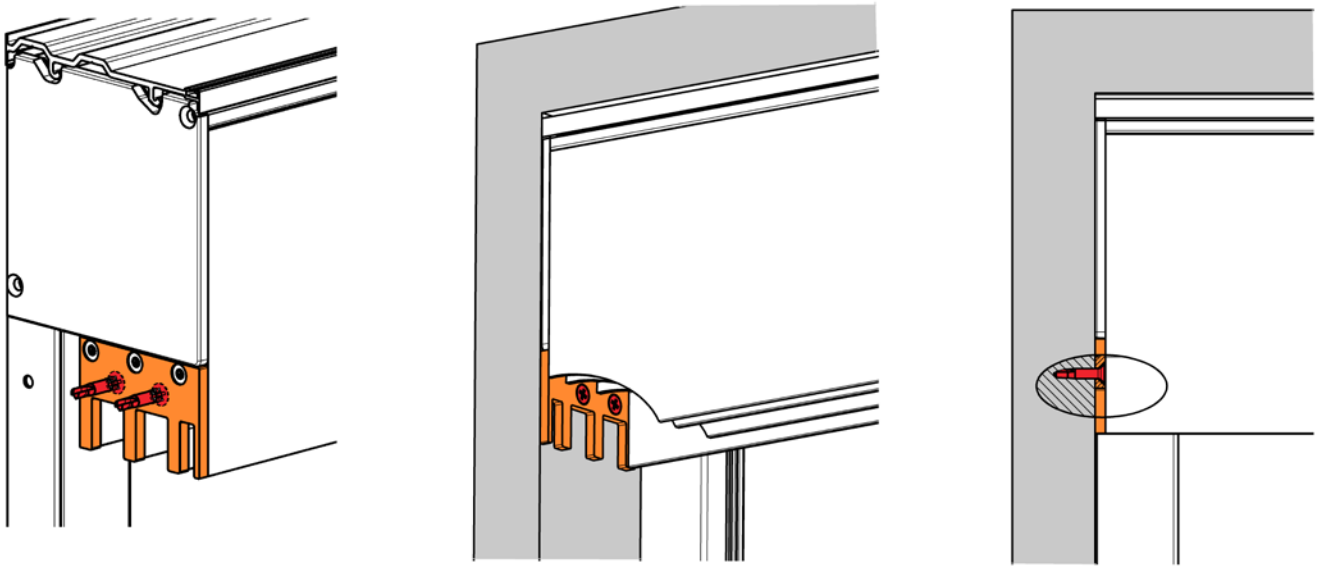

Upper rail

If the upper rail of the sliding panel wall is a part of a common configuration with the ALFA or ALFA PLUS exterior roller shutter, its dimensions are already taken into account in the configuration. That's why it is not necessary to make any additional dimensional calculations.

Additional installation of the sliding panel wall under existing the ALFA / ALFA PLUS screen roller shutter

In case of retrofitting the sliding panel wall under the existing ALFA / ALFA PLUS screen roller shutter, the following conditions must be met:

- The screen roller shutter must be mounted using a **pergola bracket**. Additional installation of the sliding panel wall under a **self-supporting screen roller shutter is not possible**.
- The **ALFA** screen roller shutter must be equipped with the **A840 type guide rail (folded).**
- For a combination with the sliding panel wall, it is necessary to use a **common ALFA screen roller shutter box with an integrated upper rail for guiding the sliding panels.** If the existing screen roller shutter is not equipped with this box, the front part of the box must be replaced. **The front part of the box with an integrated rail can be ordered separately as a part of the rail configuration for sliding panel walls.**

Measurement and Assembly Instructions

Measuring the mounting opening

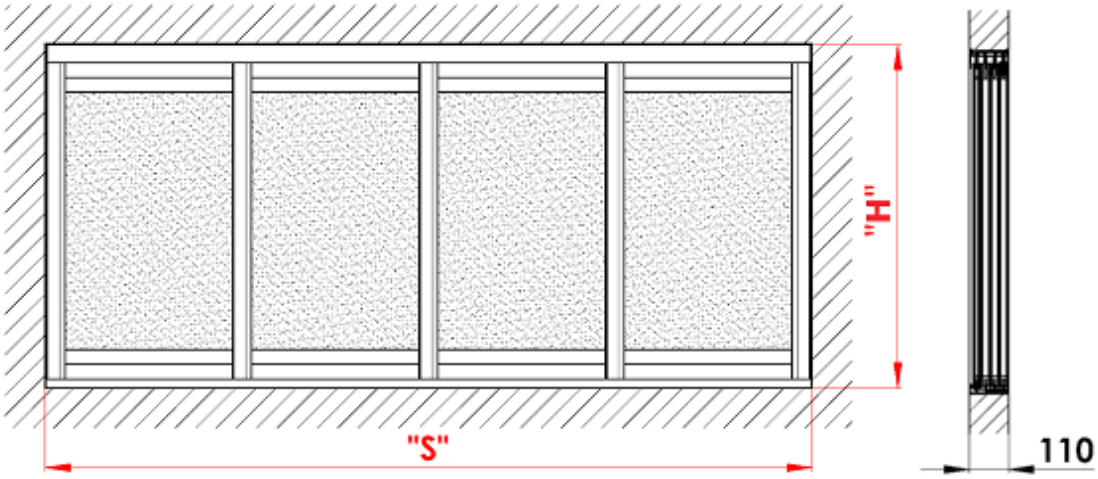

In case of the ARTOSI SLIDE PANELS systems, it is necessary to indicate the actual smallest measured width and height of the opening to which the systems are to be installed. The depth of the supporting structure frame should be at least 110 mm.

The substrate for the installation of the slide panel system should be flat, sufficiently load-bearing, compact and crack-free. If the system is to be installed to existing metallic or wooden structures, the structures must be free of any signs of damage to the supporting and anchoring elements and free of any horizontal and vertical deflection.

Standard dimensions

	Width S (mm)		Height H (mm)	
	min.	**max.**	**min.**	**max.**
Opening to be filled	1000	7000	550	2700
Individual panel	500	1250	550	2700

For detailed information about available dimensions, see Technical Specification

Taking measurements in a free opening for the sliding system

Measure both the width and height as the actual size of the openings, in several points. It is always necessary to take into account the rectangularity and flatness of the opening measured. The ordering dimensions are always the smallest values measured.

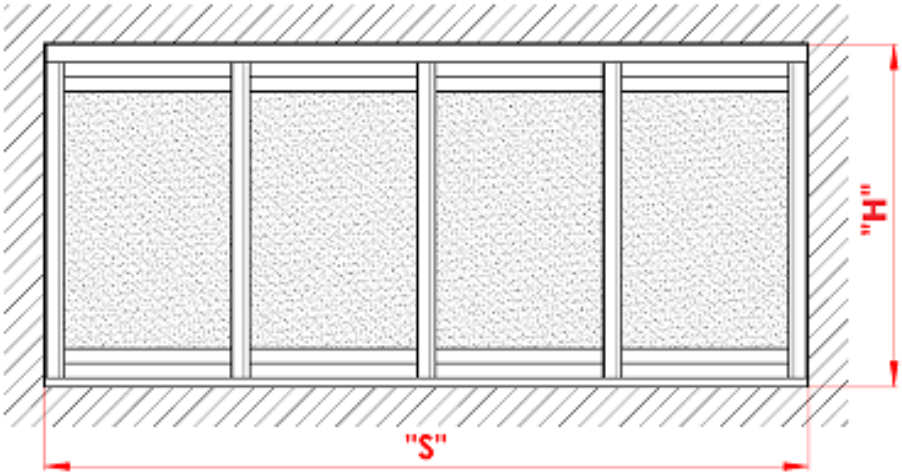

Features and characteristics of the ARTOSI SLIDE PANELS system to be considered when taking measurements and installing the system:

The substrate for the installation of the glazing system should be flat, sufficiently load-bearing, compact and crack-free.

The weight of one panel may be up to 50 kg. Pay increased attention to situations when all the panels are moved to one side. This weight must be taken into account when selecting the anchoring method and assessing the bearing capacity of the substrate.

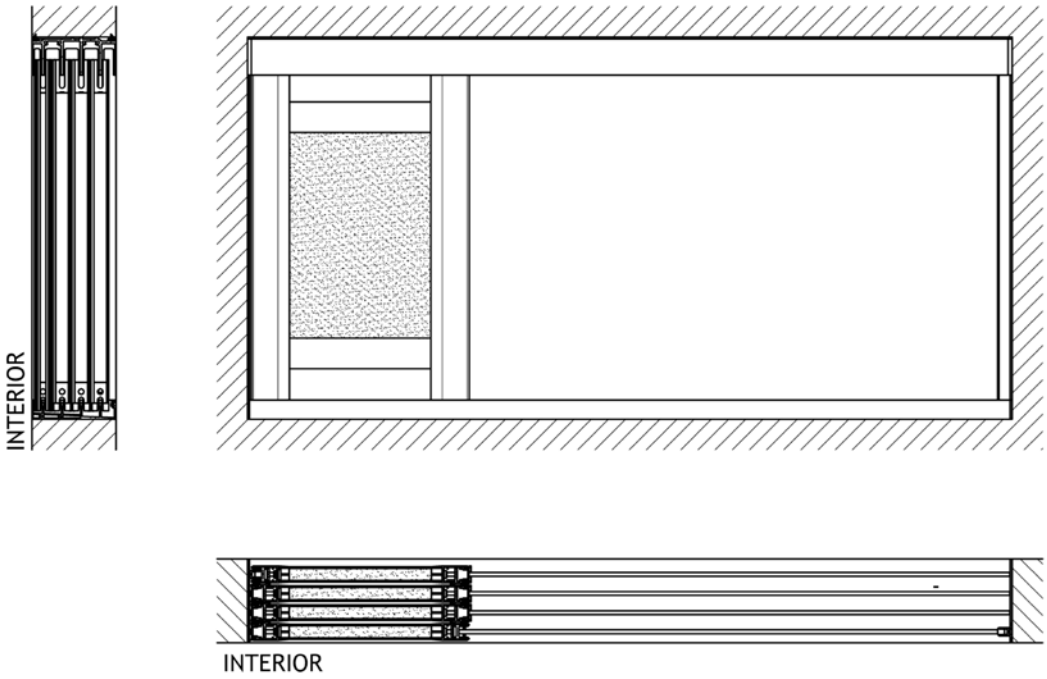

Pay attention to the supporting structure to which the upper rail of the system is attached. In case of deflection of the structure, the upper rail is likely to come into contact with the panels, causing the transfer of loading from the supporting structure to the panels. This loading will prevent the panels from moving, or even cause irreversible damage to the panels. This situation is likely to occur in case of installation into a pergola with subsequent excessive loading of the pergola roof by snow.

The ARTOSI SLIDE PANELS system is a light-weight sliding system which is considered a shading element and does not replace doors and door structures in building openings. Depending on the selected filling, the system serves as a shading element.

The sliding system does not ensure 100 % water-, snow-, and wind-tightness.

Wind is likely to cause vibration and deflection of the panels. Vibration may be both audible and visible. Panel deflection is reversible and does not affect functionality of the system.

Screen ALFA and ALFA PLUS in a common box 110 mm with ARTOSI SLIDE PANELS wall

When configuring the screen roller shutters **ALFA / ALFA PLUS** and the **ARTOSI SLIDE PANELS** wall together, the necessary dimensions of the individual elements are taken into account in the configuration.

Additional assembly to the existing ALFA / ALFA PLUS screen roller shutter

In the case of retrofitting the sliding panel wall to the existing ALFA screen roller shutter, it is necessary to order a **common box (front part) with an integrated upper rail for guiding the sliding panels, individual sliding panels or a set of panels and a lower rail.**

- The common box (front part) is ordered within **separate rail** configuration.

The following applies for entering the order size:

Length of the upper rail = length of the extruded profile without side covers.

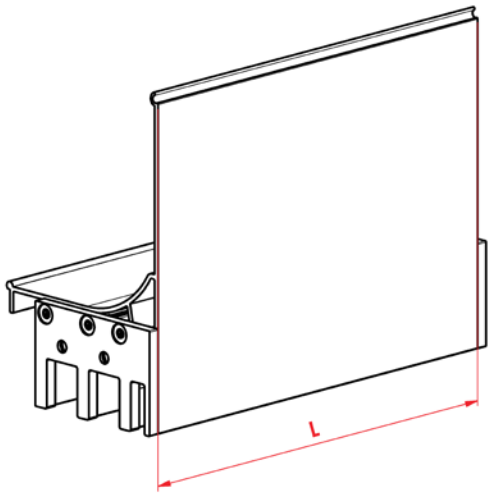

Entered width = width of the construction opening

Entered height (for a single panel or a panel set) = panel height; this value must be **calculated.**

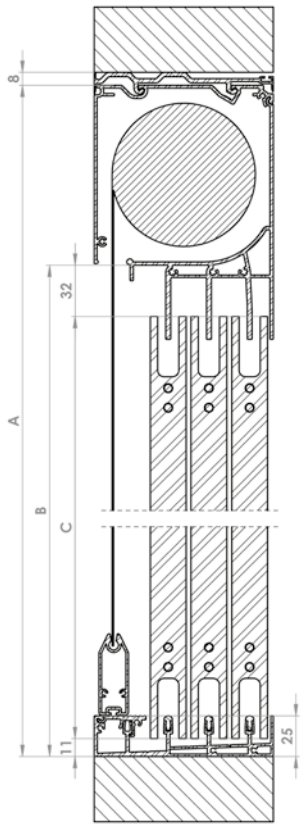

Installation

Check the dimensions and completeness of the delivery before starting the installation.

Note: anchoring material is not part of the delivery.

The substrate for the installation of the sliding system should be flat, sufficiently load-bearing, compact and crack-free.

If the system is to be installed to existing metallic or wooden structures, the structures must be free of any signs of damage to the supporting and anchoring elements and free of any horizontal and vertical deflection.

1. Installing the upper and lower profiles

Use all pre-drilled openings in both profiles to attach them. Place the lower guide rail so that the drains face the exterior. Attach using suitable anchoring material, selected according to the substrate. In case of uneven substrate, use plastic pads (part of delivery).

Any gaps between the supporting structure and guide rails must be filled with a suitable filler. In case of the lower rail, we recommend filling gaps exceeding 6 mm by low-expansion foam and then finish the edges by a suitable filler or aluminium L-section.

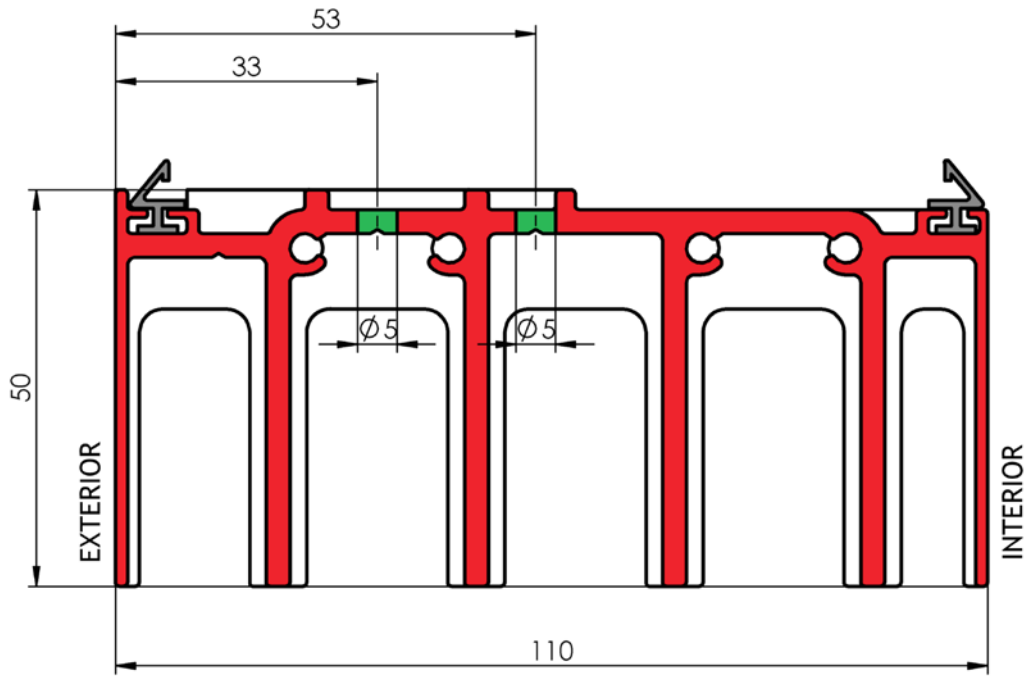

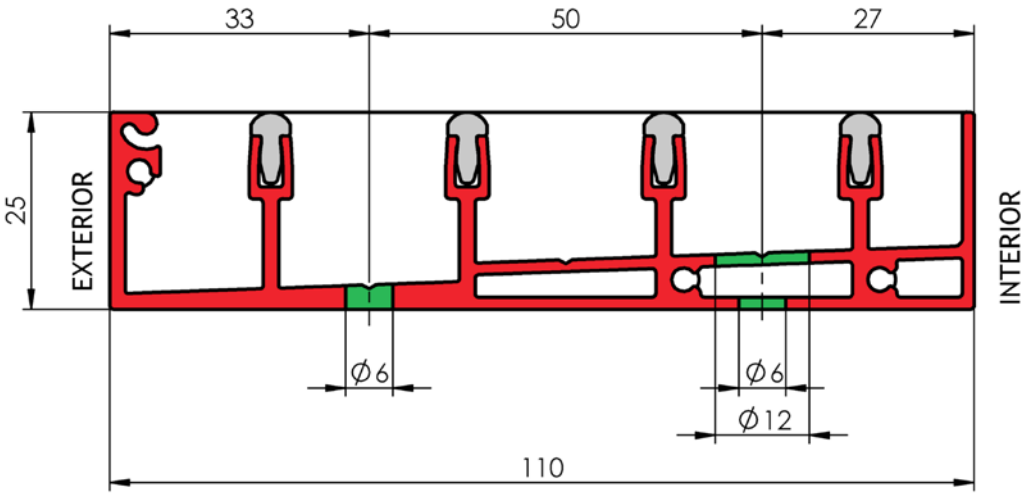

2. Installing the panels

Proceed with utmost caution when removing the panels from the transport pallet.

It is necessary to take into account the size, but primarily weight of the panels.

Sliding panels are arranged and marked in an ascending order to facilitate installation in the guide rails.

First, slide the upper part in the rail groove and then lower it to the lower supporting rail. This procedure applies to all the panels in succession according to their marking.

It is necessary to observe the panel sequence according to the purchase order to attain the required direction.

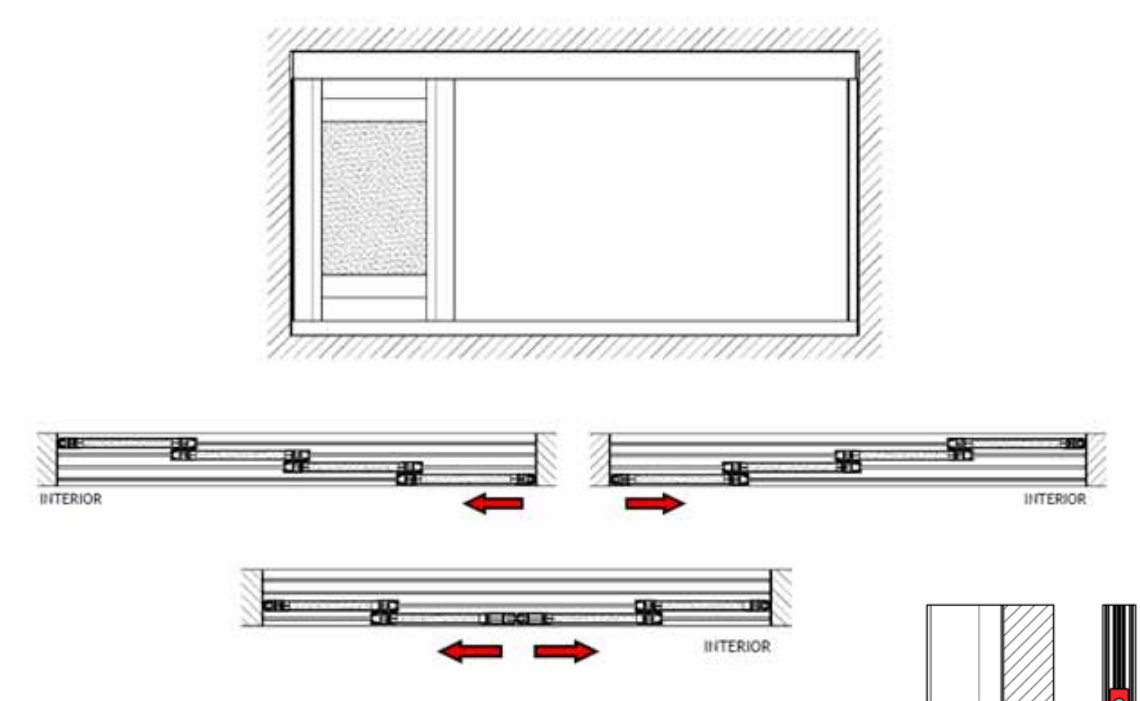

3. Adjusting the panels

Each panel is equipped with adjustable guide wheels on both sides.

To adjust them, use size 4 Allen key. The opening for inserting the key is located in the lower part of the panel side. By rotating the key to either side, adjust the verticality of the panels, so that they are visually aligned one after another.

This way, alignment of the individual wings will be attained.

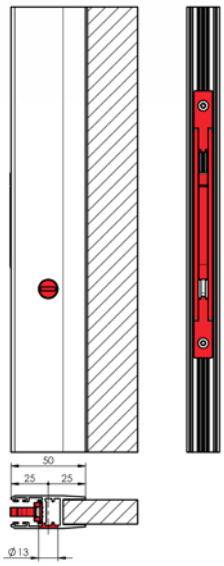

4. Installing the vertical finishing profiles

Fitting the finishing profile to the vertical groove of the first and last panels will determine the vertical installation axis for the installation of these profiles.

After pushing to the packing piece, mark the vertical axis to the packing piece and then attach the profiles by suitable fasteners. Compensate any vertical unevenness by plastic pads supplied. Remove excess material of the pads.

Gaps between the structure and vertical finishing profiles may be finished by a suitable filler or aluminium L-section.

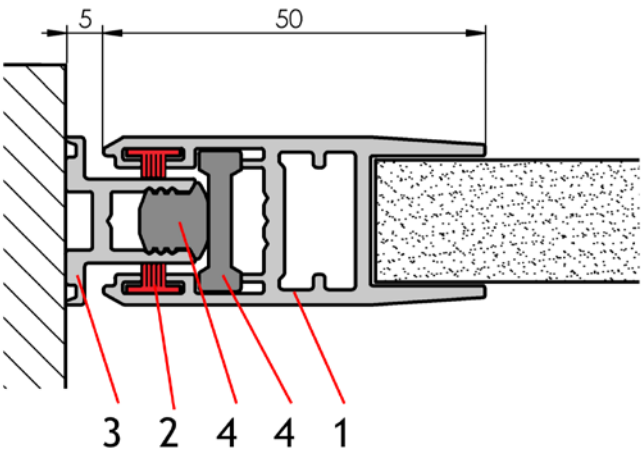

5. ASSEMBLY - HANDLE, LOCK AND LOCKING MECHANISM

The handle, lock and locking are pre-assembled as standard from the factory. The exception is the **CURTAIN** version, in which the handle must be mounted on one of the panels when assembling the product.

In the **CURTAIN** version, one central panel is delivered with a pre-assembled handle, or with a handle and lock. The handle for the opposite panel is supplied separately as a package. Included in the package is a disposable assembly template, which is used for precise positioning and pre-drilling of holes for the handle.

Based on the customer's request, the handle can also be supplied as a package for other designs. This requirement must be specified in the order note. **The lock is always delivered pre-assembled on the panel.**

ADJUSTMENT OPTIONS

5.1. LOCK COUNTER-PIECE / LOCKING

The counter-piece of the lock or locking allows adjustment in the horizontal and vertical direction.

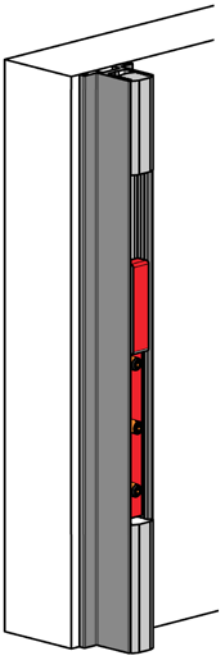

Adjusting the position of the counter-piece in the horizontal direction = adjusting width

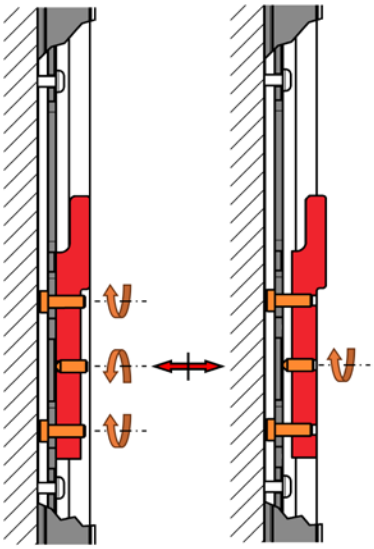

Adjusting the position of the counter-piece in the vertical direction = adjusting height

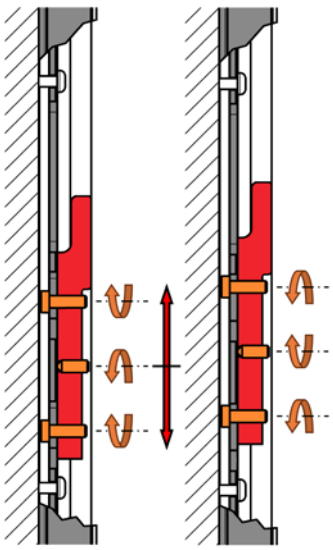

5.2. LOCK / HANDLE

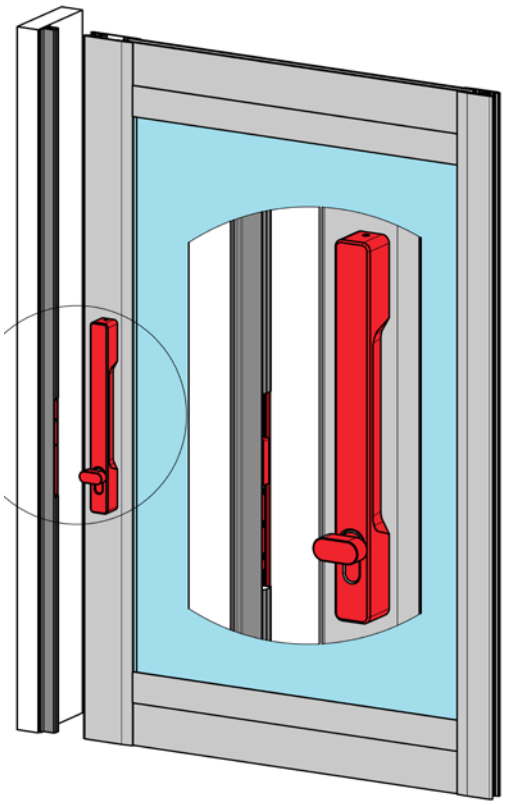

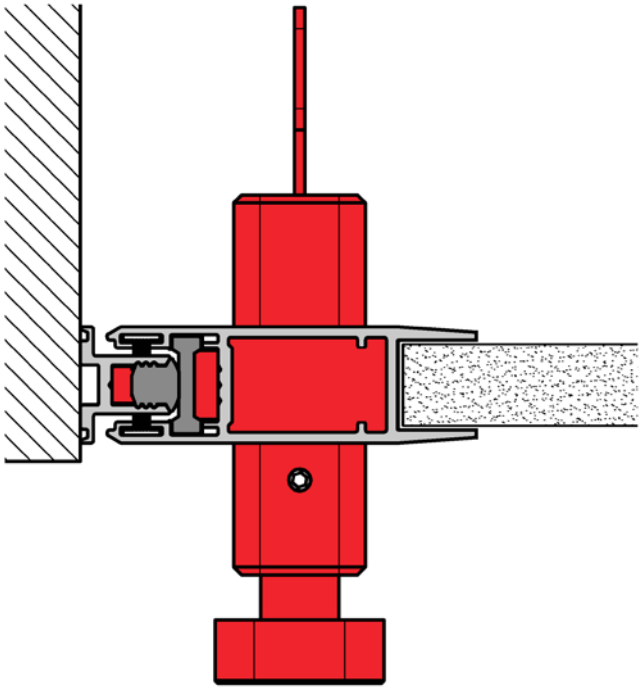

1. Move the panel with handle and lock up to the stop bar.
2. Turn the lock to the locked position. A hook comes out of the lock.
3. Set the counter-piece of the lock according to the procedure given in point 1. Lock *counter-piece / locking* to the same height as the groove on the hook, see the picture.

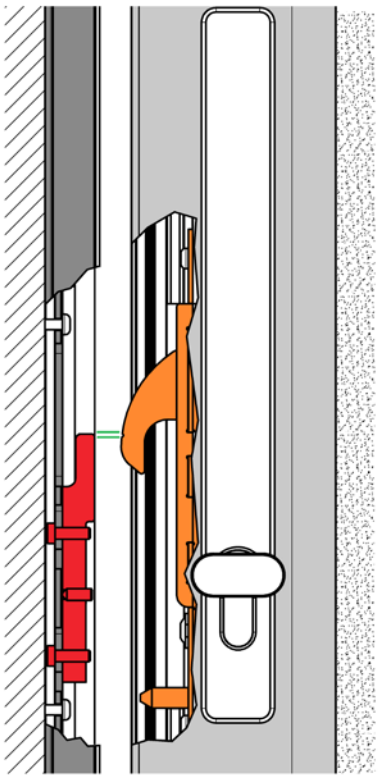

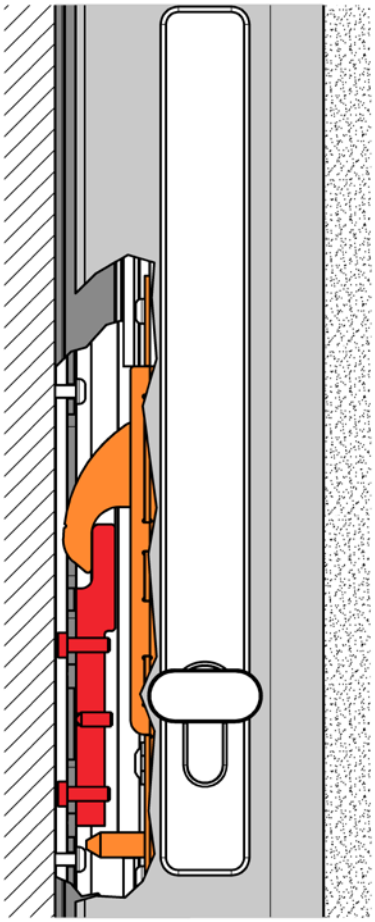

4. After correct adjustment, the panel can be locked and unlocked.

5.3. LOCKING MECHANISM

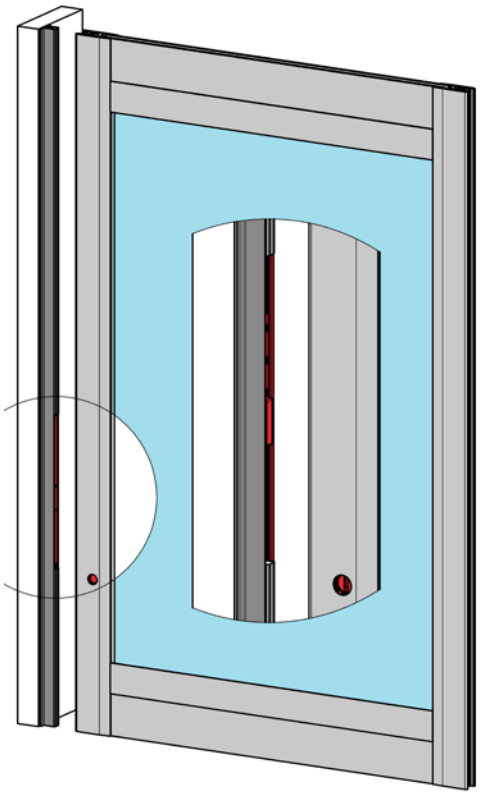

1. Move the panel with the locking up to the stop bar.
2. Lock into position.
3. Adjust the locking counter-piece and adjust its position according to the procedure mentioned in point *1. Lock counter-piece / locking* to the same height as the groove on the hook, see picture.
4. After the correct adjustment, the panel can be safely secured with the locking and subsequently unlocked again.

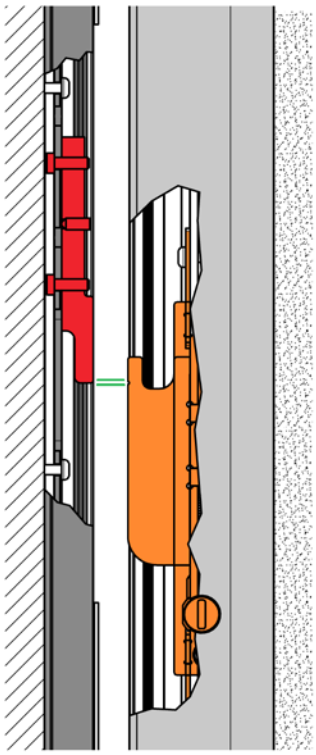

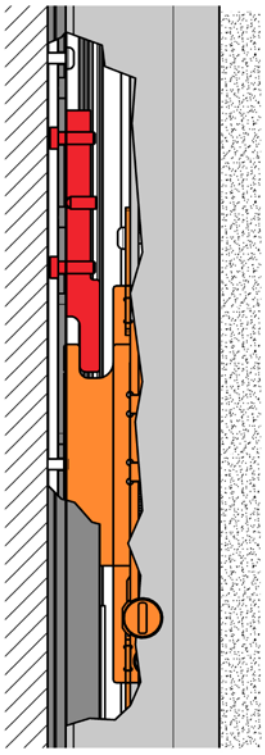

The position of the groove on the panel with the locking

The position of the groove indicates the current locking status:

- **groove in the horizontal position** – the panel is **unlocked,**
- **groove in the vertical position** – the panel is **locked.**

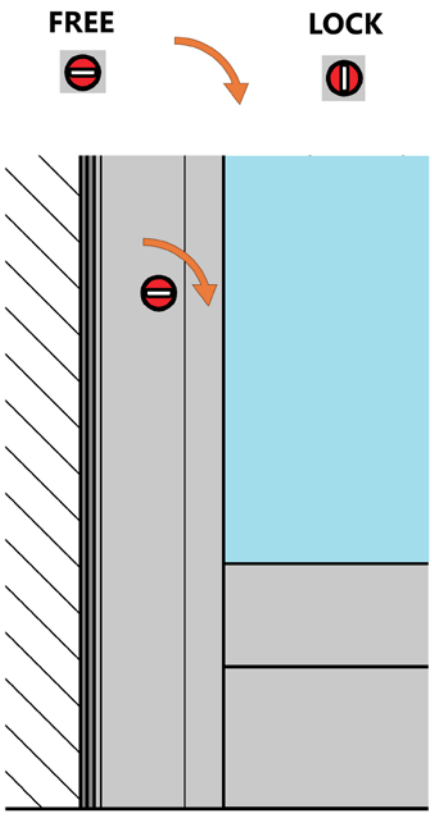

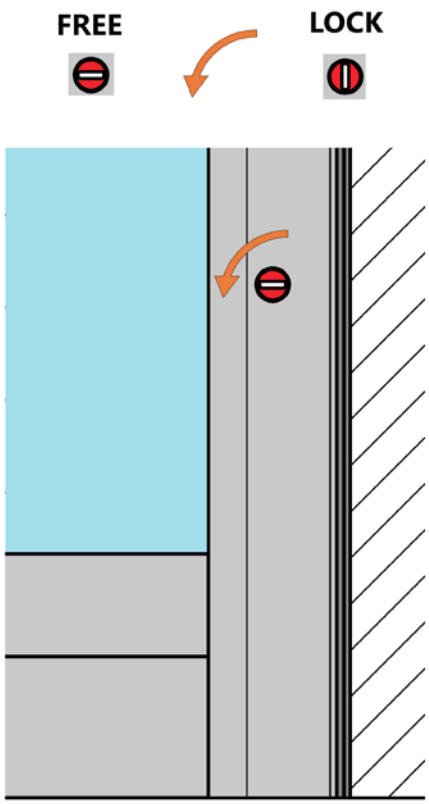

HANDLE ASSEMBLY - CURTAIN DESIGN

For the **CURTAIN** version, one central panel is delivered with a handle already mounted, or with a handle and lock. The handle for the other opposite panel is supplied separately as a package.

Install the handle as the last step, after you have completed adjusting the panels, lock, handle and counter-piece.

Use the provided disposable assembly template to fix the exact position of the handle. The template makes it possible to transfer the position of the handle from the already installed panel to the opposite panel and to precisely determine the sites for pre-drilling the holes.

When drilling, proceed according to the method of mounting the handle:

- **handle mounted only on one side of the panel** – pre-drill a hole for the fixing screw with a diameter **of Ø 3 mm**
- **handle mounted on both sides of the panel** – pre-drill a hole for the fixing screw with a diameter of **Ø 6 mm.**

After drilling the holes, screw the pins on, fit the handle and secure the handle with grub screws. Check its correct position and firm attachment.

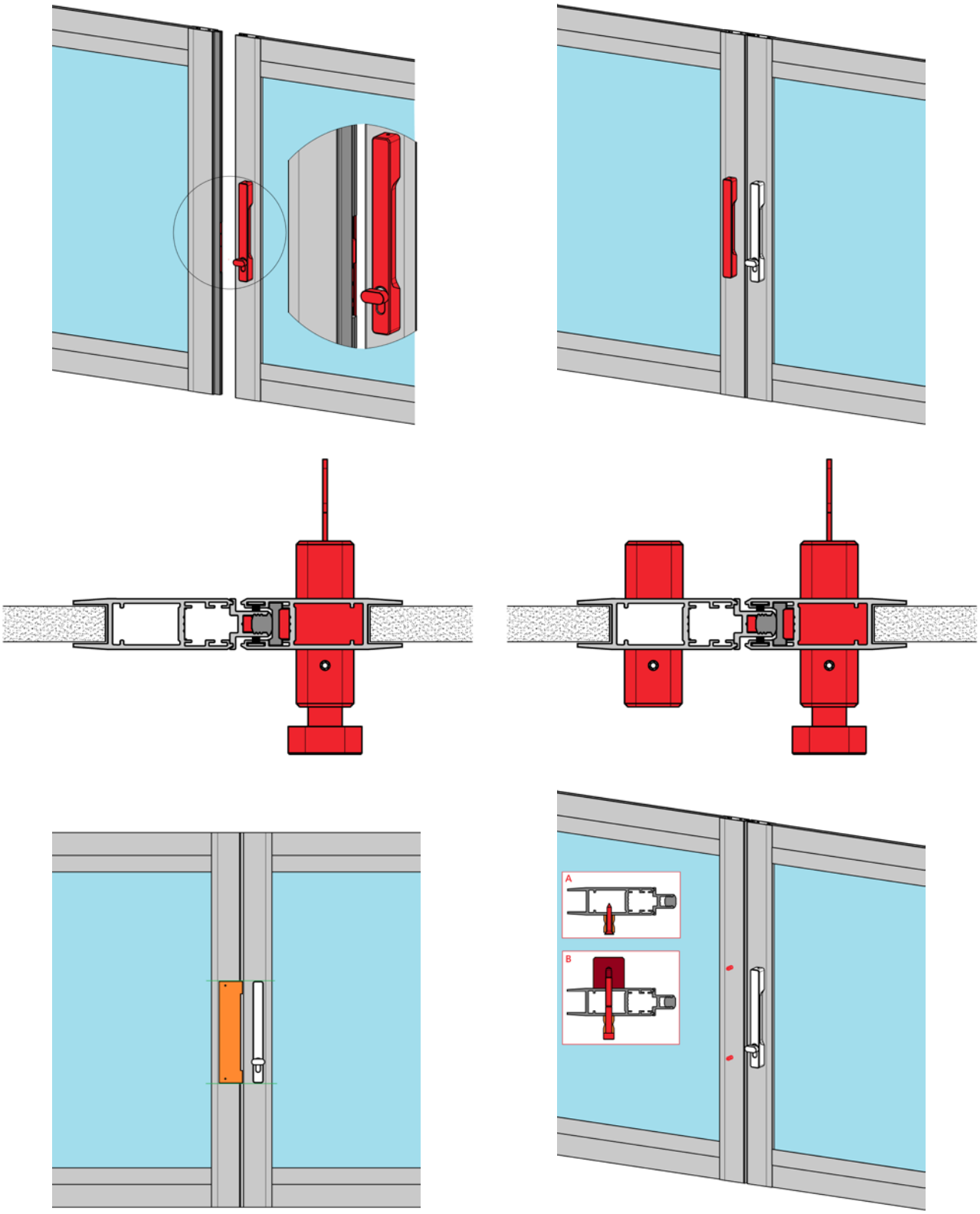

Screen ALFA and ALFA PLUS in a common box 110 mm with the ARTOSI SLIDE PANELS wall

Assembly

The box must always be firmly anchored to the adjacent support structure, e.g. to a stay of the ARTOSI pergola or another suitable building structure.

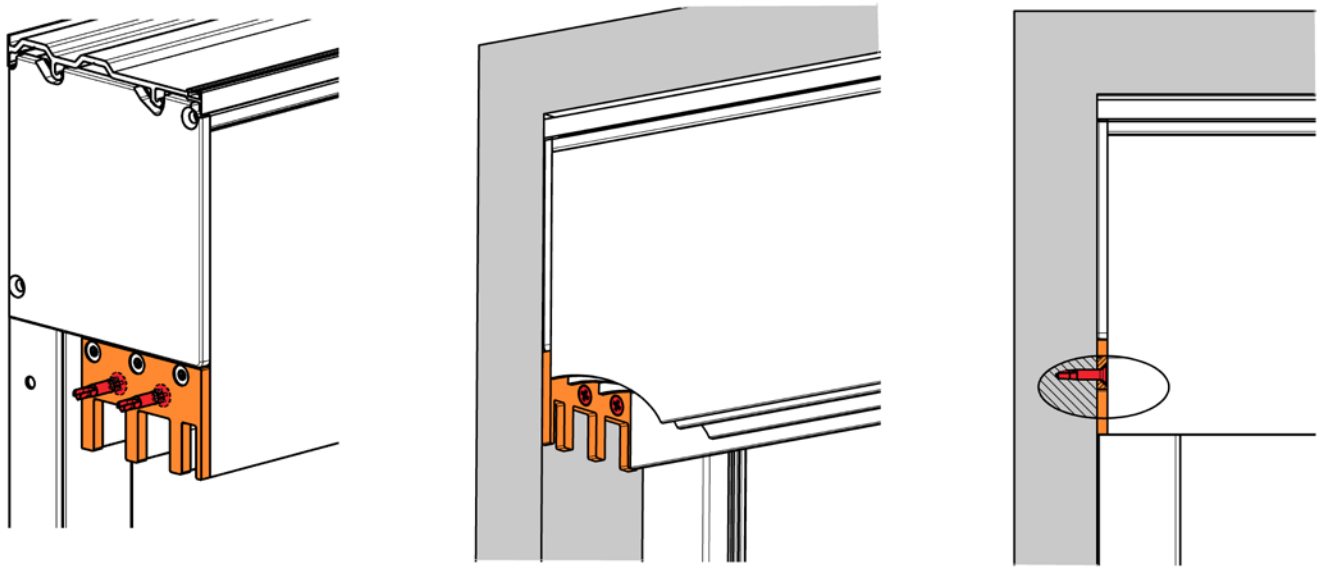

Addition of SLIDE PANELS walls under the existing ALFA / ALFA PLUS screen

Required configuration / initial condition:
- Installed ALFA / ALFA PLUS screen with 110 mm box
- PERGOLA way of attachment, alternatively WALL / CEILING way
- Screen ALFA / ALFA PLUS must be mounted between supporting elements (e.g. between ARTOSI pergola stands)
- A 840 folding guide rail must be shortened with regard to the installation of the bottom rail. **The recommended shortening is 25 mm (bottom rail height)**

How to order the SLIDE PANELS wall for installation under the existing ALFA / ALFA PLUS screen

1. Ordering a complete SLIDE PANELS set

When configuring the entire panel wall assembly, select the **„Under the screen - already existing“** mounting option in the first step.

In this configuration, it will be delivered as follows:
- new front part of the screen box with an integrated upper rail of the sliding wall,
- lower rail,
- set of panels according to the chosen configuration.

2. Ordering separate panels and SLIDE PANELS rails

This variant is mainly intended for additional ordering of individual parts or for solving atypical assembly situations.

You can order separately:
- upper rail including the new front part of the ALFA / ALFA PLUS screen box,
- lower rail,
- assembly of panels or individual panels of the sliding wall with no rails.

ISOTRA a.s.

Bílovecká 2411/1, 746 01 Opava

Tel.: **+420 553 685 111**
E-mail: isotra@isotra.cz

www.isotra.com

Released: 10/2026

ISOTRA Partner

... protecting your privacy.