EN

ISOTRA®

TECHNICAL MANUAL

EXTERIOR BLINDS

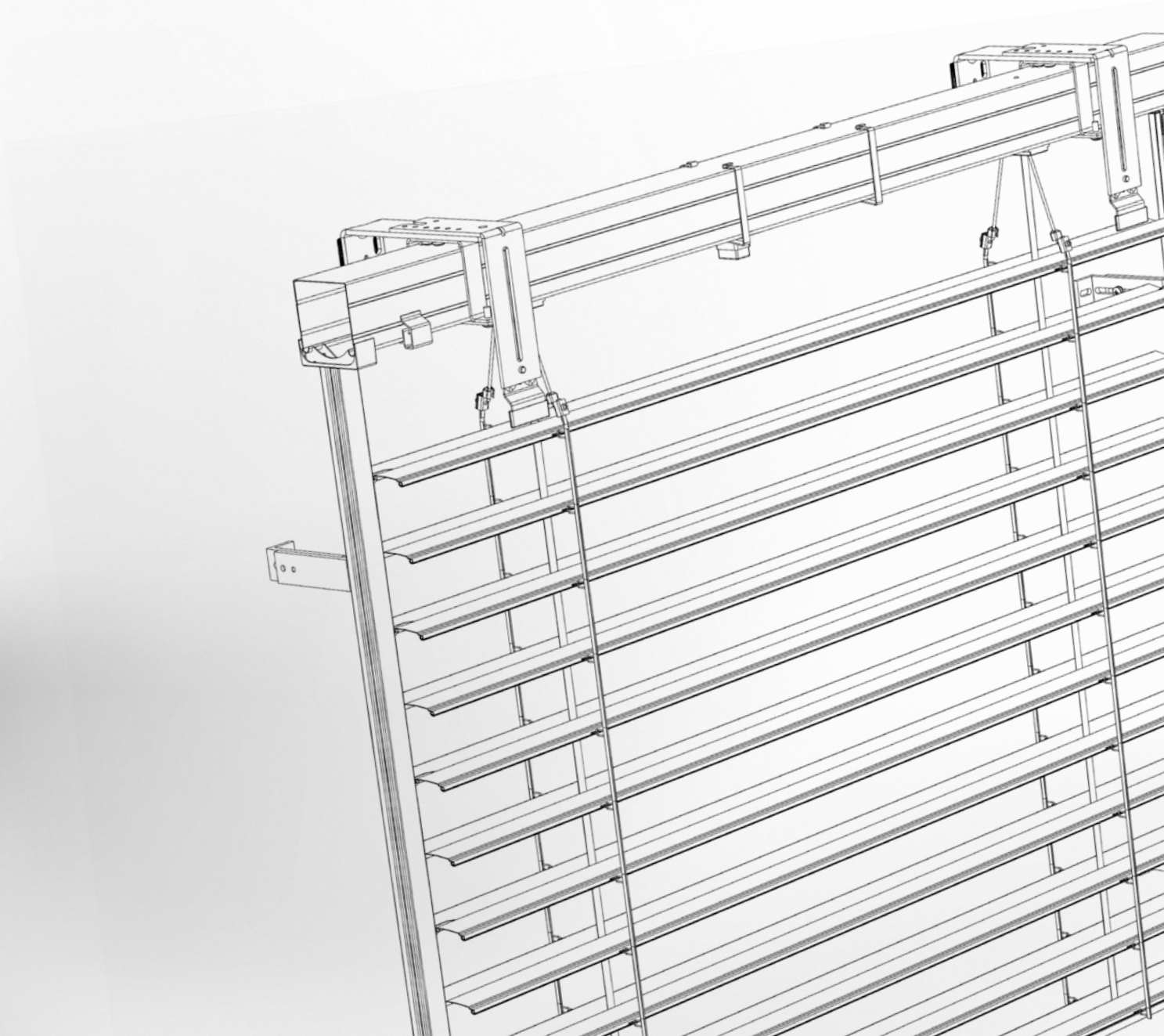

Table of contents – Exterior blinds

CE Product Marking 3
Basic Technical Specification 7

Product Tolerances 8

Calculation of Solar and Light Transmittance 9
Wound Up Height 11
Color coordination 15

Cetta 50 17
Cetta 50 – cord 19
Cetta 50 – handle 20
Cetta 50 – motor 22

Cetta 65, 80, 80 Slim, 60 Flexi, 80 Flexi 26
Cetta 65, 80 – handle 27
Cetta 65, 80 – motor 29
Cetta 60 Flexi 31
Cetta 80 Flexi 33
Cetta 100 Flexi 35

Setta 65, 90 57
Setta 65, 90 – handle 58
Setta 65, 90 – motor 60

Zetta 70, 90 67
Zetta 70, 90 – handle 68
Zetta 70, 90 – motor 70

Shapes of Exterior Blind Slats 80

Control 85
Control - handle 85
Control – motor 88

Guidance 91
Guidance - wire 93
Guidance – guiding channel 96
Guiding Channel Holders 101

Holders for Exterior Blinds 118

Types of Front Covers 133

Measurement and Assembly 137

Alternative Designs of Exterior Blinds 143
DUO System 144
Atypical Designs of Exterior Blinds 145
Connected Exterior Blinds 146
Double Head Rail Exterior Blinds 147
Exterior Blind Windstabil 148
Solar power supply of exterior blinds 149

Special Designs 152
Exterior blinds Titan 90 153
Sloped Blind Cetta 80F TE 162
Corner exterior blind 170
Facade Exterior Blinds 176
Lintel Exterior Blinds HELUZ 182
Linterl Exterior Blinds HELUZ Family 185

Products in this assortment group are always measured from the interior.

Due to continuous development of our products, we reserve the right to slight differences in design from the illustrations.

ISOTRA *Quality*

A mark symbolising long tradition, inestimable investment into development, the use of quality materials, state-of the-art technologies, reliable work from hundreds of employees and numerous other parameters, constituting one entity – the final product of ISOTRA.

CE Product Marking

All exterior blinds of ISOTRA a.s.
comply with the standard ČSN EN 13659+A1:2009

European Marking of CE Compliance – marking on products

CE

ISOTRA a.s.
Bílovecká 2411/1, 746 01 Opava

12

EN 13659:2015
ZETTA 90
CPR 008/2017
Exterior sun visor
Wind resistance: 0 – 4
Additional thermal resistance ΔR:0,08 m2.K/W
Total solar energy transmittance gtot: 0,032 - 0,094

Note: Pattern of CE label

Wind Resistance of Exterior Blinds

The wind resistance tests were conducted by Centrum stavebního inženýrství, a.s., Zlín, according to standard ČSN EN 13659+A1:2009.

Cetta 50 - wire

Essential characteristics		Performance									
Wind resistance	Width of construction hole L (mm)	L < 2 000		2 000 < L <= 3 000		3 000 < L <= 4 000		4 000 < L <= 4 500		4 500 < L <= 4 800	
	Standard EN/Beaufort	13659	Beaufort	13659	Beaufort	13659	Beaufort	13659	Beaufort	13659	Beaufort
	Wind resistance class	1	4	0	3	0	2	0	1	0	0
	Max. wind speed vmax (km/h)	28		19		11		5		1	
	Max. effective height wing	Hmax = 2500mm									
	Width of construction hole L (mm)	L < 2 000		2 000 < L <= 3 000		3 000 < L <= 4 000		4 000 < L <= 4 500		4 000 < L <= 4 500	
	Wind resistance class	0	3	0	2	0	1	0	0	0	0
	Max. wind speed vmax (km/h)	19		11		5		1		1	
	Max. effective height wing	Hmax = 4000mm									
Additional thermal resistance ΔR		0,08 (m2.K/W)									
Total solar energy transmittance gtot		0,032 - 0,094 (according to the selected slat color)*									

Cetta 65 - channel

Essential characteristics		Performance							
Wind resistance	Width of construction hole L (mm)	L <= 2 000		2 000 < L <= 3 000		3 000 < L <= 4 000		4 000 < L <= 4 500	
	Standard EN/Beaufort	13659	Beaufort	13659	Beaufort	13659	Beaufort	13659	Beaufort
	Wind resistance class	4	7	3	6	2	5	1	4
	Max. wind speed vmax (km/h)	61		49		38		28	
	Max. effective height wing	Hmax = 4000mm							
	Width of construction hole L (mm)	4 500 < L <= 5 000		5 000 < L <= 5 500		5 500 < L <= 5 800		5 800 < L <= 6 000	
	Wind resistance class	0	3	0	2	0	1	0	0
	Max. wind speed vmax (km/h)	19		11		5		1	
	Max. effective height wing	Hmax = 4000mm							
Additional thermal resistance ΔR		0,08 (m2.K/W)							
Total solar energy transmittance gtot		0,032 - 0,094 (according to the selected slat color)*							

Cetta 65 - wire

Essential characteristics		Performance													
Wind resistance	Width of construction hole L (mm)	L <= 2 000		2 000 < L <= 3 000		3 000 < L <= 4 000		4 000 < L <= 4 500		4 500 < L <= 4 800		4 800 < L <= 5 000		5 000 < L <= 6 000	
	Standard EN/Beaufort	13659	Beaufort	13659	Beaufort	13659	Beaufort	13659	Beaufort	13659	Beaufort	13659	Beaufort	13659	Beaufort
	Wind resistance class	3	6	2	5	1	4	0	3	0	2	0	1	0	0
	Max. wind speed vmax (km/h)	49		38		28		19		11		5		1	
	Max. effective height wing	Hmax = 2500mm													
	Width of construction hole L (mm)	L <= 2 000		2 000 < L <= 3 000		3 000 < L <= 4 000		4 000 < L <= 4 500		4 500 < L <= 4 800		4 800 < L <= 5 000		5 000 < L <= 6 000	
	Wind resistance class	2	5	1	4	0	3	0	2	0	1	0	0	0	0
	Max. wind speed vmax (km/h)	38		28		19		11		5		0		0	
	Max. effective height wing	Hmax = 4000mm													
Additional thermal resistance ΔR		0,08 (m2.K/W)													
Total solar energy transmittance gtot		0,032 - 0,094 (according to the selected slat color)*													

Setta 65 - channel

Essential characteristics		Performance							
Wind resistance	Width of construction hole L (mm)	L <= 2 000		2 000 < L <= 3 000		3 000 < L <= 4 000		4 000 < L <= 4 500	
	Standard EN/Beaufort	13659	Beaufort	13659	Beaufort	13659	Beaufort	13659	Beaufort
	Wind resistance class	5	8	4	7	3	6	2	5
	Max. wind speed vmax (km/h)	74		61		49		38	
	Max. effective height wing	Hmax = 4000mm							
	Width of construction hole L (mm)	4 500 < L <= 5 000		5 000 < L <= 5 500		5 500 < L <= 5 800		5 800 < L <= 6 000	
	Wind resistance class	1	4	0	3	0	2	0	1
	Max. wind speed vmax (km/h)	28		19		11		5	
	Max. effective height wing	Hmax = 4000mm							
Additional thermal resistance ΔR		0,08 (m2.K/W)							
Total solar energy transmittance gtot		0,032 - 0,094 (according to the selected slat color)*							

Setta 65 - wire

Essential characteristics		Performance											
Wind resistance	Width of construction hole L (mm)	L <= 2 000		2 000 < L <= 3 000		3 000 < L <= 4 000		4 000 < L <= 4 500		4 500 < L <= 4 800		4 800 < L <= 5 000	
	Standard EN/Beaufort	13659	Beaufort	13659	Beaufort	13659	Beaufort	13659	Beaufort	13659	Beaufort	13659	Beaufort
	Wind resistance class	3	6	2	5	1	4	0	3	0	2	0	1
	Max. wind speed vmax (km/h)	49		38		28		19		11		5	
	Max. effective height wing	Hmax = 2500mm											
	Width of construction hole L (mm)	L <= 2 000		2 000 < L <= 3 000		3 000 < L <= 4 000		4 000 < L <= 4 500		4 500 < L <= 4 800		4 800 < L <= 5 000	
	Wind resistance class	2	5	1	4	0	3	0	2	0	1	0	0
	Max. wind speed vmax (km/h)	38		28		19		11		5		1	
	Max. effective height wing	Hmax = 4000mm											
Additional thermal resistance ΔR		0,08 (m2.K/W)											
Total solar energy transmittance gtot		0,032 - 0,094 (according to the selected slat color)*											

Setta 90 - channel

Essential characteristics		Performance							
Wind resistance	Width of construction hole L (mm)	L <= 2 000		2 000 < L <= 3 000		3 000 < L <= 4 000		4 000 < L <= 4 500	
	Standard EN/Beaufort	13659	Beaufort	13659	Beaufort	13659	Beaufort	13659	Beaufort
	Wind resistance class	5	8	4	7	3	6	2	5
	Max. wind speed vmax (km/h)	74		61		49		38	
	Max. effective height wing	Hmax = 4000mm							
	Width of construction hole L (mm)	4 500 < L <= 5 000		5 000 < L <= 5 500		5 500 < L <= 5 800		5 800 < L <= 6 000	
	Wind resistance class	1	4	0	3	0	2	0	1
	Max. wind speed vmax (km/h)	28		19		11		5	
	Max. effective height wing	Hmax = 4000mm							
Additional thermal resistance ΔR		0,08 (m2.K/W)							
Total solar energy transmittance gtot		0,032 - 0,094 (according to the selected slat color)*							

Setta 90 - wire

Essential characteristics		Performance											
Wind resistance	Width of construction hole L (mm)	L <= 2 000		2 000 < L <= 3 000		3 000 < L <= 4 000		4 000 < L <= 4 500		4 500 < L <= 4 800		4 800 < L <= 5 000	
	Standard EN/Beaufort	13659	Beaufort	13659	Beaufort	13659	Beaufort	13659	Beaufort	13659	Beaufort	13659	Beaufort
	Wind resistance class	3	6	2	5	1	4	0	3	0	2	0	1
	Max. wind speed vmax (km/h)	49		38		28		19		11		5	
	Max. effective height wing	Hmax = 2500mm											
	Width of construction hole L (mm)	L <= 2 000		2 000 < L <= 3 000		3 000 < L <= 4 000		4 000 < L <= 4 500		4 500 < L <= 4 800		4 800 < L <= 5 000	
	Wind resistance class	2	5	1	4	0	3	0	2	0	1	0	0
	Max. wind speed vmax (km/h)	38		28		19		11		5		1	
	Max. effective height wing	Hmax = 4000mm											
Additional thermal resistance ΔR		0,08 (m2.K/W)											
Total solar energy transmittance gtot		0,032 - 0,094 (according to the selected slat color)*											

Zetta 70 - channel

Essential characteristics		Performance							
Wind resistance	Width of construction hole L (mm)	L <= 2 000		2 000 < L <= 3 000		3 000 < L <= 4 000		4 000 < L <= 4 500	
	Standard EN/Beaufort	13659	Beaufort	13659	Beaufort	13659	Beaufort	13659	Beaufort
	Wind resistance class	4	7	3	6	2	5	1	4
	Max. wind speed vmax (km/h)	61		49		38		28	
	Max. effective height wing	Hmax = 4000mm							
	Width of construction hole L (mm)	4 500 < L <= 5 000		5 000 < L <= 5 500		5 500 < L <= 5 800		5 800 < L <= 6 000	
	Wind resistance class	0	3	0	2	0	1	0	0
	Max. wind speed vmax (km/h)	19		11		5		1	
	Max. effective height wing	Hmax = 4000mm							
Additional thermal resistance ΔR		0,08 (m2.K/W)							
Total solar energy transmittance gtot		0,032 - 0,094 (according to the selected slat color)*							

Zetta 70 - wire

Essential characteristics		Performance													
Wind resistance	Width of construction hole L (mm)	L <= 2 000		2 000 < L <= 3 000		3 000 < L <= 4 000		4 000 < L <= 4 500		4 500 < L <= 4 800		4 800 < L <= 5 000		5 000 < L <= 6 000	
	Standard EN/Beaufort	13659	Beaufort	13659	Beaufort	13659	Beaufort	13659	Beaufort	13659	Beaufort	13659	Beaufort	13659	Beaufort
	Wind resistance class	3	6	2	5	1	4	0	3	0	2	0	1	0	0
	Max. wind speed vmax (km/h)	49		38		28		19		11		5		1	
	Max. effective height wing	Hmax = 2500mm													
	Width of construction hole L (mm)	L <= 2 000		2 000 < L <= 3 000		3 000 < L <= 4 000		4 000 < L <= 4 500		4 500 < L <= 4 800		4 800 < L <= 5 000		5 000 < L <= 6 000	
	Wind resistance class	2	5	1	4	0	3	0	2	0	1	0	0	0	0
	Max. wind speed vmax (km/h)	38		28		19		11		5		1		0	
	Max. effective height wing	Hmax = 4000mm													
Additional thermal resistance ΔR		0,08 (m2.K/W)													
Total solar energy transmittance gtot		0,032 - 0,094 (according to the selected slat color)*													

Zetta 90 - channel

Essential characteristics		Performance							
Wind resistance	Width of construction hole L (mm)	L <= 1 000		1 000 < L <= 2 000		2 000 < L <= 3 000		3 000 < L <= 4 000	
	Standard EN/Beaufort	13659	Beaufort	13659	Beaufort	13659	Beaufort	13659	Beaufort
	Wind resistance class	6	9	5	8	4	7	3	6
	Max. wind speed vmax (km/h)	88		74		61		49	
	Max. effective height wing	Hmax = 4000mm							
	Width of construction hole L (mm)	4 000 < L <= 4 500		4 500 < L <= 5 000		5 000 < L <= 5 500		5 500 < L <= 6 000	
	Wind resistance class	2	5	1	4	0	3	0	2
	Max. wind speed vmax (km/h)	38		28		19		11	
	Max. effective height wing	Hmax = 4000mm							
Additional thermal resistance ΔR		0,08 (m^2.K/W)							
Total solar energy transmittance gtot		0,032 - 0,094 (according to the selected slat color)*							

Zetta 90 - wire

Essential characteristics		Performance													
Wind resistance	Width of construction hole L (mm)	L <= 2 000		2 000 < L <= 3 000		3 000 < L <= 4 000		4 000 < L <= 4 500		4 500 < L <= 4 800		4 800 < L <= 5 000		5 000 < L <= 6 000	
	Standard EN/Beaufort	13659	Beaufort	13659	Beaufort	13659	Beaufort	13659	Beaufort	13659	Beaufort	13659	Beaufort	13659	Beaufort
	Wind resistance class	3	6	2	5	1	4	0	3	0	2	0	1	0	0
	Max. wind speed vmax (km/h)	49		38		28		19		11		5		1	
	Max. effective height wing	Hmax = 2500mm													
	Width of construction hole L (mm)	L <= 2 000		2 000 < L <= 3 000		3 000 < L <= 4 000		4 000 < L <= 4 500		4 500 < L <= 4 800		4 800 < L <= 5 000		5 000 < L <= 6 000	
	Wind resistance class	2	5	1	4	0	3	0	2	0	1	0	0	0	0
	Max. wind speed vmax (km/h)	38		28		19		11		5		1		0	
	Max. effective height wing	Hmax = 4000mm													
Additional thermal resistance ΔR		0,08 (m2.K/W)													
Total solar energy transmittance gtot		0,032 - 0,094 (according to the selected slat color)*													

Z90 - corner

Essential characteristics		Performance							
Odolnost proti větru	Width of construction hole L (mm)	L <= 1 000		1 000 < L <= 2 000		2 000 < L <= 3 000		3 000 < L <= 4 000	
	Standard EN/Beaufort	13659	Beaufort	13659	Beaufort	13659	Beaufort	13659	Beaufort
	Wind resistance class	4	7	3	6	2	5	1	4
	Max. wind speed vmax (km/h)	v ≤ 61 km/h		v ≤ 49 km/h		v ≤ 38 km/h		v ≤ 28 km/h	
	Max. effective height wing	Hmax = 4000mm							
	Width of construction hole L (mm)	4 000 < L <= 4 500		4 500 < L <= 5 000		5 000 < L <= 5 500		5 500 < L <= 6 000	
	Wind resistance class	(0)	3	(0)	2	(0)	1	(0)	0
	Max. wind speed vmax (km/h)	v ≤ 19 km/h		v ≤ 11 km/h		v ≤ 5 km/h		v ≤ 1 km/h	
	Max. effective height wing	Hmax = 4000mm							
Additional thermal resistance ΔR		0,08 (m^2.K/W)							
Total solar energy transmittance gtot		0,032 - 0,094 (according to the selected slat color)*							

The width of the construction opening means the sum of the widths of both individual blinds that make up a complete set of the given corner blind.

Cetta 60 Flexi - wire

Essential characteristics		Performance											
Wind resistance	Width of construction hole L (mm)	L <= 800		800 < L <= 2 000		2 000 < L <= 3 000		3 000 < L <= 4000		4000 < L <= 4 500		4 500 < L <= 4 800	
	Standard EN/Beaufort	13659	Beaufort	13659	Beaufort	13659	Beaufort	13659	Beaufort	13659	Beaufort	13659	Beaufort
	Wind resistance class	3	6	2	5	1	4	0	3	0	2	0	1
	Max. wind speed vmax (km/h)	49		38		28		19		11		5	
	Max. effective height wing	Hmax = 2500mm											
	Width of construction hole L (mm)	L <= 800		800 < L <= 2 000		2 000 < L <= 3 000		3 000 < L <= 4000		4000 < L <= 4 500		4 500 < L <= 4 800	
	Wind resistance class	2	5	1	4	0	3	0	2	0	1	0	0
	Max. wind speed vmax (km/h)	38		28		19		11		5		1	
	Max. effective height wing	Hmax = 4000mm											
Additional thermal resistance ΔR		0,08 (m^2.K/W)											
Total solar energy transmittance gtot		0,032 - 0,094 (according to the selected slat color)*											

Cetta 60 Flexi - channel

Essential characteristics		Performance							
Wind resistance	Width of construction hole L (mm)	L <= 1 000		1 000 < L <= 2 000		2 000 < L <= 3 000		3 000 < L <= 4 000	
	Standard EN/Beaufort	13659	Beaufort	13659	Beaufort	13659	Beaufort	13659	Beaufort
	Wind resistance class	4	7	3	6	2	5	1	4
	Max. wind speed vmax (km/h)	61		49		38		28	
	Max. effective height wing	Hmax = 4000mm							
	Width of construction hole L (mm)	4 000 < L <= 4 500		4 500 < L <= 5 000		5 000 < L <= 5 500		5 500 < L <= 6 000	
	Wind resistance class	0	3	0	2	0	1	0	0
	Max. wind speed vmax (km/h)	19		11		5		1	
	Max. effective height wing	Hmax = 4000mm							
Additional thermal resistance ΔR		0,08 (m^2.K/W)							
Total solar energy transmittance gtot		0,032 - 0,094 (according to the selected slat color)*							

Cetta 80 Flexi - wire

Essential characteristics		Performance											
Wind resistance	Width of construction hole L (mm)	L <= 2 000		2 000 < L <= 2 500		2 500 < L <= 3 000		3 000 < L <= 3 400		3 400 < L <= 3 800		3 800 < L <= 4 000	
	Standard EN/Beaufort	13659	Beaufort	13659	Beaufort	13659	Beaufort	13659	Beaufort	13659	Beaufort	13659	Beaufort
	Wind resistance class	2	5	1	4	0	3	0	2	0	1	0	0
	Max. wind speed vmax (km/h)	38		28		19		11		5		1	
	Max. effective height wing	Hmax = 2500mm											
	Width of construction hole L (mm)	L <= 2 000		2 000 < L <= 2 500		2 500 < L <= 3 000		3 000 < L <= 3 400		3 400 < L <= 3 800		3 800 < L <= 4 000	
	Wind resistance class	1	4	0	3	0	2	0	1	0	0	0	0
	Max. wind speed vmax (km/h)	28		19		11		5		1		1	
	Max. effective height wing	Hmax = 4000mm											
Additional thermal resistance ΔR		0,08 (m2.K/W)											
Total solar energy transmittance gtot		0,032 - 0,094 (according to the selected slat color)*											

Cetta 80 Flexi - channel

Essential characteristics		Performance							
Wind resistance	Width of construction hole L (mm)	L <= 2 000		2 000 < L <= 3 000		3 000 < L <= 4 000		4 000 < L <= 4 500	
	Standard EN/Beaufort	13659	Beaufort	13659	Beaufort	13659	Beaufort	13659	Beaufort
	Wind resistance class	2	5	1	4	0	3	0	2
	Max. wind speed vmax (km/h)	38		28		19		11	
	Max. effective height wing	Hmax = 4000mm							
	Width of construction hole L (mm)	4 500 < L <= 5 000				5 000 < L <= 6 000			
	Wind resistance class	0		1		0		0	
	Max. wind speed vmax (km/h)	5				1			
	Max. effective height wing	Hmax = 4000mm							
Additional thermal resistance ΔR		0,08 (m2.K/W)							
Total solar energy transmittance gtot		0,032 - 0,094 (according to the selected slat color)*							

Cetta 80 Flexi - corner

Essential characteristics		Performance							
Wind resistance	Width of construction hole L (mm)**	L <= 1 000		1 000 < L <= 2 000		2 000 < L <= 3 000		3 000 < L <= 4 000	
	Standard EN/Beaufort	13659	Beaufort	13659	Beaufort	13659	Beaufort	13659	Beaufort
	Wind resistance class	4	7	3	6	2	5	1	4
	Max. wind speed vmax (km/h)	61		49		38		28	
	Max. effective height wing	Hmax = 4000mm							
	Width of construction hole L (mm)	4 000 < L <= 4 500		4 500 < L <= 5 000		5 000 < L <= 5 500		5 500 < L <= 6 000	
	Wind resistance class	0	3	0	2	0	1	0	0
	Max. wind speed vmax (km/h)	19		11		5		1	
	Max. effective height wing	Hmax = 4000mm							
Additional thermal resistance ΔR		0,08 (m^2.K/W)							
Total solar energy transmittance gtot		0,032 - 0,094 (according to the selected slat color)*							

**The width of the construction opening means the sum of the widths of both individual blinds that make up a complete set of the given corner blind.

Cetta 80 - wire

Essential characteristics		Performance													
Wind resistance	Width of construction hole L (mm)	L <= 2 000		2 000 < L <= 3 000		3 000 < L <= 4 000		4 000 < L <= 4 500		4 500 < L <= 4 800		4 800 < L <= 5 000		5 000 < L <= 6 000	
	Standard EN/Beaufort	13659	Beaufort	13659	Beaufort	13659	Beaufort	13659	Beaufort	13659	Beaufort	13659	Beaufort	13659	Beaufort
	Wind resistance class	3	6	2	5	1	4	0	3	0	2	0	1	0	0
	Max. wind speed vmax (km/h)	49		38		28		19		11		5		1	
	Max. effective height wing	Hmax = 2500mm													
	Width of construction hole L (mm)	L <= 2 000		2 000 < L <= 3 000		3 000 < L <= 4 000		4 000 < L <= 4 500		4 500 < L <= 4 800		4 800 < L <= 5 000		5 000 < L <= 6 000	
	Wind resistance class	2	5	1	4	0	3	0	2	0	1	0	0	0	0
	Max. wind speed vmax (km/h)	38		28		19		11		5		1		0	
	Max. effective height wing	Hmax = 4000mm													
Additional thermal resistance ΔR		0,08 (m2.K/W)													
Total solar energy transmittance gtot		0,032 - 0,094 (according to the selected slat color)*													

Cetta 80 - channel

Essential characteristics		Performance							
Wind resistance	Width of construction hole L (mm)	L <= 1 000		1 000 < L <= 2 000		2 000 < L <= 3 000		3 000 < L <= 4 000	
	Standard EN/Beaufort	13659	Beaufort	13659	Beaufort	13659	Beaufort	13659	Beaufort
	Wind resistance class	6	9	5	8	4	7	3	6
	Max. wind speed vmax (km/h)	88		74		61		49	
	Max. effective height wing	Hmax = 4000mm							
	Width of construction hole L (mm)	4 000 < L <= 4 500		4 500 < L <= 5 000		5 000 < L <= 5 500		5 500 < L <= 6 000	
	Wind resistance class	2	5	1	4	0	3	0	2
	Max. wind speed vmax (km/h)	38		28		19		11	
	Max. effective height wing	Hmax = 4000mm							
Additional thermal resistance ΔR		0,08 (m2.K/W)							
Total solar energy transmittance gtot		0,032 - 0,094 (according to the selected slat color)*							

Cetta 100 Flexi - wire

Essential characteristics		Performance											
Wind resistance	Width of construction hole L (mm)	L <= 800		800 < L <= 2 000		2 000 < L <= 3 000		3 000 < L <= 4 000		4000 < L <= 4 500		4 500 < L <= 4 800	
	Standard EN/Beaufort	13659	Beaufort	13659	Beaufort	13659	Beaufort	13659	Beaufort	13659	Beaufort	13659	Beaufort
	Wind resistance class	3	6	2	5	1	4	0	3	0	2	0	1
	Max. wind speed vmax (km/h)	49		38		28		19		11		5	
	Max. effective height wing	Hmax = 2500mm											
	Width of construction hole L (mm)	L <= 800		800 < L <= 2 000		2 000 < L <= 3 000		3 000 < L <= 4000		4000 < L <= 4 500		4 500 < L <= 4 800	
	Wind resistance class	2	5	1	4	0	3	0	2	0	1	0	0
	Max. wind speed vmax (km/h)	38		28		19		11		5		1	
	Max. effective height wing	Hmax = 4000mm											
Additional thermal resistance ΔR		0,08 (m^2.K/W)											
Total solar energy transmittance gtot		0,032 - 0,094 (according to the selected slat color)*											

Cetta 100 Flexi - channel

Essential characteristics		Performance							
Wind resistance	Width of construction hole L (mm)	L <= 1 000		1 000 < L <= 2 000		2 000 < L <= 3 000		3 000 < L <= 4 000	
	Standard EN/Beaufort	13659	Beaufort	13659	Beaufort	13659	Beaufort	13659	Beaufort
	Wind resistance class	4	7	3	6	2	5	1	4
	Max. wind speed vmax (km/h)	61		49		38		28	
	Max. effective height wing	Hmax = 4000mm							
	Width of construction hole L (mm)	4 000 < L <= 4 500		4 500 < L <= 5 000		5 000 < L <= 5 500		5 500 < L <= 6 000	
	Wind resistance class	0	3	0	2	0	1	0	0
	Max. wind speed vmax (km/h)	19		11		5		1	
	Max. effective height wing	Hmax = 4000mm							
Additional thermal resistance ΔR		0,08 (m^2.K/W)							
Total solar energy transmittance gtot		0,032 - 0,094 (according to the selected slat color)*							

Titan 90

Essential characteristics	Performance
Wind resistance	Class 6 (for all dimensions)
Additional thermal resistance ΔR	0,08 (m2.K/W)
Total solar energy transmittance gtot	0,032 - 0,094 (according to the selected slat color)*

Sloped blind Cetta 80F TE

Essential characteristics		Performance			
Wind resistance	Width of construction hole L (mm)	L <= 2 000		2 000 < L <= 2 500	
	Standard EN/Beaufort	13659	Beaufort	13659	Beaufort
	Wind resistance class	2	5	1	4
	Max. wind speed vmax (km/h)	38		28	
	Hmax (mm)	2 500		2 500	
	Wind resistance class	1	4	0	3
	Max. wind speed vmax (km/h)	19		11	
	Hmax (mm)	4 000		4 000	
Additional thermal resistance ΔR		0,08 (m2.K/W)			
Total solar energy transmittance gtot		0,032 - 0,094 (according to the selected slat color)*			

VIVA

Essential characteristics	Performance
Wind resistance	Class 3,4 (according to the slat type)
Additional thermal resistance ΔR	0,08 (m2.K/W)
Total solar energy transmittance gtot	0,032 - 0,094 (according to the selected slat color)*

Windstabil (Z90, C80, S90)

Essential characteristics		Performance											
Wind resistance	Width of construction hole L (mm)	L <= 2 000		2 000 < L <= 3 000		3 000 < L <= 4 000		4 000 < L <= 4 500		4 500 < L <= 5 000		5 000 < L <= 5 400	
	Standard EN/Beaufort	13659	Beaufort	13659	Beaufort	13659	Beaufort	13659	Beaufort	13659	Beaufort	13659	Beaufort
	Wind resistance class	5	8	4	7	3	6	2	5	1	4	0	3
	Max. wind speed vmax (km/h)	74		61		49		38		28		19	
	Max. effective height wing	Hmax = 2500mm											
	Width of construction hole L (mm)	L <= 2 000		2 000 < L <= 3 000		3 000 < L <= 4 000		4 000 < L <= 4 500		4 500 < L <= 5 000		5 000 < L <= 5 400	
	Wind resistance class	4	7	3	6	2	5	1	4	0	3	0	2
	Max. wind speed vmax (km/h)	61		49		38		28		19		11	
	Max. effective height wing	Hmax = 4000mm											
Additional thermal resistance ΔR		0,08 (m^2.K/W)											
Total solar energy transmittance gtot		0,032 - 0,094 (according to the selected slat color)*											

Basic Technical Specification

Engineering Limit Values

Type	Width (mm)		Height (mm)	Area (m^2)			Guidance	Slat Weight (kg per m^2)	Blind Weight (kg per m^2)	Holder Weight (kg per m^2)	6 Nm Motor Weight (kg)
	min.	max.	max.	Cord	Handle	Motor					
Cetta 50	400/600**	3150	3000	6	8	10	wire	0,76	2,1	0,087	1,84
Cetta 60 Flexi	600	4000	4000	-	8	16	wire / channel	1,31	3,30		
Cetta 65	600	6000*	4000	-	8	24	wire / channel	1,44	3,42	0,35	
Setta 65	600	6000*	4000	-	8	24	wire / channel	1,59	3,57		
Cetta 80 Flexi	600	4000	4000	-	8	16	wire / channel	1,12	3,55		
Cetta 100 Flexi	600	4000	4000	-	8	16	wire / channel	1,36	3,55		
Cetta 80 **Cetta 80 -Slim**	600	6000*	4000	-	8	24	wire / channel	1,54	3,47		
Zetta 70				-	8	18	wire / channel	1,60	3,55		
Zetta 90				-	8	24	wire / channel	1,56	3,53		
Setta 90				-	8	24	wire / channel	1,66	3,63		
Titan 90	600	2800	4000	-	-	8	wire / channel	2,1	-	-	

Note: Two guidance types (wire / guiding channel) can be combined, or Venetian blind with no guidance can be chosen, for some Venetian blind types.
*Note: The wider the blind, the lower its wind resistance class - see "Wind resistance of exterior blinds", page 3-4.
** motor

Warning: Inclined slat operation cannot be avoided with small width.

PRODUCT TOLERANCES

Manufacturer: **ISOTRA a.s., Bílovecká 2411/1, 746 01 Opava, ID: 47679191**
Product: **EXTERNAL BLINDS**

The review should help you to recognize the permissible limits of compliance and incompliance. At the same time the sheet will help you with reasoning as regards any unjust claims of the clients.
External blinds comprise of many metal and textile elements with various material features and production tolerances. Despite the optimally selected products, deviations from ideal function may occur even in case of new installation due to the product tolerances.
The external blinds are permanently exposed to the effect of weather, particularly temperature, moisture content, wind, and contamination. They have a great effect on the function and appearance of external blinds.
The basic function of the blinds is fulfilled when the slats are turning, and when the light is not directly focused on the glazing in closed state.
The deviations from the table values can be corrected by our technicians within a specific scope.
Please, be aware:
The specified limit values are created based on the actual state of technology, respective technical standards, and based on many years of experience.
The table values are valid only for the external blinds within the permitted production dimensions available in our actual technical catalogue.

	Feature	Description of deviation	Tolerance
1	Blind width	Blind width up to 2000 mm	max 3mm
		Blind width from 2000mm to 4000mm	max 4mm
		Blind width over 4,000mm	max 5mm
2	Blind height	Blind height up to 1,500mm	max 4mm
		Blind height from 1500 to 2500mm	max 6mm
		Blind height over 2,500mm	max 10mm
3	Packet height	Packet height up to 2,500mm	+/-0.5% height EL
		Packet is higher than 2,500mm	+/-1 % height EL
4	Difference of the packet height	Between individual packets of the same height	max 20mm
5	The packet parallelism in the upper position	The height difference of the packets at height up to 3,500mm	+/- 30mm
		The height difference of the packets at height over 3,500mm	+/- 40mm
6	Tolerance for lamellas	Permitted deviation for twisting and longitudinal bending – lamella width up to 1 m	max 3mm
		Permitted deviation for twisting and longitudinal bending – lamella width up to 2m	max 4mm
		Permitted deviation for twisting and longitudinal bending – lamella width up to 3m	max 5mm
		Permitted deviation for twisting and longitudinal bending – lamella width up to 4m	max 6mm
		Permitted deviation for twisting and longitudinal bending – lamella width up to 5m	max 7mm
		Permitted deviation for twisting and longitudinal bending – lamella width over 5m	max 10mm
		Permitted deviation for longitudinal bending – lamella width up to 1 m	max 2mm
		Permitted deviation for longitudinal bending – lamella width up to 2m	max 3mm
		Permitted deviation for longitudinal bending – lamella width up to 3m	max 4mm
		Permitted deviation for longitudinal bending – lamella width up to 4m	max 5mm
		Permitted deviation for longitudinal bending – lamella width up to 5m	max 6mm
		Permitted deviation for longitudinal bending – lamella width over 5m	max 10mm
7	Bottom slat flexion	In the upper position at width over 800mm	max 15mm
		In the upper position at width under 800mm	max 30mm
		In the lower position	+/- 15mm/m
8	Oblique operation of the lower slat	Deviation from the balance up to height 3500mm	+/- 10mm
		Deviation from the balance over height 3500mm	+/-15mm
9	Oblique run of packet	Ladder braiding between slats	permissible
10	Packet operation length	Permanent length of the motor operation	max 4min
11	Tex	During the operation, visible tex location on lamellas	permissible
12	Light permeability – as per EN 14501	In closed state, there is no horizontal view from outside inside.	permissible
		In closed state, there is no horizontal view from inside outside.	permissible
13	Acoustics	The operation and disconnection sounds result from technical solutions.	permissible
		Noise as per the wind force and lamella position.	permissible
14	Tolerance for front covers	For input values a, b, c, d	+/- 2 mm

Calculation of solar and light transmittance

The standard CSN EN 13363-1+A1 Solar protection devices combined with glazing - Calculation of solar and light transmittance defines a simplified method of calculation of a sun protection device combined with glazing based on thermal transmittance and total solar transmittance through glazing, and on light transmittance and reflectivity of a sun protection device for the evaluation of total solar transmittance.
The method is applicable to any type of sun protection devices in parallel with glazing, such as shutters or blinds. Sun protection devices can be installed inside a protected room, outside or in a gap between double glazing. The method is applicable in cases when total solar transmittance through glazing ranges between 0.15 and 0.85. It is anticipated that roller shutters have to be fastened to prevent direct solar radiation. It is presumed that in exterior sun protection devices and in-built sun protection installations the space between sun protection devices and the glazing is not ventilated, whilst it is ventilated in interior sun protection installations.

Basic concepts used
Transmittance - radiation that is transmitted through window into an interior; radiation transmittance factor τe achieves values between 0 and 100; i.e. 0 to 1.
Reflection (take-off) - shine that is returned to the external area by window, coefficient of returned shine ρ_e acquires the values from 0 to 100 % that is 0 to 1.
Absorption - radiation that is absorbed by window and increases its temperature; the radiation factor αe achieves values between 0 and 100; i.e. 0 to 1.
Emissivity - ability to radiate heat εe; it applies that ε = α
As result, the following equation applies: $\boldsymbol{\tau_e + \rho_e + \alpha_e}$ = **100 %**; or 1.

Value of factor g for the calculation is usually defined by the manufacturer of window panes or windows.
$\mathbf{g_{tot}}$ - total solar transmittance factor with solar protection.
$\mathbf{F_c}$ - reduction coefficient. The value of the coefficient ranges between 0 (theoretically best protection from solar radiation) and 1 (zero protection from solar radiation; in that case it applies that: $g = g_{tot}$).

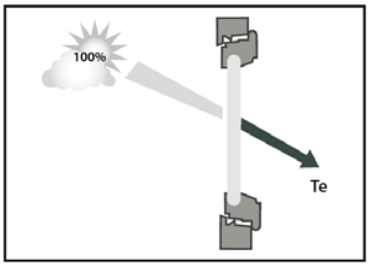

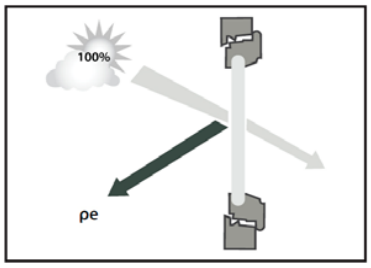

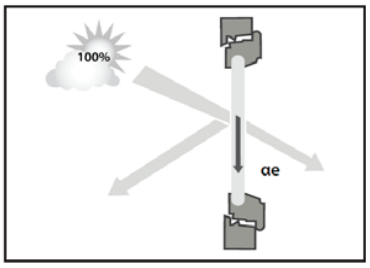

Type and specification of glazing:

Insulated transparent glazing (ČSN EN 14501)			
Thermal transmittance	$\mathbf{U_g}$	2,90	W/(m².K)
Overall solar transmittance	**g**	0,76	
Exterior shading G=(1/Ug+1/G1+1/G2)-1	$\mathbf{G_1}$	5,00	W/(m².K)
	$\mathbf{G_2}$	10,00	W/(m².K)
	G	1,55	W/(m².K)
Interior shading G=(1/Ug+1/G2)-1	$\mathbf{G_2}$	30,00	W/(m².K)
	G	2,64	W/(m².K)

Calculation $\mathbf{g_{tot}}$:
a) Exterior shading: $g_t = \tau_e * g + \alpha_e * G/G2 + \tau_e * (1-g) * G/G_2$
b) Interior shading: $g_t = g(1-g*\rho_e - \alpha_e * G/G_2)$

Example of calculation n.1:
Exterior blind Iostra, white aluminium colour (RAL 9006) + insulated transparent glazing
1. Measured values:

Transmittance	$\boldsymbol{\tau_e}$	0,00
Reflectance	$\boldsymbol{\rho_e}$	0,55
Absorption capacity	$\boldsymbol{\alpha_e}$	0,45

2. Values as per ČSN EN 13363-1+A1

Thermal transmittance through glass	U_g	2,90	W/(m².K)
Overall solar transmittance through glass	**g**	0,76	
	G_1	5,00	W/(m².K)
	G_2	10,00	W/(m².K)

3. Calculation

$G = (1/U_g+1/G_1+1/G_2)-1 = (1/2,9+1/5+1/10)-1 =$ **1,55**

$g_{tot} = \tau_e*g+\alpha_e*G/G_2+\tau_e*(1-g)*G/G_2$

$g_{tot} = 0*2,9+0,45*1,55/10+0*(1-0,76)*1,55/10 =$ **0,070**

$F_c = g_{tot}/g = 0,07/0,76 =$ **0,092**

Example of calculation n. 2:

Exterior blind Isotra, white aluminium colour (RAL 9006) + insulated transparent glazing, angle 45°

1. Calculation of transmittance, reflectance and absorptance:

Transmittance: $\tau_e = 0,65*\tau_e+0,15*\alpha_e = 0,65*0+0,15*0,45 =$ **0,07**

Reflectance: $\rho_e = \rho_e*(0,75+0,7*\tau_e) = 0,55*(0,75+0,7*0) =$ **0,41**

Absorption capacity: $\alpha_e = 1-\tau_e-\alpha_e = 1-0,07-0,41=$ **0,52**

2. Valoues as per ČSN EN 13363-1+A1

Thermal transmittance through glass	U_g	2,90	W/(m².K)
Overall solar transmittance through glass	**g**	0,76	
	G_1	5,00	W/(m².K)
	G_2	10,00	W/(m².K)

3. Calculation

$G = (1/U_g+1/G_1+1/G_2)-1 = (1/2,9+1/5+1/10)-1 =$ **1,55**

$g_{tot} = \tau_e*g+\alpha_e*G/G_2+\tau_e*(1-g)*G/G_2 =$ **0,137**

$F_c = g_{tot}/g = 0,137/0,76 =$ **0,18**

Solar and light transmittance according to CSN EN 13363-1+A1 for selected products of ISOTRA a.s.

Slat colour	Reflection (%)	Absorption (%)	gtot	Fc
RAL 7038	39	61	0,064	0,107
RAL 7048	34	66	0,069	0,114
RAL 9010	74	26	0,034	0,057
RAL 9016	76	24	0,032	0,054
RAL 9006	58	42	0,048	0,080
RAL 8014	8	92	0,091	0,152
RAL 7016	17	83	0,083	0,139
RAL 9007	39	61	0,064	0,107
RAL 1015	66	34	0,041	0,068
RAL 7039	17,9	82,1	0,082	0,14
RAL 1019	36,1	63,9	0,067	0,113
RAL 8019	15,1	84,9	0,085	0,144
YW359F	14,5	85,5	0,085	0,145
W210	31	69	0,071	0,119
DB 703	23	77	0,078	0,130
DB 702	29	71	0,073	0,122
VSR 780	22	78	0,079	0,132
RAL 3004	35	65	0,068	0,113
RAL 7022	18	82	0,083	0,138
RAL 7035	51	49	0,054	0,090
RAL 9005	5	95	0,094	0,156

*valid for glazing with parameters g = 0,59, Ug = 1,2 W/m2K

Wound Up Height

Wound Up Venetian Blind Height Including Head Rail and Bottom Rail without Blind holder



Gap between the lower edge of the channel and the first slat when closed.

Cetta 60 Flexi	32 - 92 mm
Cetta 65	32 - 92 mm
Cetta 80	35 - 103 mm
Cetta 80 Flexi	38 - 106 mm
Cetta 100 Flexi	45 - 130 mm
Zetta 70	44 - 104 mm
Zetta 90	62 - 142 mm
Setta 65	44 - 104 mm
Setta 90	66 - 152 mm
Titan 90	60 - 150 mm

The values fall within the manufacturing tolerance of the blind height.

For the corner blind CORNER, the packet height is the same as in the standard blind depending on the slat type used.

The roll height of the Cetta 80F TE sloped telescopic blind is calculated in the order form – EXCEL.

SLAT TYPE – STANDARD AND PERPENDICULAR BOTTOM RAIL

SLAT Z90

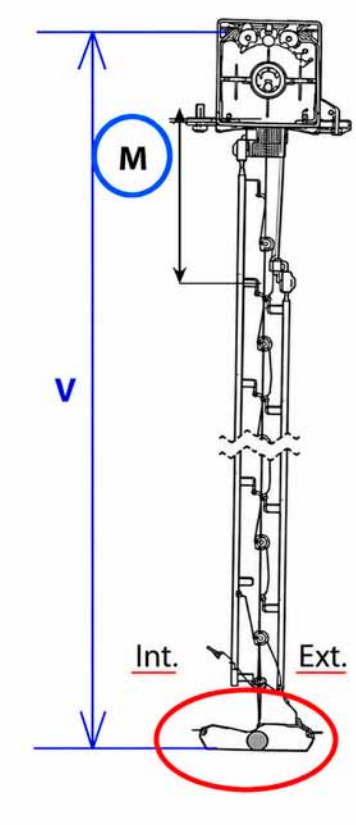

M - CONSTANT

SLAT Z90 PERPENDICULAR BOTTOM RAIL

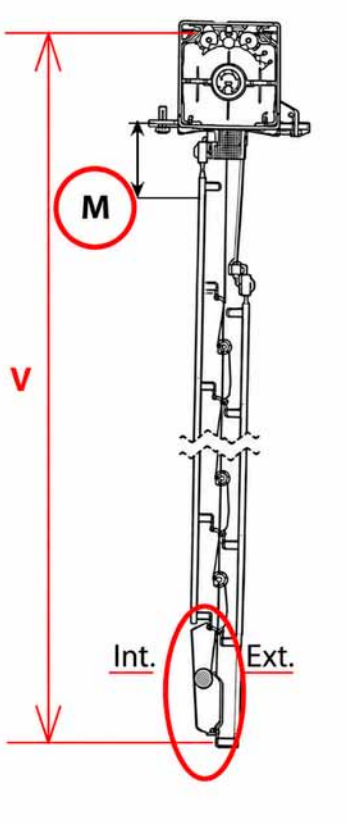

M - VARIABLE

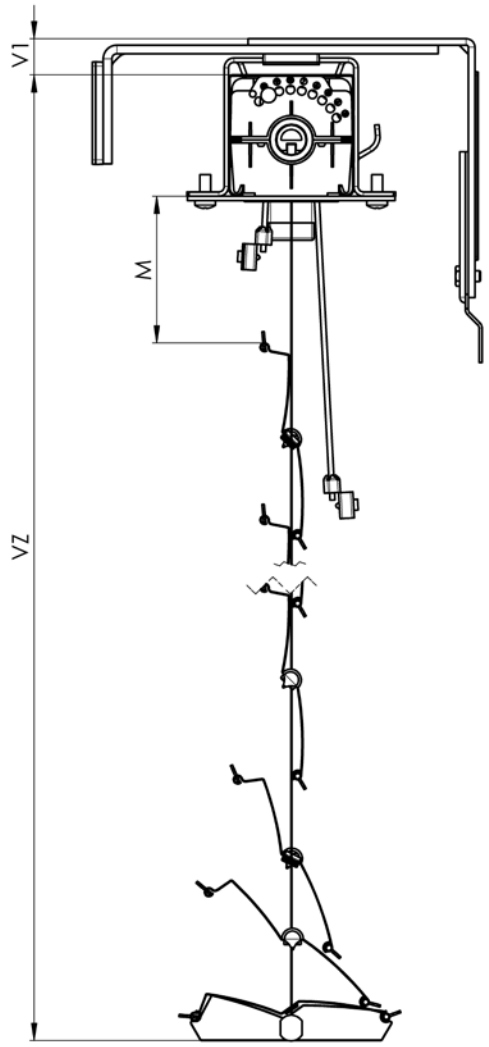

Z90 – STANDARD 2-00158-XXXX

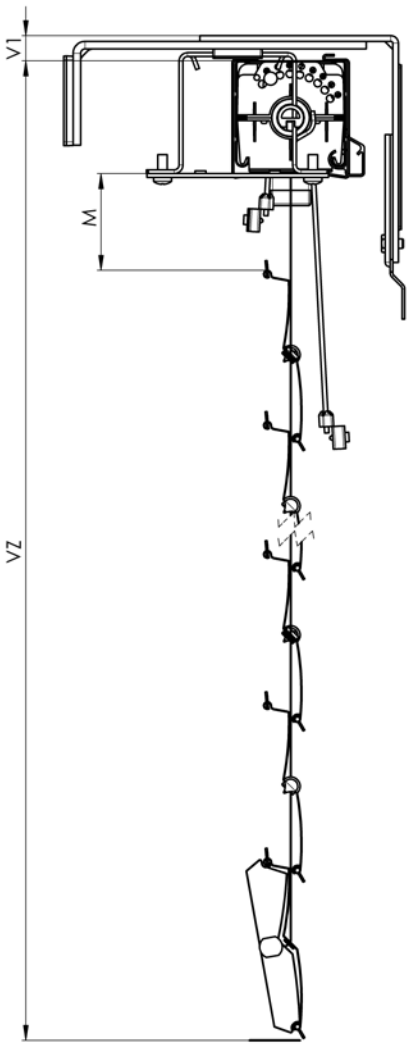

Z90 – PERPENDICULAR BOTTOM RAIL 2-00158-XXXX

Blind Type Control - Handle	Coiling Height Based on Blind Height (mm)													
	500	600	700	800	900	1000	1100	1200	1300	1400	1500	1600	1700	1800
Cetta 50 - wire	90	95	95	100	105	105	110	115	115	120	125	125	130	130
Cetta 65	125	135	145	150	160	170	175	185	195	200	210	220	220	230
Cetta 65 Slim	110	120	125	130	135	145	150	155	165	165	175	180	185	190
Cetta 60 Flexi	105	105	110	115	115	120	125	125	130	130	135	140	145	145
Cetta 80 Flexi	100	105	105	110	110	115	115	120	120	125	125	125	130	130
Cetta 100 Flexi	100	100	105	105	105	110	110	110	115	115	120	120	120	125
Cetta 80	125	130	140	145	150	160	165	175	180	190	195	205	210	220
Cetta 80 Slim	110	115	120	125	130	135	140	150	150	160	165	170	175	180
Setta 65	115	125	130	140	150	150	160	170	175	185	195	200	205	215
Setta 90	105	110	115	120	125	135	135	140	145	150	155	165	170	175
Zetta 70	120	125	130	140	145	150	160	170	170	180	190	195	200	210
Zetta 90	110	115	125	130	135	135	145	150	155	160	170	175	180	180
Titan (Motor control)	150	158	165	180	188	195	203	218	225	233	240	255	263	270

Blind Type Control - Handle	Coiling Height Based on Blind Height (mm)													
	1900	2000	2100	2200	2300	2400	2500	2600	2700	2800	2900	3000	3100	3200
Cetta 50 - wire	135	140	145	150	155	155	160	170	180	185	190	200	200	205
Cetta 65	240	245	255	265	270	280	290	295	305	315	320	330	340	340
Cetta 65 Slim	200	205	210	220	220	230	235	240	250	255	260	265	275	275
Cetta 60 Flexi	150	155	155	160	165	165	170	175	175	180	180	185	190	195
Cetta 80 Flexi	135	135	140	145	145	150	150	155	155	160	160	165	165	170
Cetta 100 Flexi	125	130	130	130	135	135	140	140	145	145	145	150	150	155
Cetta 80	220	230	235	245	250	260	265	270	280	285	295	300	310	315
Cetta 80 Slim	185	190	195	205	205	215	220	220	230	235	240	245	250	255
Setta 65	220	230	240	245	255	265	265	275	285	290	300	310	315	320
Setta 90	180	180	185	195	200	205	210	215	220	225	230	235	240	245
Zetta 70	215	225	230	235	245	250	255	265	275	275	285	295	300	305
Zetta 90	190	195	200	205	215	220	225	225	235	240	245	250	260	265
Titan (Motor control)	278	293	300	308	315	330	338	345	353	368	375	383	390	405

Blind Type Control - Handle	Coiling Height Based on Blind Height (mm)													
	3300	3400	3500	3600	3700	3800	3900	4000	4100	4200	4300	4400	4500	4600
Cetta 50 - wire	210	215	220	220	225	230	235	240	-	-	-	-	-	-
Cetta 65	350	360	365	375	385	390	400	410	415	425	435	440	450	460
Cetta 65 Slim	285	290	295	305	310	315	320	330	335	340	350	350	360	365
Cetta 60 Flexi	195	200	205	205	210	215	215	220	220	225	230	235	235	240
Cetta 80 Flexi	170	170	175	175	180	180	185	190	190	195	195	200	200	205
Cetta 100 Flexi	155	155	160	160	165	165	165	170	170	175	175	175	180	180
Cetta 80	325	330	340	340	350	355	365	370	380	385	390	400	405	415
Cetta 80 Slim	265	265	275	275	285	290	295	300	305	310	315	320	325	335
Setta 65	330	335	345	355	360	370	380	380	390	400	405	415	425	430
Setta 90	250	260	265	270	270	275	280	285	295	300	305	310	315	315
Zetta 70	315	320	330	335	340	350	355	360	370	380	380	390	400	405
Zetta 90	270	270	280	285	290	295	305	310	315	315	325	330	335	340
Titan (Motor control)	413	420	428	443	450	458	465	480	-	-	-	-	-	-

Blind Type Control - Handle	Coiling Height Based on Blind Height (mm)													
	4700	**4800**	**4900**	**5000**	**5100**	**5200**	**5300**	**5400**	**5500**	**5600**	**5700**	**5800**	**5900**	**6000**
Cetta 50 - wire	-	-	-	-	-	-	-	-	-	-	-	-	-	-
Cetta 65	460	470	480	485	495	505	510	520	530	535	545	555	560	570
Cetta 65 Slim	370	375	385	390	395	405	405	415	420	425	435	440	445	450
Cetta 60 Flexi	245	245	250	255	255	260	260	265	270	270	275	280	285	285
Cetta 80 Flexi	205	210	210	215	215	220	220	220	225	225	230	235	235	240
Cetta 100 Flexi	185	185	190	190	190	195	195	200	200	200	205	205	210	210
Cetta 80	420	430	435	445	450	460	460	470	475	485	490	500	505	510
Cetta 80 Slim	335	345	350	355	360	365	370	375	380	390	390	400	405	405
Setta 65	435	445	450	460	470	475	485	495	495	505	515	520	530	540
Setta 90	325	330	335	340	345	350	360	360	365	370	375	380	390	395
Zetta 70	410	420	425	435	440	445	455	460	465	475	485	485	495	505
Zetta 90	350	355	360	360	370	375	380	385	395	400	405	405	415	420
Titan (Motor control)	-	-	-	-	-	-	-	-	-	-	-	-	-	-

Due to the unpredictable folding of the ladder between the slats of the C 80 and C65 blinds, we do not guarantee the exact height of the roll.
For motorized blinds, the height of the roll changes by + 20 mm (for Cetta 50 with channel 40x40 by +40 mm).
For Cetta 50 with channel 56x58 the height of the roll changes by +20 mm.
For all types of blinds, the height of the front cover (FC) should be increased by the height of the blind brackets (H1) and the thickness of the FC compared to the blind roll. We recommend 20mm unless more is required for anchorage reasons.
Notice: *Max. guaranteed height of the Cetta 50 blind with channel 40x40: 3000 mm.*
Products in this assortment group are always measured from the interior.

Abbreviations
SZ - width of the blind
VZ - height of the blind
DL - length of the lamella
VL - length of the guiding bar
V1 - height by the holder type
VL = VZ – 65 mm
DVL – guide axis (blind axis)
VP – packet height

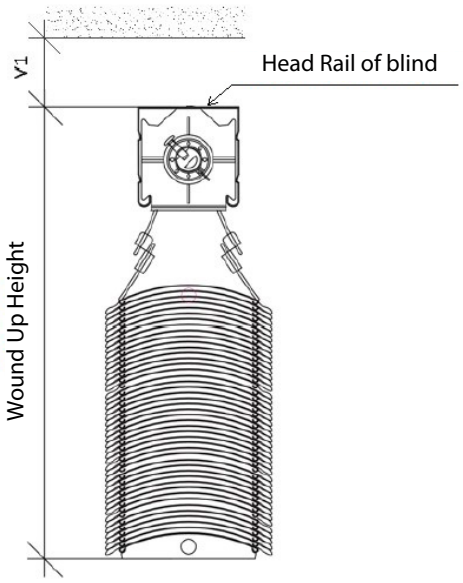

Color coordination - guides nad locks	
Ladder - grey	
Guides and locks 1015	
1013	280 oyster white 1013 (.)
1015	090 light ivory 1015 (.)
Guides and locks 8014	
1019	260 grey beige (1019)
8014	180 brown 8014 (.)
8019	250 grey brown 8019 (.)
W210	220 golden oak structure W210 (x)
Guides and locks 9004	
3004	110 purple red 3004 (x)
5002	120 ultramarine blue 5002 (x)
5014	130 pigeon blue 5014 (.)
6005	green 6005 (x)
7012	290 basalt grey 7012 (.)
7016	020 anthracite grey 7016 (.)
7016S	021 anthracite grey structure 7016 (.)
7016MT	300 anthracite grey 7016 MECO TOUCH (.)
7021	230 black grey 7021
7022	080 umbra grey 7022 (.)
9005	black 9005 (.)
DB703	070 grey (dark pearl) DB 703 (.)
VSR780	050 bronze VSR 780 (.)
YW359F	240 black metallic YW359F
X	other (price and delivery date will be specified)
Guides and locks 9006	
7035	150 light grey 7035 (.)
7038	160 agate grey7038 (.)
7039	270 quartz grey (7039)
7048	170 pearl mouse grey 7048 (.)
9002	190 grey white 9002 (x)
9006	010 silver 9006 (.)
9006S	011silver structure 9006 (.)
9006MT	310 silver 9006 MECO TOUCH (.)
9007	030 grey aluminium 9007 (.)
DB702	060 grey (silver pearl) DB 702 (x)
Guides and locks 9010	
9003	signal white 9003
9010	210 white 9010 (.)
9016	040 traffic white 9016 (.)

Color coordination - guides nad locks	
Ladder - black	
Guides and locks 9004	
1013	280 oyster white 1013 (.)
1015	090 light ivory 1015 (.)
1019	260 grey beige (1019)
3004	110 purple red 3004 (x)
5002	120 ultramarine blue 5002 (x)
5014	130 pigeon blue 5014 (.)
6005	green 6005 (x)
7012	290 basalt grey 7012 (.)
7016	020 anthracite grey 7016 (.)
7016S	021 anthracite grey structure 7016 (.)
7016MT	300 anthracite grey 7016 MECO TOUCH (.)
7021	230 black grey 7021
7022	080 umbra grey 7022 (.)
7035	150 light grey 7035 (.)
7038	160 agate grey7038 (.)
7039	270 quartz grey (7039)
7048	170 pearl mouse grey 7048 (.)
8014	180 brown 8014 (.)
8019	250 grey brown 8019 (.)
9002	190 grey white 9002 (x)
9003	signal white 9003
9005	black 9005 (.)
9006	010 silver 9006 (.)
9006S	011silver structure 9006 (.)
9006MT	310 silver 9006 MECO TOUCH (.)
9007	030 grey aluminium 9007 (.)
9010	210 white 9010 (.)
9016	040 traffic white 9016 (.)
DB702	060 grey (silver pearl) DB 702 (x)
DB703	070 grey (dark pearl) DB 703 (.)
VSR780	050 bronze VSR 780 (.)
YW359F	240 black metallic YW359F
X	other (price and delivery date will be specified)
W210	220 golden oak structure W210 (x)

Color coordination - caps	
Cap in colour 1015	
1013	RAL oyster white 1013
1015	RAL light ivory 1015
1019	RAL grey beige 1019
ISD600	Isotra system DECORAL structure ISD600
ISD610	Isotra system DECORAL structure ISD610
ISD630	Isotra syste DECORAL structure ISD630
Cap in colour 7016	
7012	RAL basalt grey 7012
7016	RAL anthracite grey 7016
7016M	RAL anthracite grey matt 7016
7016S	RAL anthracie grey structure 7016
7016MT	RAL grey 7016 for slat MECO TOUCH
7021	RAL black grey 7021
7022	RAL umbra grey 7022
7024	RAL graphite grey 7024
ISD640	Isotra system DECORAL structure ISD640
ISD700	Isotra system DECORAL distinctive ISD700
Cap in colour 7040	
7015	RAL slate grey 7015
7035	RAL light grey 7035
7038	RAL agate grey 7038
7039	RAL quartz grey 7039
7040	RAL window grey 7040
7044	RAL silk grey 7044
7048	RAL pearl mouse grey 7048
9006	RAL silver 9006
9006M	RAL silver matt 9006
9006S	RAL silver structure 9006
9006MT	RAL silver 9006 for slat MECO TOUCH
9007	RAL grey aluminium 9007
9007M	RAL grey aluminium matt 9007
9007S	RAL grey aluminium structure 9007
E	ELOX
ISD160	Isotra system DECORAL smooth ISD160
ISD620	Isotra system DECORAL structure ISD620
Cap in colour 8003	
ISD110	Isotra system DECORAL smooth ISD110
ISD120	Isotra system DECORAL smooth ISD120
ISD130	Isotra system DECORAL smooth ISD130
ISD140	Isotra system DECORAL smooth ISD140
ISD150	Isotra system DECORAL smooth ISD150
ISD200	Isotra system DECORAL structure ISD200
ISD210	Isotra system DECORAL structure ISD 210
ISD500	Isotra system DECORAL smooth ISD500
ISD510	Isotra system DECORAL smooth ISD510

Cap in colour 8014	
8012	RAL Red brown 8012
8014	RAL sepia brown 8014
8014M	RAL sepia brown matt 8014
8014S	RAL sepia brown structure 8014
8019	RAL grey brown 8019
ISD152	Isotra system DECORAL smooth ISD152
ISD154	Isotra system DECORAL smooth ISD154
ISD212	Isotra system DECORAL smooth ISD212
ISD214	Isotra system DECORAL structure ISD214
ISD220	Isotra system DECORAL structure ISD220
ISD222	Isotra system DECORAL structure ISD222
ISD230	Isotra system DECORAL structure ISD230
Xisd	other ISD (after consultation with SR)
Cap in colour 9003	
9003	RAL signal white 9003
9010	RAL white 9010
9010M	RAL white matt 9010
9010S	RAL white structure 9010
9016	RAL traffic white 9016
9016M	RAL traffic white matt 9016
9016S	RAL traffic white structure 9016
Cap in colour 9004	
3004	RAL red (for slat 3004)
3005	RAL wine red 3005
6009	RAL fir green 6009
9004	RAL signal black 9004
9005	RAL jet black 9005
9005M	RAL jet black matt 9005
9005S	RAL jet black structure 9005
DB702	RAL grey (for slat DB702)
DB703	RAL grey (dark pearl) DB 703
VSR780	RAL VSR780
ISD310	Isotra system DECORAL gloss ISD310
YW359F	RAL black metallic (k lamele YW359F)
X	other (RAL note)

Cetta 50

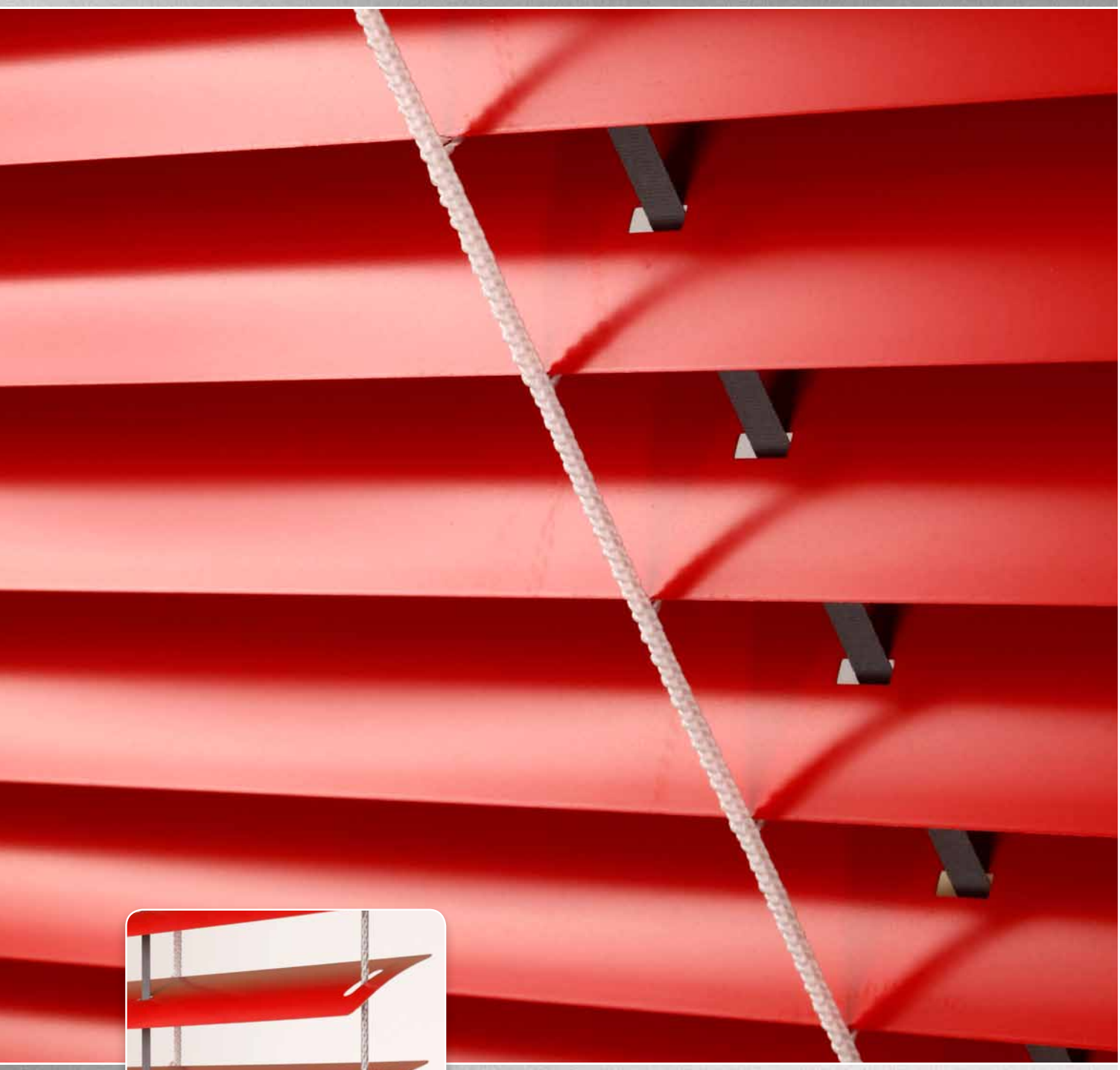



SLAT SHAPE

- Suitable for shading small areas
- Optional assembly in interior
- Electrical control option

ISOTRA Quality

Cetta 50

Basic Product Specification

Control
Used for pulling the blind up and down and setting the slat

Cord - a plastic cord bushing is installed on the window frame from the interior, which protects the cord against abrasion. The head rail is shortened by 20 mm against the required length from the control side in order to facilitate the cord gearing installation (color: black-white).

Handle - The control wand mechanism is protracted to the interior at the angle of 45° and 90° using a bushing and a hexagonal wand (color design: white / anodized).

Motor - Optional control using the sun / wind sensor or by a remote control or switch. One motor can control even more Venetian blinds simultaneously based on blind dimensions. The motor is then installed on one Venetian blind of the group.

Specification Cetta 50

	Head Rail			Bottom Rail	Slat	Side Guidance	Ladder	Textile Band	Assembly
	Cord/Handle	Motor	Motor			Steel Wire			
Commercial Name **Dimension (mm)** **Material**	P 528 40 x 40 F440	P 001 56 x 58 Fe	P 001/2 58 x 60 Al	P 508 49 x 12 Fe	P 529 0,23 x 50 Al	P 501 ø 2,2 Fe/PVC	P 509 42 x 54 PES	P 531 6 x 0,28 PES	See chapter "Assembly"
Color	Standard: RAL 9003 White RAL 9006 Silver galvanized (Fe profil); natural (Al profil) Other RAL colors sprayed, DECORAL Galvanized steel plate or anodized aluminum for motor alternative.				~~According to~~ current ISOTRA a.s. scheme	grey black	grey white	grey	

We do not make atypical designs.

Standard Dimensions

Width (mm)		Height (mm)		Guaranteed Area (m^2)
min.	max	min.	max	max.
400	3500	500	3000	6 (Cord control)
400	3500	500	3000	8 (Handle control)
600	3500	500	3000	10 (Motor control)

Cetta 50 - cord

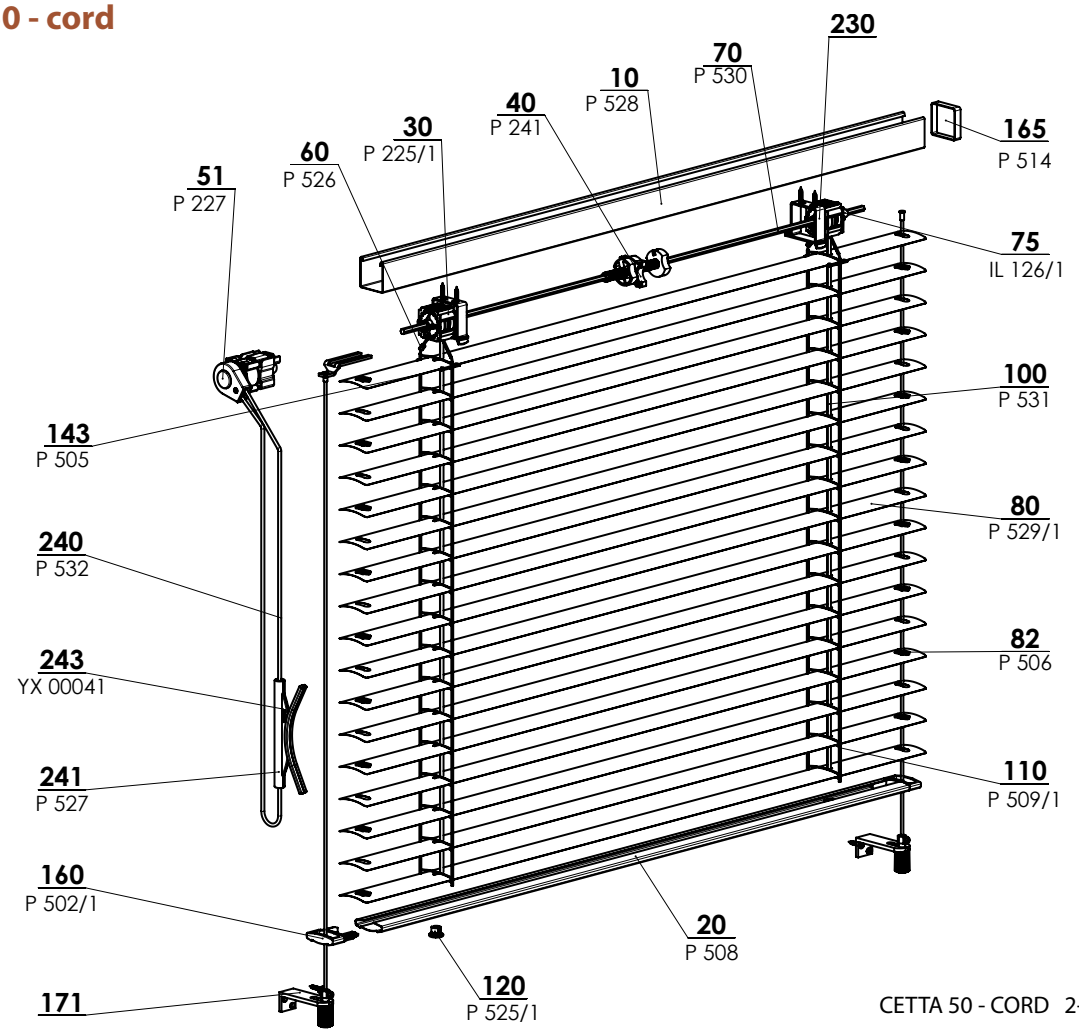

CETTA 50 - CORD 2-00152-XXXX-G

Cetta 50 - cord (2-00152-5001)

Position	Item name	Business name - Abbreviation 2	Order number - Abbreviation 1
10	Head rail 40x40	P 528	6-001277-xxxx
20	Bottom rail - 50 mm	P 508	6-001230-xxxx
30	Bearing C50 - without ball cord	P 225/1	2-00365-0000
40	End stop 40x40	P 241	2-00049-0000
51	Gearing 40x40 - plastic - cord	P 227	2-00133-XXXX
60	Ladder connector	P 526	6-001275-0000
70	Tilt rod - hexagonal 6 mm	P 530	6-001278-0000
75	Hexagonal metal ring	P 529/1	6-010981-0000
80	**Al slat**		**See Slats**
80	End guidance "C" L+R	P 033/41	3-03967-XXXX
80	End guidance "C" L+R (metal)	P 033/51	3-03964-PU19
82	Pad for slat and wire	P 506	3-00170-0000
100	Texband	P 531	6-001284-xxxx
110	Ladder C50	P 509/1	6-010452-xxxx
120	Bottom rail plug	P 525/1	6-001273-0001
143	Fixed bracket for slat 50 mm	P 505	6-001226-0000
160	Bottom rail cover C50	P 502/1	6-004280-XXXX
165	Side head rail cover	P 514	6-001245-0000
171	**Guidance - wire + holder**		**See Guidance**
230	**Blind holders**		**See Blind Holders**
240	Cord grey	P 532	6-001258-xxxx
241	Cord holder	P 527	6-001276-9010
242	Bushing cord - white	P 515	6-001248-0000
243	Cord holder	XY 00041	3-02427-0000
242	Bushing cord - white	P 515	6-001248-0000
243	Cord holder	XY 00041	3-02427-0000

Bushing cord (6-001248-0000)



Cetta 50 - handle

Control - handle, channel 40x40

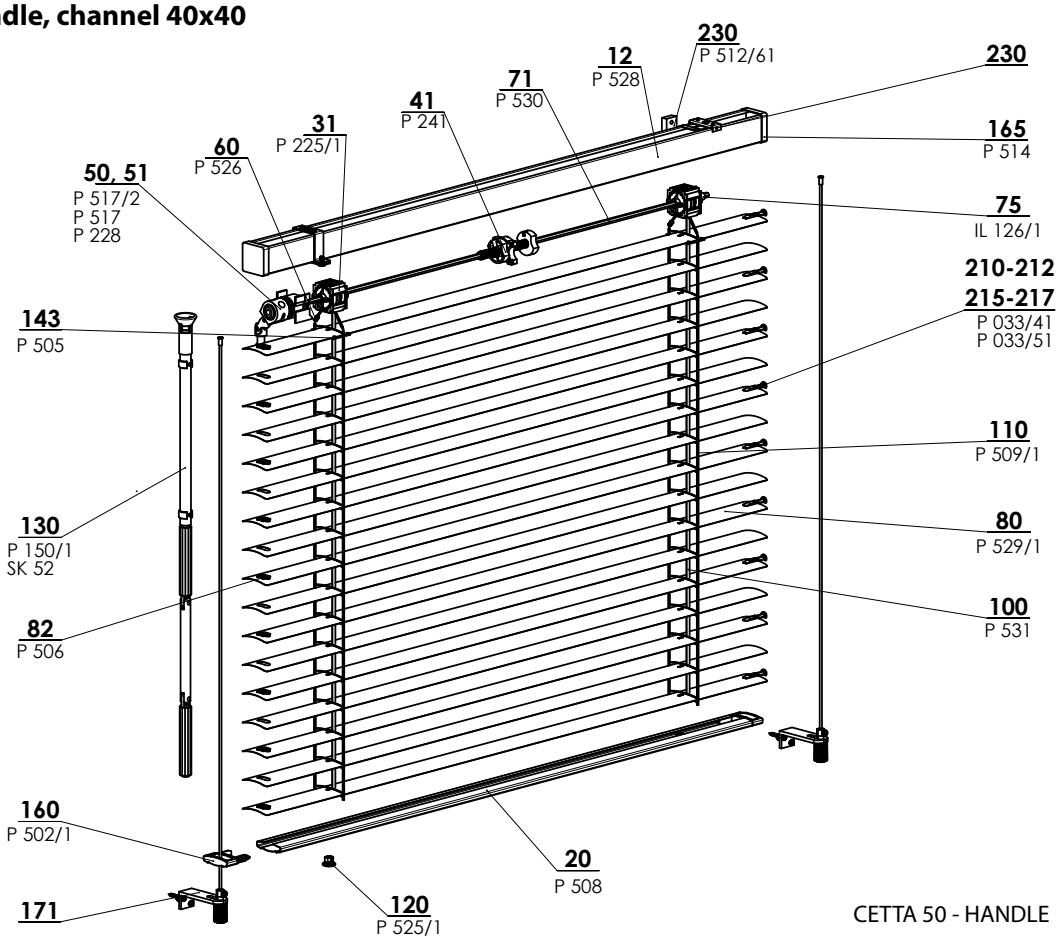

CETTA 50 - HANDLE 2-00151-XXXX-H

Control - handle, channel 56x58

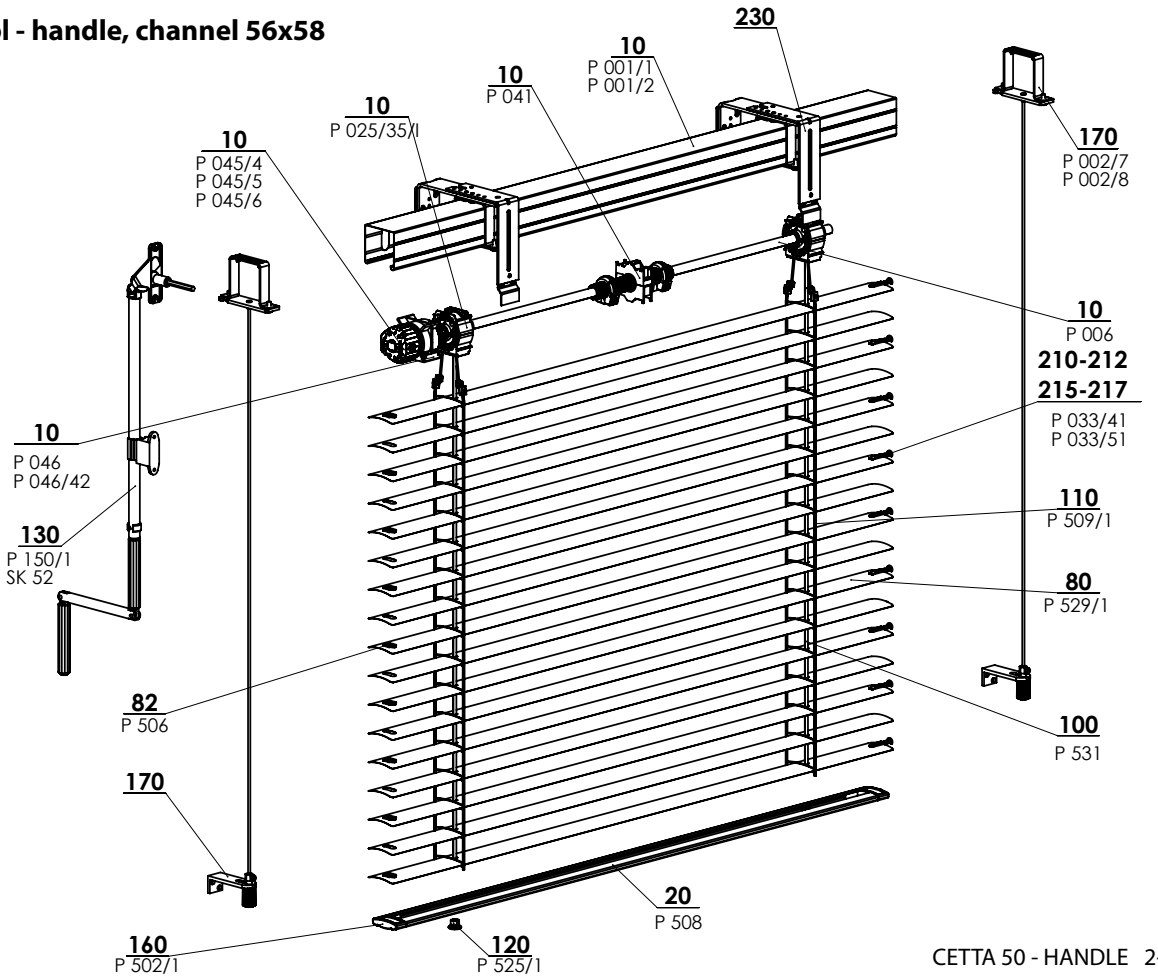

CETTA 50 - HANDLE 2-00151-XXXX-H

Cetta 50 - handle (2-00151-5001)

Position	Item name	Business name - Abbreviation 2	Order number - Abbreviation 1
10	Head rail, Fe 56x58	P 001/1	3-00166-PU22
10	Head rail, Al 58x60	P 001/2	7-301180-0000
10	End stop 56x58	P 041	2-00048-9004
10	Bearing C35/C50 - new	P 025/35/I	2-01864-9004
10	Gearing plastic 4 mm hexagonal, STS-extended	P 045/4	6-008115-0000
10	Gearing plastic 8 mm hexagonal 14 mm exit, 46 mm	P 045/5	6-013232-0000
10	Gearing plastic 6 mm hexagonal 14 mm exit, 46 mm	P 045/6	6-013233-0000
10	Gearing holder	P 046	6-001181-0000
10	Gearing holder 111 510 Stoma, inbus	P 046/42	6-014239-0000
10	Shaft	P 006	7-300198-0000
12	Head rail 40x40	P 528	6-001277-xxxx
20	Bottom rail - 50 mm	P 508	6-001230-xxxx
31	Bearing C50 - without ball cord	P 225/1	2-00365-0000
41	End stop 40x40	P 241	2-00049-0000
50	Hexagonal gearing	P 517	6-001250-0000
50	Hexagonal gearing - interior	P 517/2	6-001250-0002
51	Gearing 40x40 - plastic	P 228	2-00132-0000
60	Ladder connector	P 526	6-001275-0000
71	Tilt rod - hexagonal 6 mm	P 530	6-001278-0000
75	Hexagonal metal ring	IL 126/1	6-010981-0000
80	**Al slat**		**See Slats**
82	Pad for slat and wire	P 506	3-00170-0000
100	Texband 6x0,28 mm	P 531	6-001284-xxxx
110	Ladder C50	P 509/1	6-010452-xxxx
120	Bottom rail plug	P 525/1	6-001273-0001
130	**Handle**		**See Controls**
143	Fixed bracket for slat 50 mm*	P 505	6-001226-0000
160	Bottom rail cover C50	P 502/1	6-004280-xxxx
165	Side head rail cover	P 514	6-001245-0000
170, 171	**Guidance - wire + holder**		**See Guidance**
210, 215	End guidance "C" L+R	P 033/41	3-03967-XXXX
211, 216	End guidance "C" L+R (metal)	P 033/51	3-03964-PU19
230	**Blind holder**		**See Blind Holders**

* only for Head rail 40x40

Cetta 50 - motor

Control - motor, channel 56x58

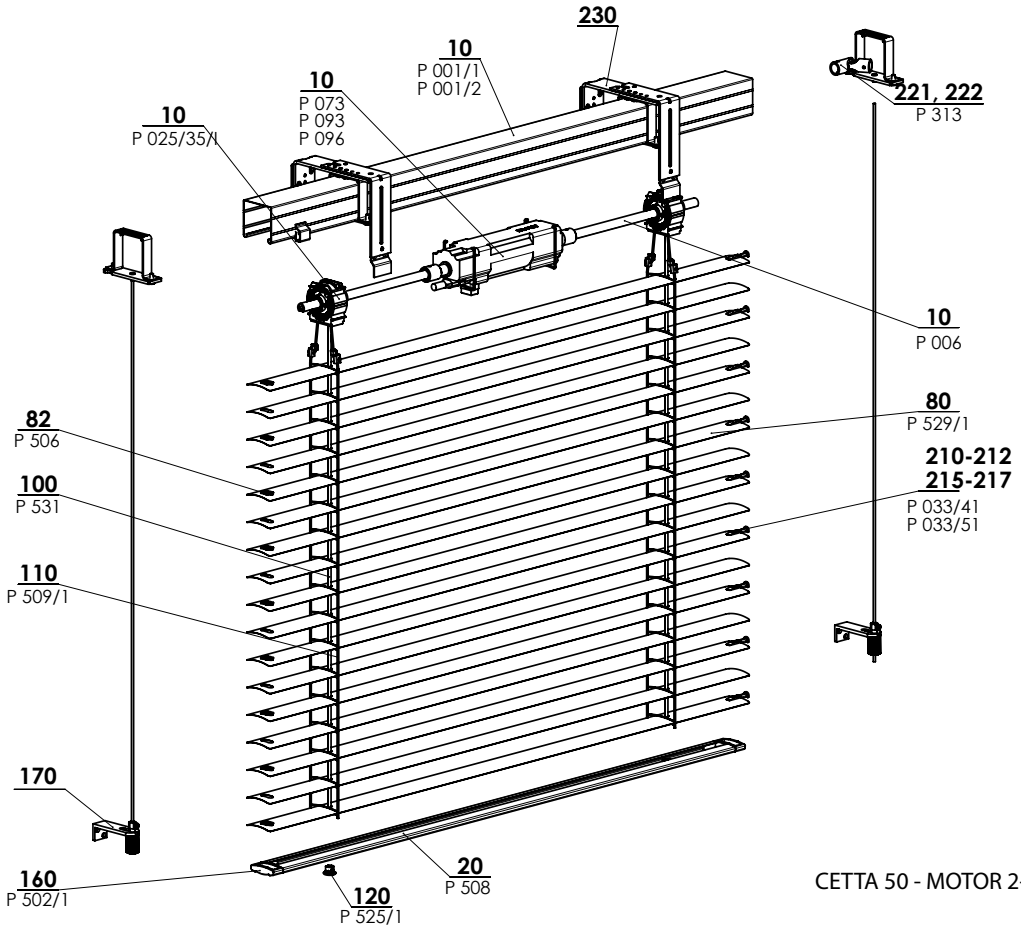

CETTA 50 - MOTOR 2-00301-XXXX-J

Cetta 50 - motor (2-00301-5001)

Position	Item name	Business name - Abbreviation 2	Order number - Abbreviation 1
10	Head rail, Fe 56x58	P 001/1	3-00166-PU22
10	Head rail, Al 58x60	P 001/2	7-301180-0000
10	Bearing C35/C50 - new	P 025/35/I	2-01864-9004
10	Motors (SOMFY) EX. BLINDS	P 073	2-00512-0000
10	Motors (GEIGER) EX. BLINDS	P 093	2-00572-0000
10	Motors (ELERO) EX. BLINDS	P 096	2-00648-0000
10	Shaft	P 006	7-300198-0000
20	Bottom rail - 50 mm	P 508	6-001230-xxxx
31	Bearing C35/C50	P 025/35	2-01100-9004
50	**Motor**		**See Controls**
80	**Al slat**		**See Slats**
82	Pad for slat and wire	P 506	3-00170-0000
100	Texband 6x0,28 mm	P 531	6-001284-xxxx
110	Ladder C50	P 509/1	6-010452-xxxx
120	Bottom rail plug	P 525/1	6-001273-0001
160	Bottom rail cover C50	P 502/1	6-004280-xxxx
170, 171	**Guidance - wire + holder**		**See Guidance**
210, 215	End guidance "C" L+R	P 033/41	3-03967-XXXX
211, 216	End guidance "C" L+R (metal)	P 033/51	3-03964-PU19
220	Rod connector	P 077/3	6-017032-0000
221	Rod connector	P 313	6-003075-0000
222	Rod connector	P 313	6-003075-0000
230	**Blind holder**		**See Blind Holders**

CETTA 50 EXTERIOR BLIND DIAGRAM

HORIZONTAL SECTION HANDLE CONTROL

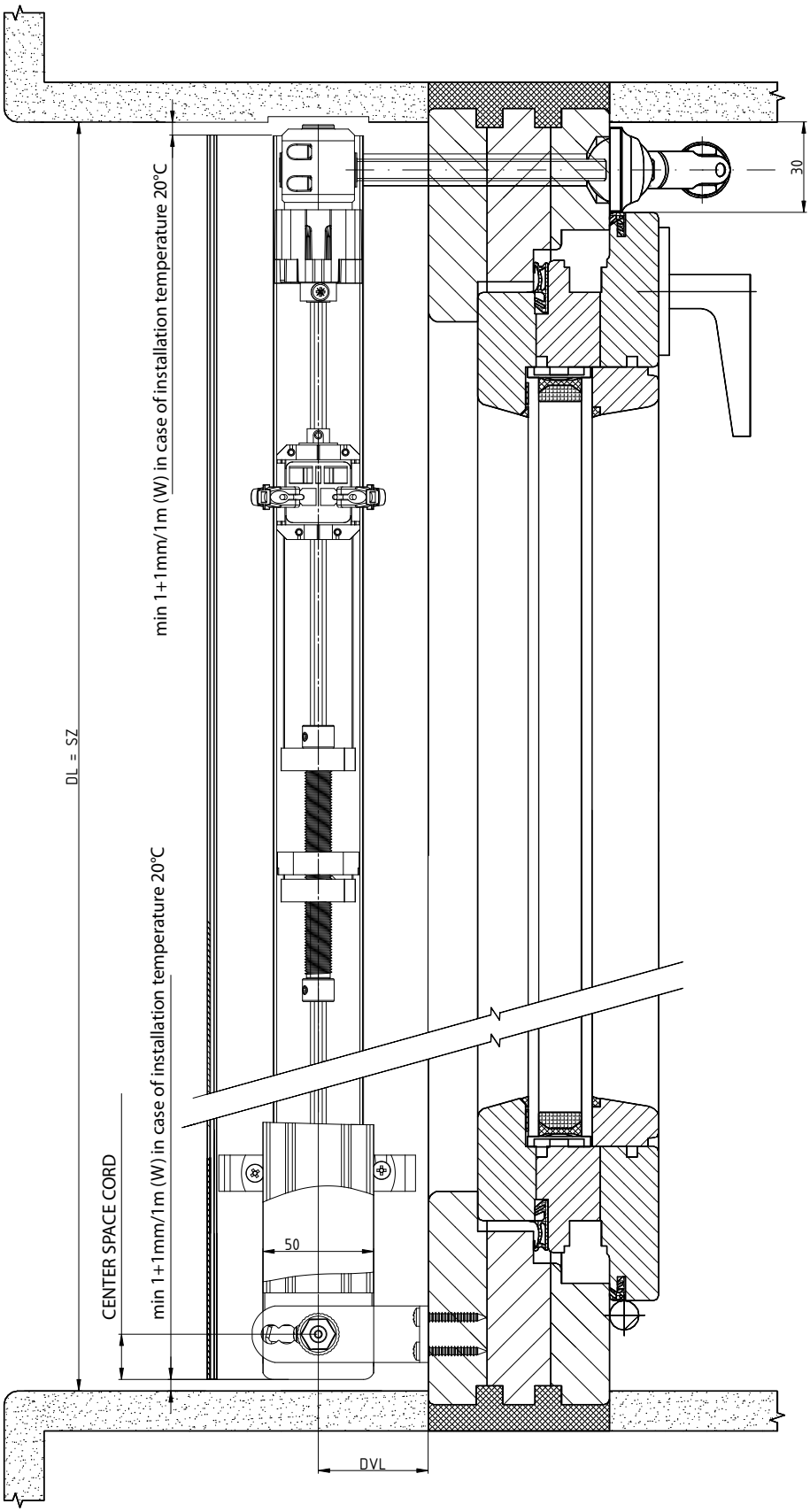

2-01825-0077-0

CETTA 50 EXTERIOR BLIND DIAGRAM

VERTICAL SECTION HANDLE CONTROL

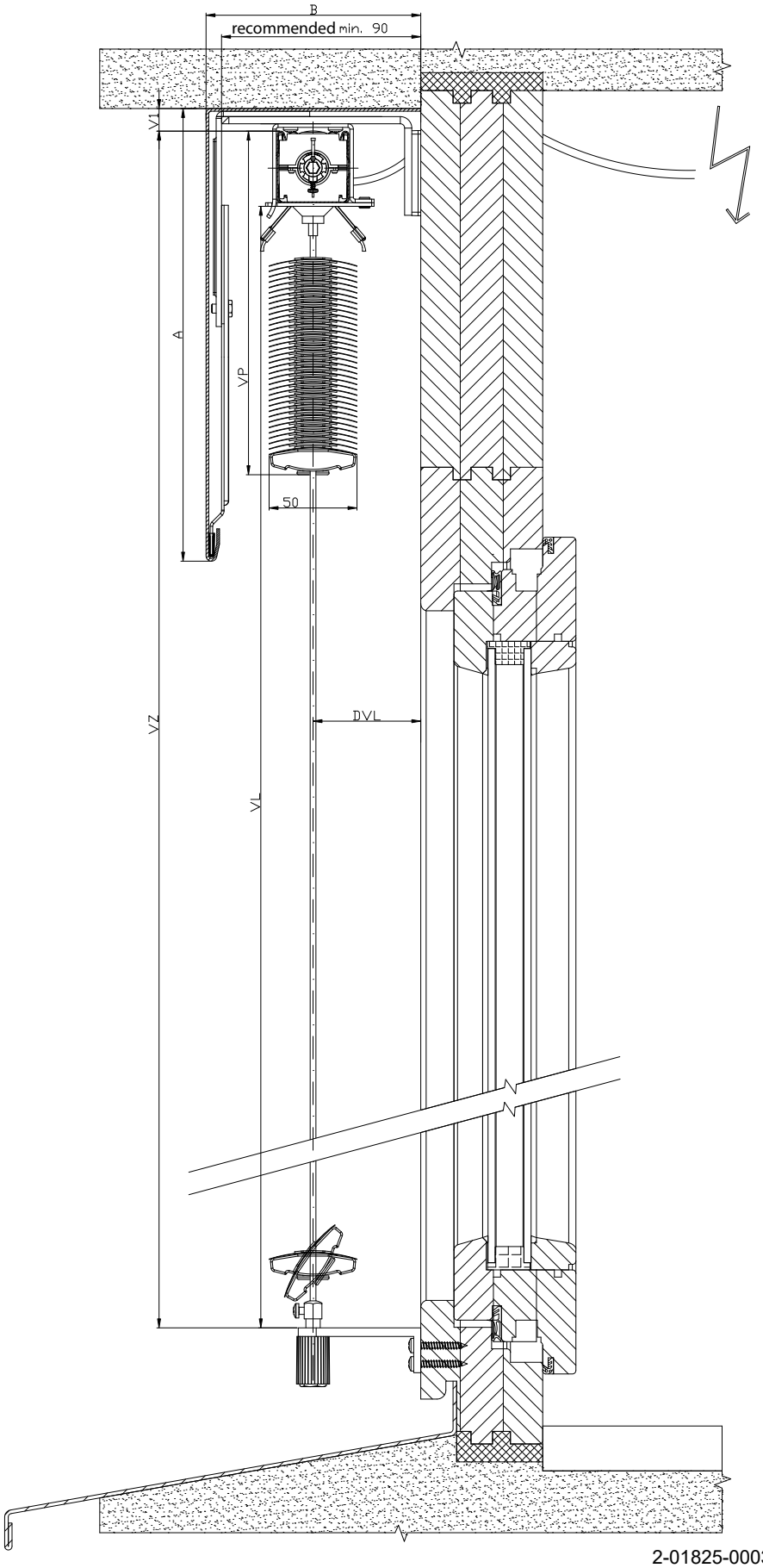

2-01825-0003-0

CETTA 50 EXTERIOR BLIND DIAGRAM

VERTICAL SECTION ENDLESS CORD

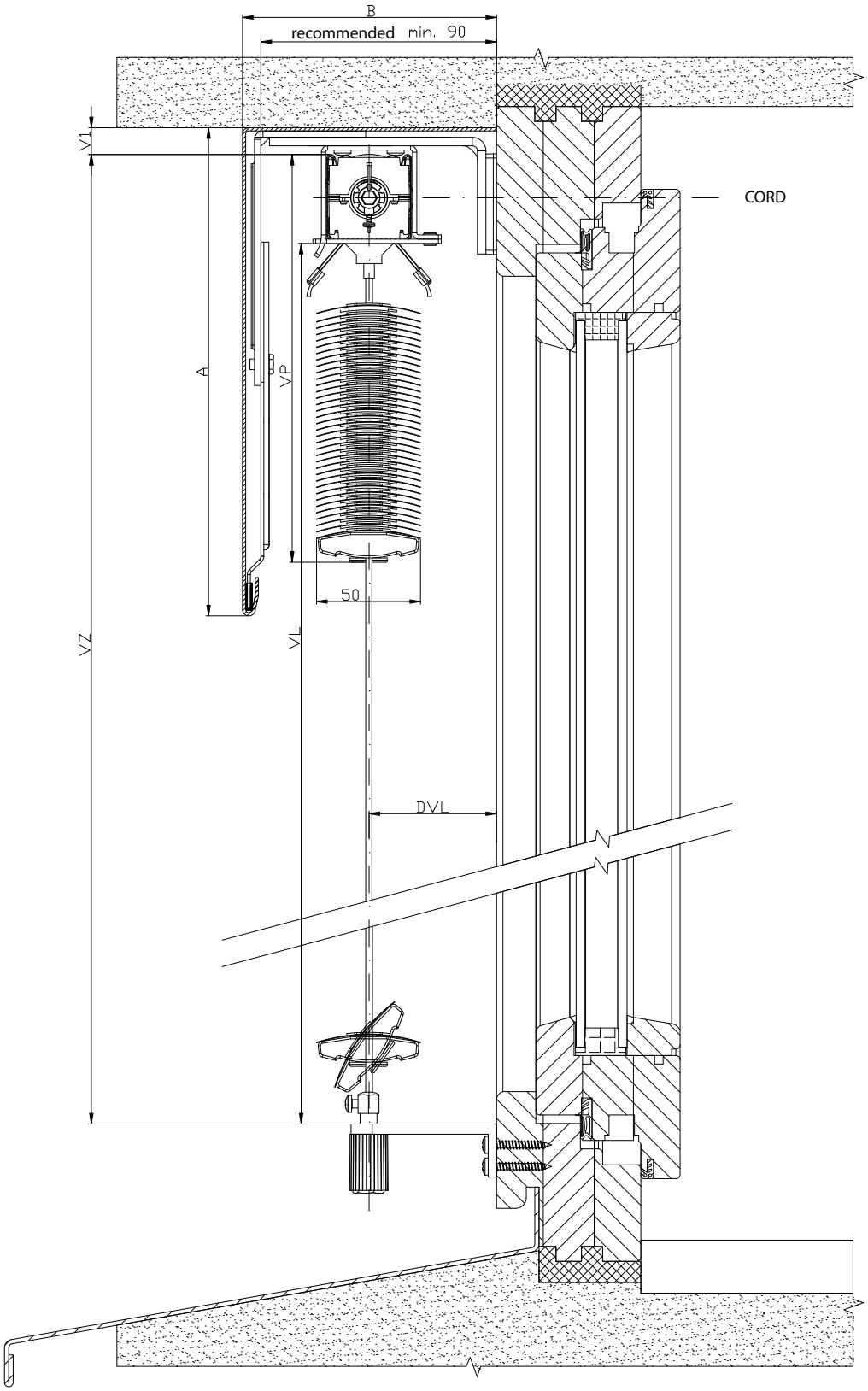

2-01825-0002-0

Cetta 65,80,80 Slim, 60/80/100 Flexi



SLAT SHAPE

- Bottom rail made of extruded aluminum
- Higher slat rigidity
- Electrical control option
- Slim - low roll height - specific folding of slats

ISOTRA *Quality*

Cetta 65, 80 - handle

Basic Product Specification

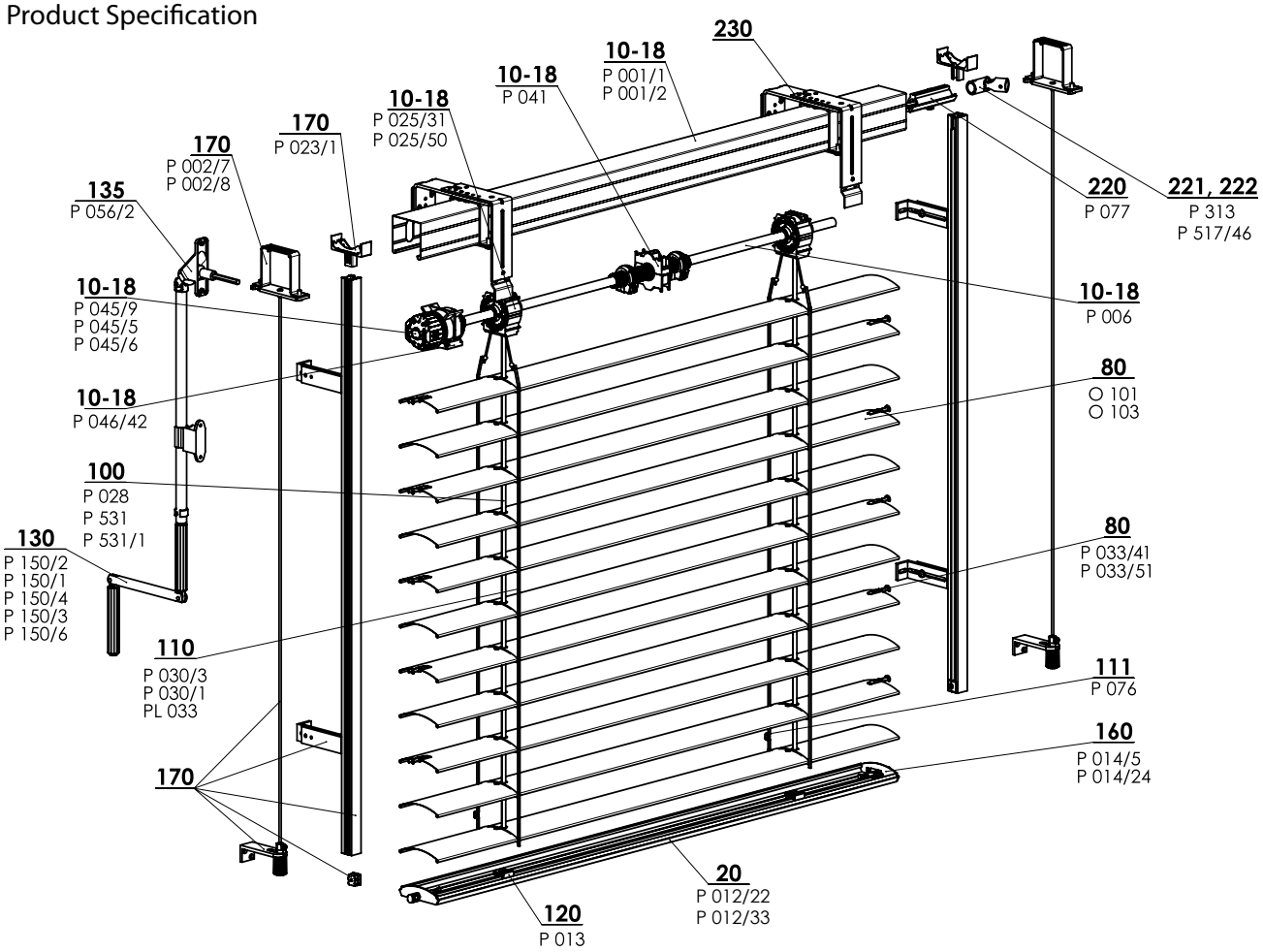

CETTA 65/80 - HANDLE 2-00171-XXXX-

Specification Cetta 65

	Head Rail		Bottom Rail	Slat	Side Guidance		Ladder	Textile Band	Assembly
					Steel Wire	Guiding Channel			
Commercial Name Dimension (mm) Material	P 001 56 x 58 Fe	P 001/2 58 x 60 Al	P 012/22 67 x 13 Al	O 101 0,42 x 83 Al	P 036 ø 3,2 Fe/PVC	See Chapter "Guidance" for guiding channel alternatives	P 030/3 58 x 70 PES	P 531 P 531/1 6x0,28 PES P 028 P 028 9004 8x0,34	See chapter „Assembly"
Color	Standard: galvanized steel plate natural (Al profil) Other RAL colors sprayed , DECORAL*		Standard: anodized aluminum Other RAL colors sprayed, DECORAL*	According to current ISOTRA a.s. scheme	grey	Basic design – anodized Varnished in RAL colors, DECORAL*	grey black	grey black	

Specification Cetta 80

	Head Rail		Bottom Rail		Slat	Side Guidance		Ladder	Textile Band	Assembly
						Steel Wire	Guiding Channel			
Commercial Name Dimension (mm) Material	P 001 56 x 58 Fe	P 001/2 58 x 60 Al	P 012/33 80,5x13,8 Al	P 012/34 80,5x13,8 Al	O 103 0,42 x 98 Al	P 036 ø 3,2 Fe/PVC	See Chapter "Guidance" for guiding channel alternatives	P 030/1 68 x 85 PES	P 531 P 531/1 6x0,28 PES P 028 P 028 9004 8x0,34	See chapter „Assembly"
Color	Standard: galvanized steel plate natural (Al profil) Other RAL colors sprayed , DECORAL*		Standard: anodized aluminum Other RAL colors sprayed, DECORAL*		According to current ISOTRA a.s. scheme	grey	Standard: anodized Other RAL colors sprayed, DECORAL*	grey black	grey black	

*Maximum dimension 4000mm.

We do not make atypical designs.

Standard Dimensions

Width (mm)		Height (mm)		Guaranteed Area (m^2)
min.	max.	min.	max.	max.
600	6000*	500	4000	8 (Handle control)

* Note: The wider the blind, the lower its wind resistace class - see "Wind resistance of exterior blinds", page 3-6.

Cetta 65, Cetta 80 klika (2-00171-XXXX)

Position	Item name	Business name - Abbreviation 2	Order number - Abbreviation 1
10 - 18	Head rail 56x58 Fe	P 001/1	3-00166-PU22
10 - 18	Head rail 58x60 Al	P 001/2	3-00166-PU22
10 - 18	End stop 56x58	P 041	2-00048-0000
10 - 18	Gearing	P 045/9	6-010260-0000
10 - 18	Gearing – 6mm, hexagonal	P 045/6	6-013233-0000
10 - 18	Gearing – 8mm, square	P 045/5	6-013232-0000
10 - 18	Flat rod	P 006	7-300198-0000
10 - 18	Bearing Stoma AX, tilting 38 st.	P 025/50	6-009832-0000
10-18	Bearing C80/C65 8 mm	P 025/61	2-01812-9004
10 - 18	Bearing C65, C80	P 025/31	2-01098-9004
10 - 18	Gearing holder 111 510 Stoma, inbus	P 046/42	6-014239-0000
20	Bottom rail C80	P 012/33 0703	7-303929-0703
20	Bottom rail C65 a Z70	P 012/22	7-302680-XXXX
21	Bottom rail C80 PREMIUM	P 012/34	7-304763-0000
80	Slat C65 Al 0,42x83	O 101/XXXX	6-001072-XXXX
80	Slat C80 Al 0,42x98	O 103/XXXX	6-001076-XXXX
80	End guidance for slat C left + right	P 033/41	3-03967-XXXX
80	End guidance "C" L+R (metal)	P 033/51	3-03964-PU19
80	End guidance flat - metal - snapping	P 033/33	7-302174-PU19
100	Textile band 6x0,28 mm	P 531	6-001284-XXXX
100	Textile band 6x0,28 mm - black	P 531/1	6-012700-XXXX
100	Texband 8x0,34 mm grey/black	P 028	6-001157-XXXX
110	Ladder C65 60x72 grey/black	P 030/3	7-301848-XXXX
110	Ladder C80 68x85 grey/black	P 030/1	6-001160-XXXX
110	Ladder shortening comb	PL 033	6-006197-0000
111	River sleeve	P 076	3-02367-0000
120	Texband holder	P 013	2-00039-0000
130	Handle 45° / 90° square	P 150/2	2-00299-0000
130	Handle 45° / 90° hexagonal	P 150/1	2-00298-0000
130	Handle removable (90°) square	P 150/4	2-00581-0000
130	Handle without bushing	P 150/8	2-01302-0000
130	Handle with cardan (90°) square	P 150/3	2-00300-0000
135	Bushing 90° white/brown/grey SQ 8x250 (23x85 mm)	P 056/2 XXXX	6-006684-XXXX
160	End caps lock C65 left+right	P 014/5 XXXX	2-00600-xxxx
160	End caps lock C80 left+right	P 014/24 XXXX	2-01118-XXXX
170	Guidance - wire/guiding channel + holder (56x58) left		2-00557-L001
170	Guidance - wire/guiding channel + holder (56x58) right		2-00557-P001
170	Upper head rail hanger - Fe PROFILE WINDSTABIL	P 002/7	2-01128-0000
170	Upper head rail hanger - Al PROFILE WINDSTABIL	P 002/8	2-01294-0000
170	Locking holder of guide rail	P 023/1	3-02758-9004
170	End-cap	P 019/3	2-01097-9004
220	Rod connector	P 077	6-001198-0000
221	Rod connector - articulated C65/80 and Z70/90	P 313	6-003075-0000
222	Gearing corner, D-46mm	P 517/46	6-017225-0000
230	Blind holder		2-00649-0000

Blind height (mm)	Packet height	
	Cetta 80	Cetta 80-Slim
500	125	110
600	130	115
700	140	120
800	145	125
900	150	130
1000	160	135
1100	165	140
1200	175	150
1300	180	150
1400	190	160
1500	195	165
1600	205	170
1700	210	175
1800	220	180
1900	220	185
2000	230	190
2100	235	195
2200	245	205

Blind height (mm)	Packet height	
	Cetta 80	Cetta 80-Slim
2300	250	205
2400	260	215
2500	265	220
2600	270	220
2700	280	230
2800	285	235
2900	295	240
3000	300	245
3100	310	250
3200	315	255
3300	325	265
3400	330	265
3500	340	275
3600	340	275
3700	350	285
3800	355	290
3900	365	295
4000	370	300

Cetta 80-Slim

Visible packet saving in comparison with Cetta 80.

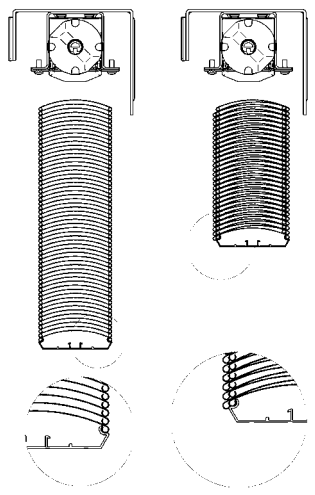

Cetta 65, 80 – motor

Basic Product Specification

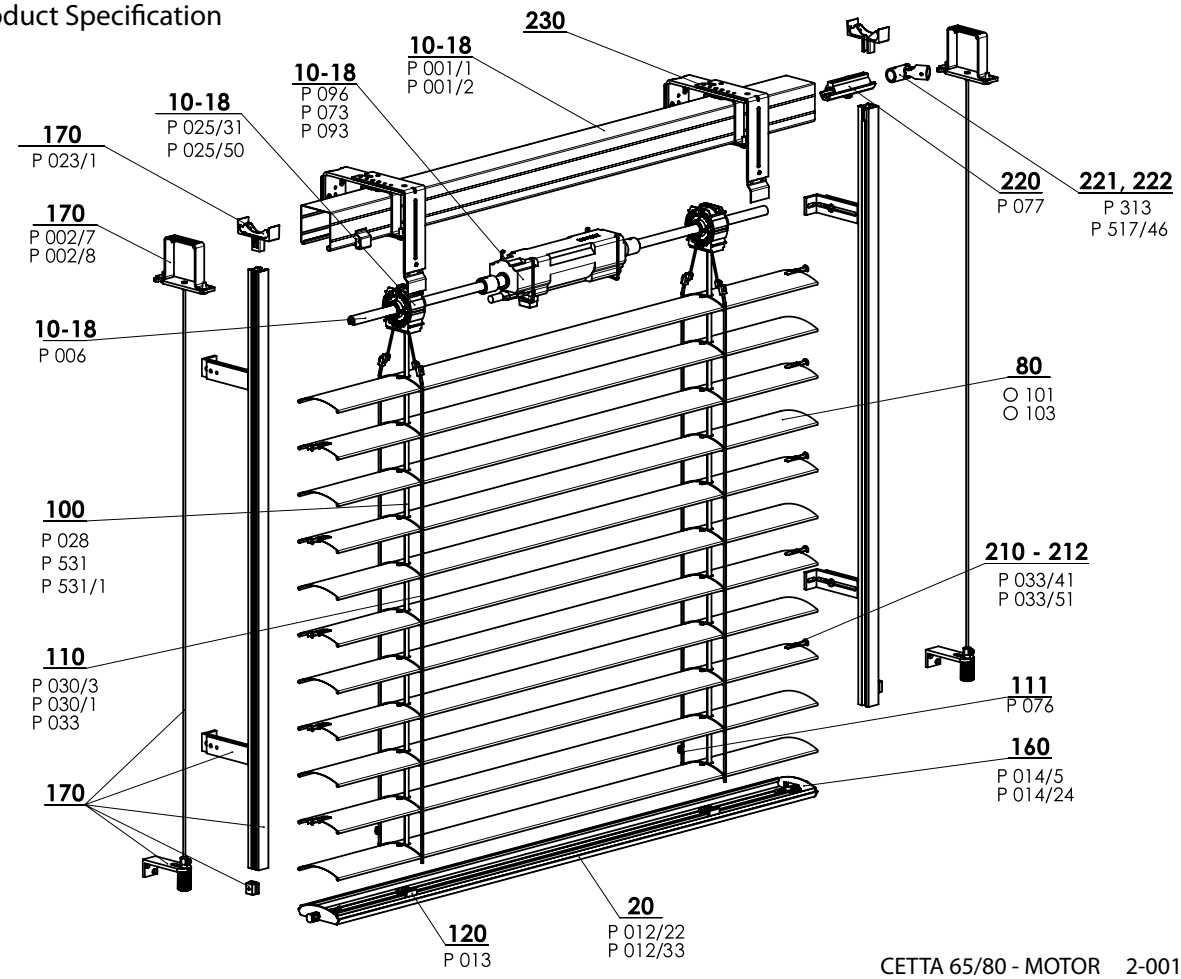

CETTA 65/80 - MOTOR 2-00172-XXXX-C

Specification Cetta 65

	Head Rail		Bottom Rail	Slat	Side Guidance		Ladder	Textile Band	Assembly
					Steel Wire	Guiding Channel			
Commercial Name Dimension Material	P 001/1 56 x 58 Fe	P 001/2 58 x 60 Al	P 012/22 67 x 13 Al	O 101 0,42 x 83 Al	P 036 ø 3,2 Fe/PVC	Variants of guiding channels in Chapter "Guides"	P 030/3 60 x 72 PES	P 531, P531/1 6 x 0,28 PES P 028 P 028 9004 8x0,34	Variants of installation in Chapter "Assembly"
Color	Standard: Galvanized steel plate natural (Al profil) Other RAL colors sprayed, DECORAL*		Standard: anodized aluminium Other RAL colors sprayed, DECORAL*	According to current ISOTRA a. s. scheme	grey black	Basic design - anodized Varnished in RAL colors, DECORAL*	grey black	grey black	

We do not make atypical designs.

Specification Cetta 80

	Head Rail		Bottom Rail		Slat	Side Guidance		Ladder	Textile Band	Assem
						Steel Wire	Guiding Channel			
Commercial Name Dimension Material	P 001/1 56 x 58 Fe	P 001/2 58 x 60 Al	P 012/33 80,5 x 13,8 Al	P 012/34 80,5 x 13,8 Al	O 103 0,42 x 98 Al	P 036 ø 3,2 Fe/PVC	Variants of guiding channels in Chapter "Guides"	P 030/1 68 x 85 PES	P 531, P531/1 6 x 0,28 PES P 028 P 028 9004 8x0,34	Variants of ins in Chapter "As
Color	Standard: Galvanized steel plate natural (Al profil) Other RAL colors sprayed, DECORAL*		Standard: anodized aluminium Other RAL colors sprayed, DECORAL*		According to current ISOTRA a. s. scheme	grey black	Basic design - anodized Varnished in RAL colors, DECORAL*	grey black	grey black	

*Maximum dimension 4000mm.

We do not make atypical designs.

Standard dimensions

Width (mm)		Height (mm)		Guaranteed area (m²)
min.	max.	min.	max.	max.
600	6000*	500	4000	16 (Cetta 80 Flexi) 24

* Note: The wider the blind, the lower its wind resistace class - see "Wind resistance of exterior blinds", page 3-6.

Cetta 65, Cetta 80 motor (2-00172-XXXX)

Position	Item name	Business name - Abbreviation 2	Order number - Abbreviation 1
10-18	Head rail 56x58 Fe	P 001/1	3-00166-PU22
10-18	Head rail 58x60 Al	P 001/2	7-301180-0000
10-18	Motors (ELERO) EX. BLINDS	P 096	2-00648-0000
10-18	Motors (SOMFY) EX. BLINDS	P 073	2-00512-0000
10-18	Motors (GEIGER) EX. BLINDS	P 093	2-00572-0000
10-18	Shaft	P 006	7-300198-0000
10-18	Bearing C80/C65 8 mm	P 025/61	2-01812-9004
10-18	Bearing C65, C80	P 025/31	2-01098-9004
10-18	Bearing Stoma AX, tilting 38 st.	P 025/50	6-009832-0000
20	Bottom rail profile C65 and Z70	P 012/22	7-302680-XXXX
20	Bottom rail profile C80	P 012/33 0703	7-303929-0703
21	Bottom rail C80 PREMIUM	P 012/34	7-304763-0000
80	Slat C65 Al 0,42x83	O 101/XXXX	6-001072-XXXX
80	Slat C80 Al 0,42x98	O 103/XXXX	6-001076-XXXX
100	Textile band 6x0,28 mm	P 531	6-001284-XXXX
100	Textile band 6x0,28 mm - black	P 531/1	6-012700-XXXX
100	Textile band 8x0,34 mm grey/black	P 028	6-001157-XXXX
110	Ladder C65 60x72 grey/black	P 030/3	7-301848-0000
110	Ladder C80 60x72 grey/black	P 030/1	6-001160-XXXX
110	Ladder shortening comb	PL 033	6-006197-0000
110	River sleeve	P 076	3-02367-0000
120	Textile band holder	P 013	2-00039-0000
160	End caps lock C65 left+right	P 014/5 XXXX	2-00600-XXXX
160	End caps lock C80 left+right	P 014/24 XXXX	2-01118-XXXX
170	Guidance - wire/guiding channel + holder LEFT		2-00557-L001
170	Guidance - wire/guiding channel + holder RIGHT		2-00557-P001
170	Head rail holder - Fe profile Windstabil	P 002/7	2-01128-0000
170	Head rail holder - Al profile Windstabil	P 002/8	2-01294-0000
170	Locking holder of guide rail	P 023/1	3-02758-9004
210-212	End guidance for slat "C" left+right	P 033/41	3-03967-XXXX
210-212	End guidance "C" L+R (metal)	P 033/51	3-03964-PU19
220	Rod connector	P 077	6-001198-0000
221	Rod connector - articulated C65/80 and Z70/90	P 313	6-003075-0000
222	Gearing corner, D-46mm	P 517/46	6-017225-0000
230	Blind holders		2-00649-0000

Blind height (mm)	Packet height	
	Cetta 80	Cetta 80-Slim
500	145	130
600	150	135
700	160	140
800	165	145
900	170	150
1000	180	155
1100	185	160
1200	195	170
1300	200	170
1400	210	180
1500	215	185
1600	225	190
1700	230	195
1800	240	200
1900	240	205
2000	250	210
2100	255	215
2200	265	225

Blind height (mm)	Packet height	
	Cetta 80	Cetta 80-Slim
2300	270	225
2400	280	235
2500	285	240
2600	290	240
2700	300	250
2800	305	255
2900	315	260
3000	320	265
3100	330	270
3200	335	275
3300	345	285
3400	350	285
3500	360	295
3600	360	295
3700	370	305
3800	375	310
3900	385	315
4000	390	320

Cetta 80-Slim

Visible packet saving in comparison with Cetta 80.

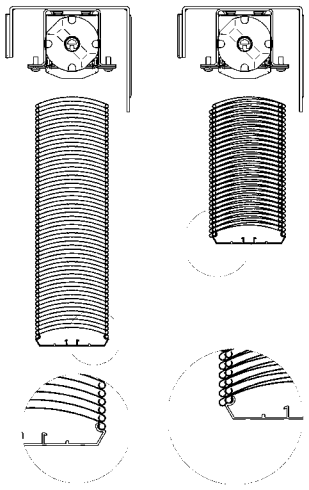

Cetta 60 Flexi
Basic Product Specification

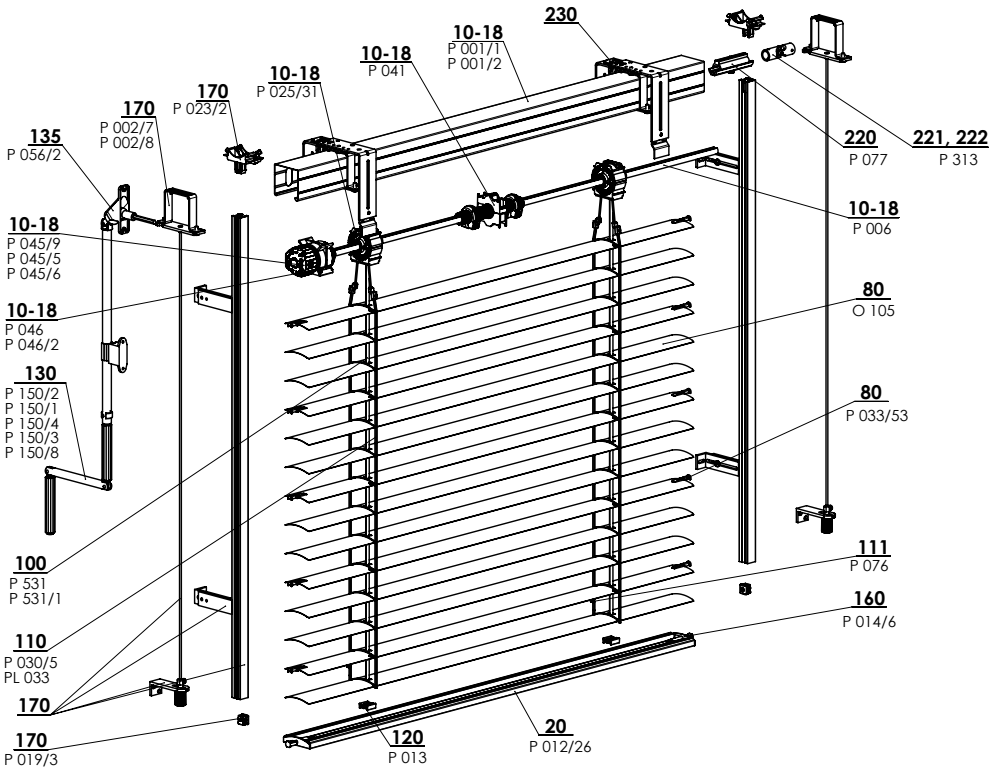

FLEXI 60 - HANDLE 2-01439-XXXX-0

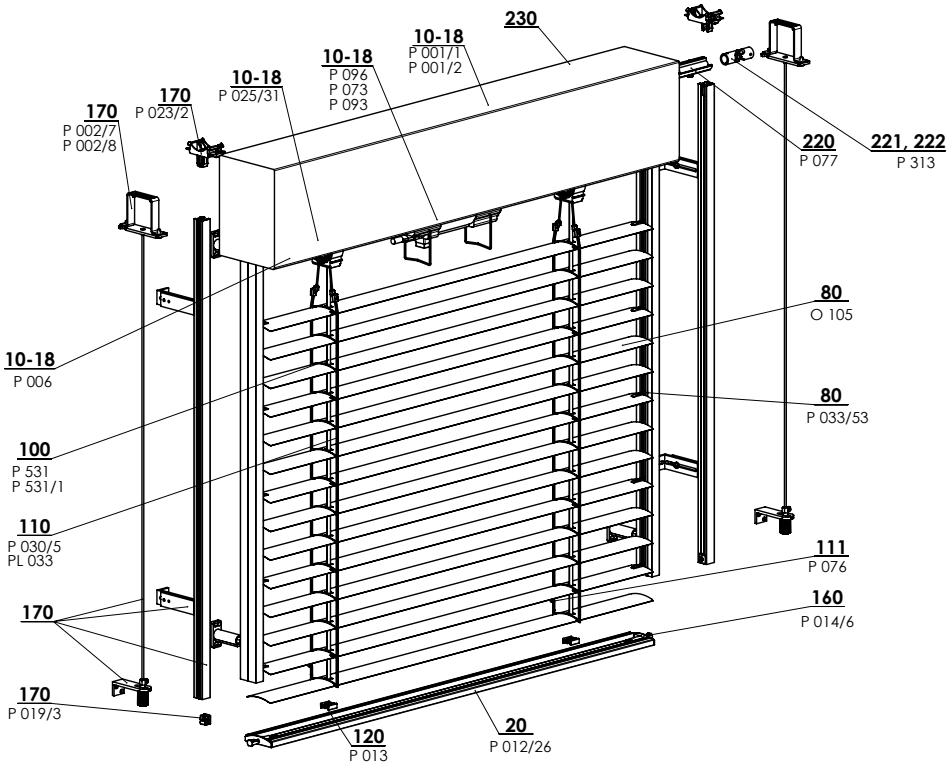

FLEXI 60 - MOTOR 2-01440-XXXX-A

Specification Cetta 60 Flexi

	Head Rail		Bottom Rail	Slat	Side Guidance		Ladder	Textile Band
					Steel Wire	Guiding Channel		
Commercial Name	P 001/1	P 001/2	P 012/26	O 105	P 036	Variants of guiding channels in Chapter "Guides"	P 030/5	P 531, P 531/1
Dimension (mm)	56 x 58	58 x 60	64,5 x 12,7	0,40 x 60	ø 3,2		52 x 65	6 x 0,28
Material	Fe	Al	Al	Al	Fe/PVC		PES	PES P 028 P 028 9004 8x0,34
Color	Standard: Galvanized steel plate Other RAL colors sprayed,		Standard: Galvanized steel plate Other RAL colors sprayed,	According to current ISOTRA a. s. scheme	grey black	Standard: anodized Other RAL colors sprayed	grey black	grey black

We do not make atypical designs.

Standard dimensions

Width (mm)		Height (mm)		Guaranteed area m²
min.	max.	min.	max.	max.
600	4000	500	4000	8 (handle) 16 (motor)

Cetta 60 Flexi - handle, motor (2-01439-XXXX-0, 2-01440-XXXX-0)

Position	Item name	Business name - Abbreviation 2	Order number - Abbreviation 1
10-18	Head rail 56x58 Fe	P 001/1	3-00166-PU22
10-18	Head rail 58x60 Al	P 001/2	7-301180-0000
10-18	End stop 56x58	P 041	2-00048-9004
10-18	Gearing	P 045/9	6-010260-0000
10-18	Gearing plastic 6 mm hexagonal 14 mm exit, 46 mm	P 045/6	6-013233-0000
10-18	Gearing plastic 8 mm hexagonal 14 mm exit, 46 mm	P 045/5	6-013232-0000
10-18	Gearing holder 111 510 Stoma, inbus	P 046/42	6-014239-0000
10-18	Bearing C80/C65 8 mm	P 025/61	2-01812-9004
10-18	Bearing C65, C80	P 025/31	2-01098-9004
10-18	Bearing Stoma AX, tilting 38 st.	P 025/50	6-009832-0000
10-18	Shaft	P 006	7-300198-0000
10-18	Motors (ELERO) EX. BLINDS	P 096	2-00648-0000
10-18	Motors (SOMFY) EX. BLINDS	P 073	2-00512-0000
10-18	Motors (GEIGER) EX. BLINDS	P 093	2-00572-0000
20	Bottom rail profile C60F	P 012/26	7-303193-XXXX
80	Slat Al 0,40x60	O 105	6-015422-XXXX
80	End guidance for slat "F" L+R	P 033/43	3-03969-xxxx
80	End guidance for slat "F" L+R metal	P 033/53	3-03966-PU19
100	Textile band 6x0,28 mm	P 531	6-001284-XXXX
100	Textile band 6x0,28 mm - black	P 531/1	6-012700-XXXX
100	Textile band 8x0,34 mm grey/black	P 028	6-001157-XXXX
110	Ladder C60F 52x65	P 030/5	6-015600-XXXX
110	Ladder shortening comb	PL 033	6-006197-0000
111	River sleeve	P 076	3-02367-0000
120	Textile band holder	P 013	2-00039-0000
130	Complete handle square (45°/90°)	P 150/2	2-00299-0000
130	Complete handle hexagonal (45°/90°)	P 150/1	2-00298-0000
130	Complete handle removable square 90°	P 150/4	2-00581-0000
130	Complete handle with cardan square 90°	P 150/3	2-00300-0000
130	Complete handle without bushing	P 150/8	2-01302-0000
135	Bushing 90° white SQ 8x250 (23x85 mm)	P 056/2	6-006684-XXXX
160	End caps lock C60F left+right	P 014/6	2-01434-XXXX
170	Guidance - wire/guiding channel + holders		see Guidance
170	Head rail holder - Fe profile Windstabil	P 002/7	2-01128-0000
170	Head rail holder - Al profile Windstabil	P 002/8	2-01294-0000
170	Locking holder of guide rail	P 023/1	3-02758-9004
170	Set Holder-wire	P 023/2	2-01516-9004
170	Guide rail stop - set	P 019/3	2-01097-9004
220	Rod connector	P 077	6-001198-0000
221	Rod connector - articulated C65/80 and Z70/90	P 313	6-003075-0000
222	Gearing corner, D-46mm	P 517/46	6-017225-0000

Cetta 80 Flexi

Basic Product Specification

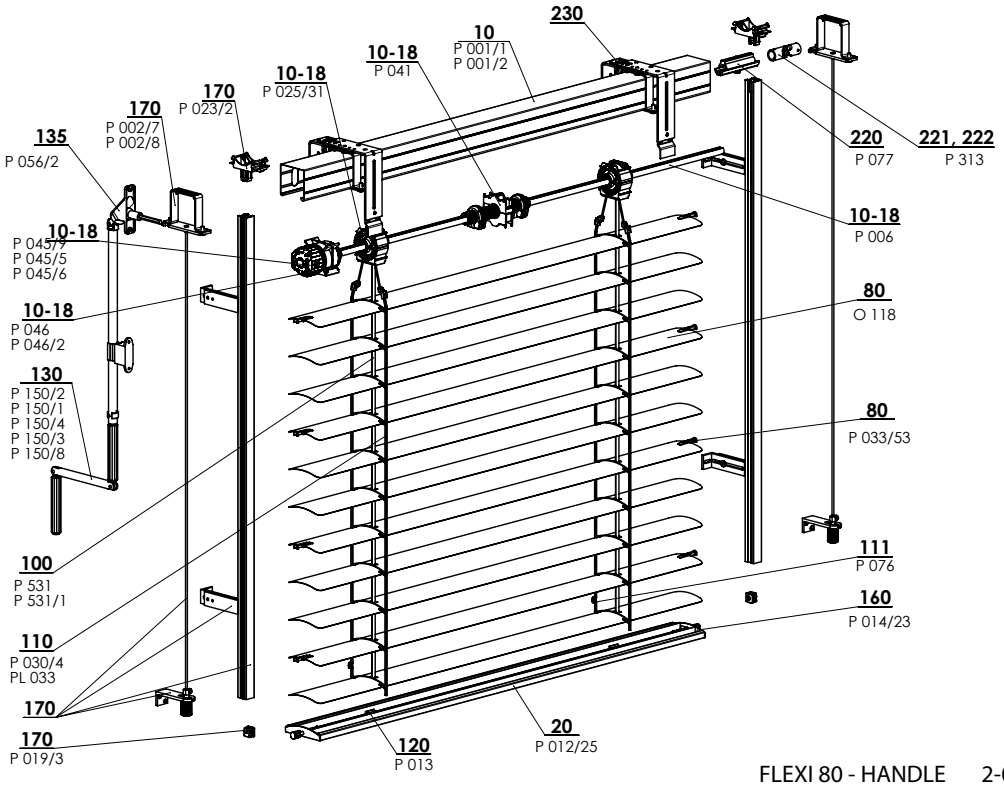

FLEXI 80 - HANDLE 2-00135-XXXX-E

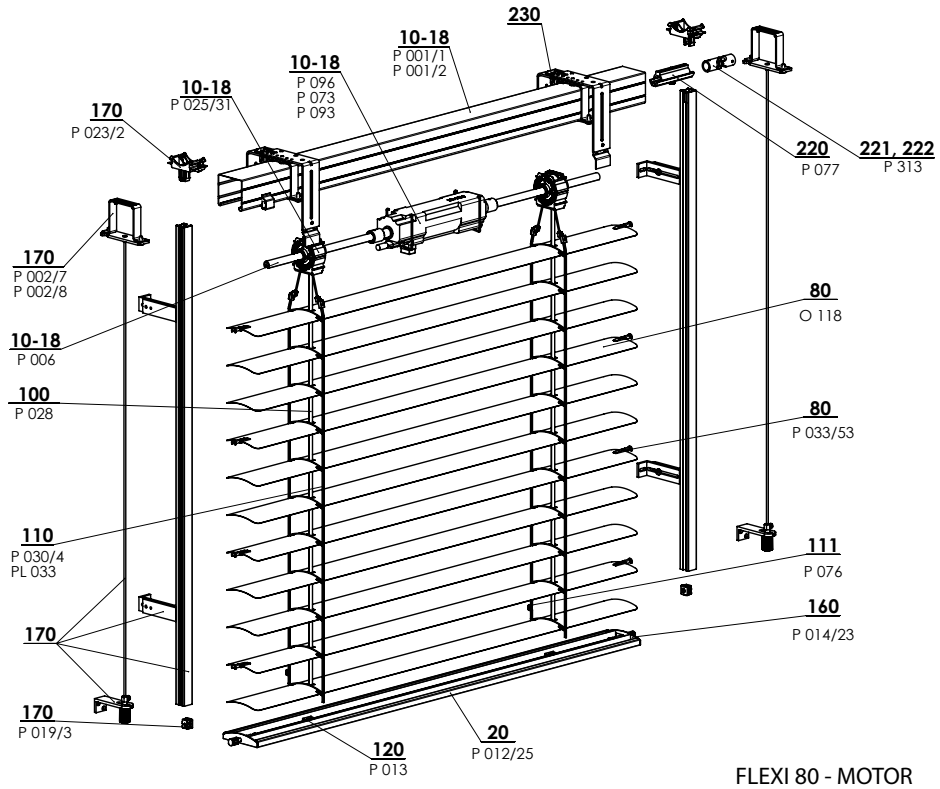

FLEXI 80 - MOTOR 2-00138-XXXX-D

Standard Dimensions

Width (mm)		Height (mm)		Guaranteed area (m^2)
min.	max.	min.	max.	max.
600	4000*	500	4000	8 (handle) 16 (motor)

* Note: The wider the blind, the lower its wind resistace class - see "Wind resistance of exterior blinds", page 3-6.

Specification Cetta 80 Flexi

	Head Rail		Bottom Rail	Slat	Side Guidance		Ladder	Textile band
					Steel Wire	Guiding Channel		
Commercial Name **Dimension (mm)** **Material**	P 001/1 56 x 58 Fe	P 001/2 56 x 58 Al	P012/25 80 x 13 Al	O 118 0,40 x 80 Al	P 036/1 ø 3,2 Fe/PVC	Variants of guiding channels in Chapter "Guides"	P 030/4 69 x 85	P 531, P 531/1 6x0,28 PES P 028 P 028 9004 8x0,34
Colour	Standard: galvanized sheet Other RAL sprayed DECORAL*		Standard: satin anodized sheet Other RAL sprayed DECORAL*	According to the actual sampler from ISOTRA a. s.	grey black	Standard: satin anodized sheet Other RAL sprayed	grey black	grey

*Maximum dimension 4000mm.

Cetta 80 Flexi - handle (2-00135-XXXX)

Position	Item name	Business name - Abbreviation 2	Order number - Abbreviation 1
10-18	Head rail 56x58 Fe	P 001/1	3-00166-PU22
10-18	Head rail 58x60 Al	P 001/2	7-301180-0000
10-18	Bearing C80/C65 8 mm	P 025/61	2-01812-9004
10-18	Bearing C80 / C65	P 025/31	2-01098-9004
10-18	Bearing Stoma AX, tilting 38 st.	P 025/50	6-009832-0000
10-18	End stop 56x58	P 041	2-00048-9004
10-18	Gearing	P 045/9	6-010260-0000
10-18	Gearing plastic 6 mm hexagonal 14 mm exit, 46 mm	P 045/6	6-013233-0000
10-18	Gearing plastic 8 mm hexagonal 14 mm exit, 46 mm	P 045/5	6-013232-0000
10-18	Gearing holder 111 510 Stoma, inbus	P046/42	6-014239-0000
10-18	Shaft	P 006	7-300198-0000
20	Bottom rail profile C80 Flexi	P 012/25	7-302886-XXXX
80	Slat C80 Flexi Al 0,40x80	O 118	6-001098-XXXX
100	Textile band 6x0,28 mm	P 531	6-001284-9006
100	Textile band 6x0,28 mm black	P 531/1	6-012700-9004
100	Textile band 8x0,34 mm grey/black	P 028	6-001157-XXXX
110	Ladder C80F 69x85 grey/black	P 030/4	6-012862-XXXX
110	River sleeve	PL 033	6-006197-0000
111	Ladder shortening comb	P 076	3-02367-0000
130	Complete handle square (45°/90°)	P 150/2	2-00299-0000
130	Complete handle hexagonal (45°/90°)	P 150/1	2-00298-0000
130	Complete handle removable square 90°	P 150/4	2-00581-0000
130	Complete handle with cardan square 90°	P 150/3	2-00300-0000
130	Complete handle without bushing	P 150/8	2-01302-0000
135	Bushing 90° white SQ 8x250 (23x85 mm)	P 056/2	6-006684-XXXX
160	End caps lock C80F left+right	P 014/23	2-01326-XXXX
170	Guidance - wire/guiding channel + holder (56x58) left		2-00557-L001
170	Guidance - wire/guiding channel + holder (56x58) right		2-00557-P001
170	Head rail holder - Fe profile Windstabil	P 002/7	2-01128-0000
170	Head rail holder - Al profile Windstabil	P 002/8	2-01294-0000
170	Locking holder of guide rail	P 023/1	3-02758-9004
170	Set Holder-wire	P 023/2	2-01516-9004
170	Guide rail stop - set	P 019/3	2-01097-9004
210-212	End guidance for slat "F" L+R metal	P 033/53	3-03966-PU19
220	Rod connector	P 077	6-001198-0000
221	Rod connector - articulated C65/80 and Z70/90	P 313	6-003075-0000
222	Gearing corner, D-46mm	P 517/46	6-017225-0000
230	Blind holders		2-00649-0000

Cetta 80 Flexi - motor (2-00138-XXXX)

Position	Item name	Business name - Abbreviation 2	Order number - Abbreviation 1
10-18	Head rail 56x58 Fe	P 001/1	3-00166-PU22
10-18	Head rail 58x60 Al	P 001/2	7-301180-0000
10-18	Motors (ELERO) EX. BLINDS	P 096	2-00648-0000
10-18	Motors (SOMFY) EX. BLINDS	P 073	2-00512-0000
10-18	Motors (GEIGER) EX. BLINDS	P 093	2-00572-0000
10-18	Shaft	P 006	7-300198-0000
10-18	Bearing C80/C65 8 mm	P 025/61	2-01812-9004
10-18	Bearing C80 / C65	P 025/31	2-01098-9004
10-18	Bearing Stoma AX, tilting 38 st.	P 025/50	6-009832-0000
20	Bottom rail C80 Flexi	P 012/25	7-302886-XXXX
80	Slat C80 Flexi Al 0,40x80	O 118	6-001098-XXXX
100	Textile band 6x0,28 mm	P 531	6-001284-XXXX
100	Textile band 6x0,28 mm - black	P 531/1	6-012700-XXXX
100	Textile band 8x0,34 mm grey/black	P 028	6-001157-XXXX
110	Ladder C80F 69x85 grey/black	P 030/4	6-012862-XXXX
110	River sleeve	PL 033	6-006197-0000
111	Ladder shortening comb	P 076	3-02367-0000
120	Texband holder	P 013	2-00039-0000
160	End caps lock C80F left+right	P 014/23	2-01326-XXXX
170	Guidance - wire/guiding channel + holders (56x58) left		2-00557-L001
170	Guidance - wire/guiding channel + holders (56x58) left		2-00557-P001
170	Head rail holder - Fe profile Windstabil	P 002/7	2-01128-0000
170	Head rail holder - Al profile Windstabil	P 002/8	2-01294-0000
170	Locking holder of guide rail	P 023/1	3-02758-9004
170	Set Holder-wire	P 023/2	2-01516-9004
170	Guide rail stop - set	P 019/3	2-01097-9004
210-212	End guidance for slat "F" L+R	P 033/43	3-03969-xxxx
210-212	End guidance for slat "F" L+R metal	P 033/53	3-03966-PU19
220	Rod connector	P 077	6-001198-0000
221	Rod connector - articulated C65/80 and Z70/90	P 313	6-003075-0000
222	Gearing corner, D-46mm	P 517/46	6-017225-0000
230	Blind holders		2-00649-0000

Cetta 100 Flexi

Basic product specifikation

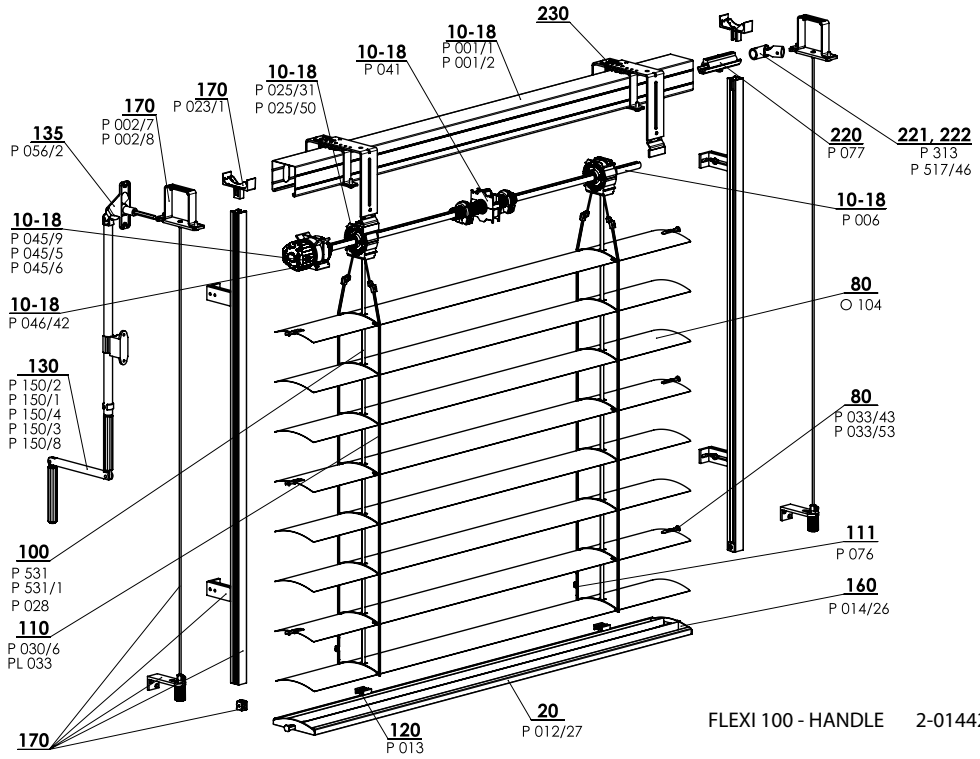

FLEXI 100 - HANDLE 2-01442-XXXX-0

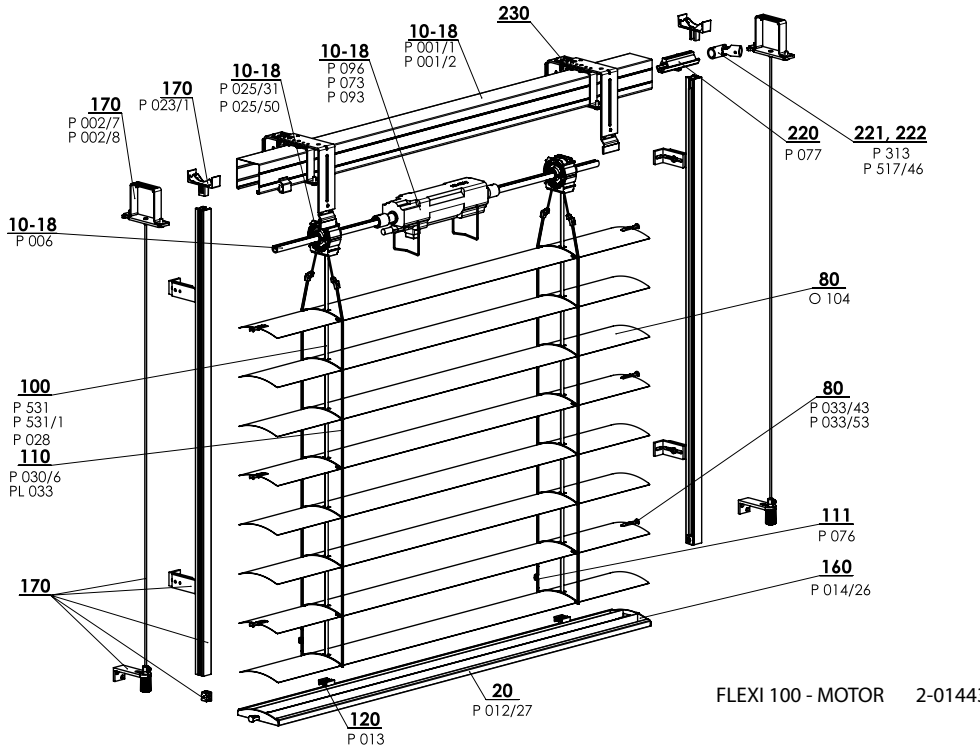

FLEXI 100 - MOTOR 2-01443-XXXX-0

Standard dimensions

Width (mm)		Height (mm)		Guaranteed area (m²)
min.	max.	min.	max.	max.
600	4000*	500	4000	8 (handle) 16 (motor)

* Note: The wider the blind, the lower its wind resistace class - see "Wind resistance of exterior blinds", page 3-6.

Specification Cetta 100 Flexi

	Head Rail		Bottom Rail	Slat	Side Guidance		Ladder	Textile band
					Steel Wire	Guiding Channel		
Commercial Name **Dimension (mm)** **Material**	P 001/1 56 x 58 Fe 	P 001/2 58 x 60 Al 	P 012/27 103,5 x 17 Al 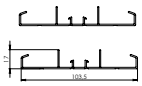	O 104 0,40 x 100 Al 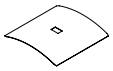	P 036 Ø 3,2 Fe/PVC	Variants of guiding channels in Chapter "Guides"	P 030/6 85 x 105 PES	P 531, P 531/1 6 x 0,28 PES
Colour	Standard: galvanized sheet Other RAL sprayed		Standard: elox Other RAL sprayed	According to the actual sampler from ISOTRA a. s.	grey black	Standard: elox Other RAL sprayed	grey black	grey black

Cetta100 Flexi-handle, motor (2-01442-XXXX-0, 2-01443-XXXX-0)

Position	Item name	Business name - Abbreviation 2	Order number - Abbreviation 1
10 - 18	Head rail	P 001/1	3-00166-PU22
10 - 18	Head rail 58x60 Al	P 001/2	7-301180-0000
10 - 18	End stop 56x58	P 041	2-00048-9004
10 – 18	Gearing	P 045/9	6-010260-0000
10 – 18	Gearing plastic 6 mm hexagonal 14 mm exit, 46 mm	P 045/6	6-013233-0000
10 – 18	Gearing plastic 8 mm hexagonal 14 mm exit, 46 mm	P 045/5	6-013232-0000
10 - 18	Gearing holder 111 510 Stoma, inbus	P 046/42	6-014239-0000
10 - 18	Bearing C80, C65	P 025/31	2-01098-9004
10 - 18	Bearing Stoma AX, tilting 38 st.	P 025/50	6-009832-0000
10 - 18	Shaft	P 006	7-300198-0000
10 – 18	Motors (ELERO) EX. BLINDS	P 096	2-00648-0000
10 – 18	Motors (SOMFY) EX. BLINDS	P 073	2-00512-0000
10 – 18	Motors (GEIGER) EX. BLINDS	P 093	2-00572-0000
20	Bottom rail profile C100F	P 012/27	7-3031934XXXX
80	Slat Al 0,40x10	O 104	6-015421-XXXX
80	End guidance for slat "F" L+R	P 033/43	3-03969-xxxx
80	End guidance for slat "F" L+R metal	P 033/53	3-03966-PU19
100	Textile band 6x0,28 mm	P 531	6-001284-XXXX
100	Textile band 6x0,28 mm - black	P 531/1	6-012700-XXXX
110	Ladder C100F 85x105	P 030/6	6-015618-XXXX
110	River sleeve	PL 033	6-006197-0000
111	Ladder shortening comb	P 076	3-02367-0000
120	Textile band holder	P 013	2-00039-0000
130	Complete handle square (45°/90°)	P 150/2	2-00299-0000
130	Complete handle hexagonal (45°/90°)	P 150/1	2-00298-0000
130	Complete handle removable square 90°	P 150/4	2-00581-0000
130	Complete handle with cardan square 90°	P 150/3	2-00300-0000
130	Complete handle without bushing	P 150/8	2-01302-0000
135	Bushing 90° white SQ 8x250 (23x85 mm)	P 056/2	6-006684-XXXX
160	End caps lock C60F left+right	P 014/26	2-01435-XXXX
170	Guidance - wire/guiding channel + holders		see Guidance
170	Head rail holder - Fe profile Windstabil	P 002/7	2-01128-0000
170	Head rail holder - Al profile Windstabil	P 002/8	2-01294-0000
170	Locking holder of guide rail P 023/1	P 023/1	3-02758-9004
220	Rod connector	P 077	6-001198-0000
221	Rod connector - articulated C65/80 and Z70/90	P 313	6-003075-0000
222	Gearing corner, D-46mm	P 517/46	6-017225-0000

CETTA 80 EXTERIOR BLIND DIAGRAM

VERTICAL SECTION HANDLE CONTROL

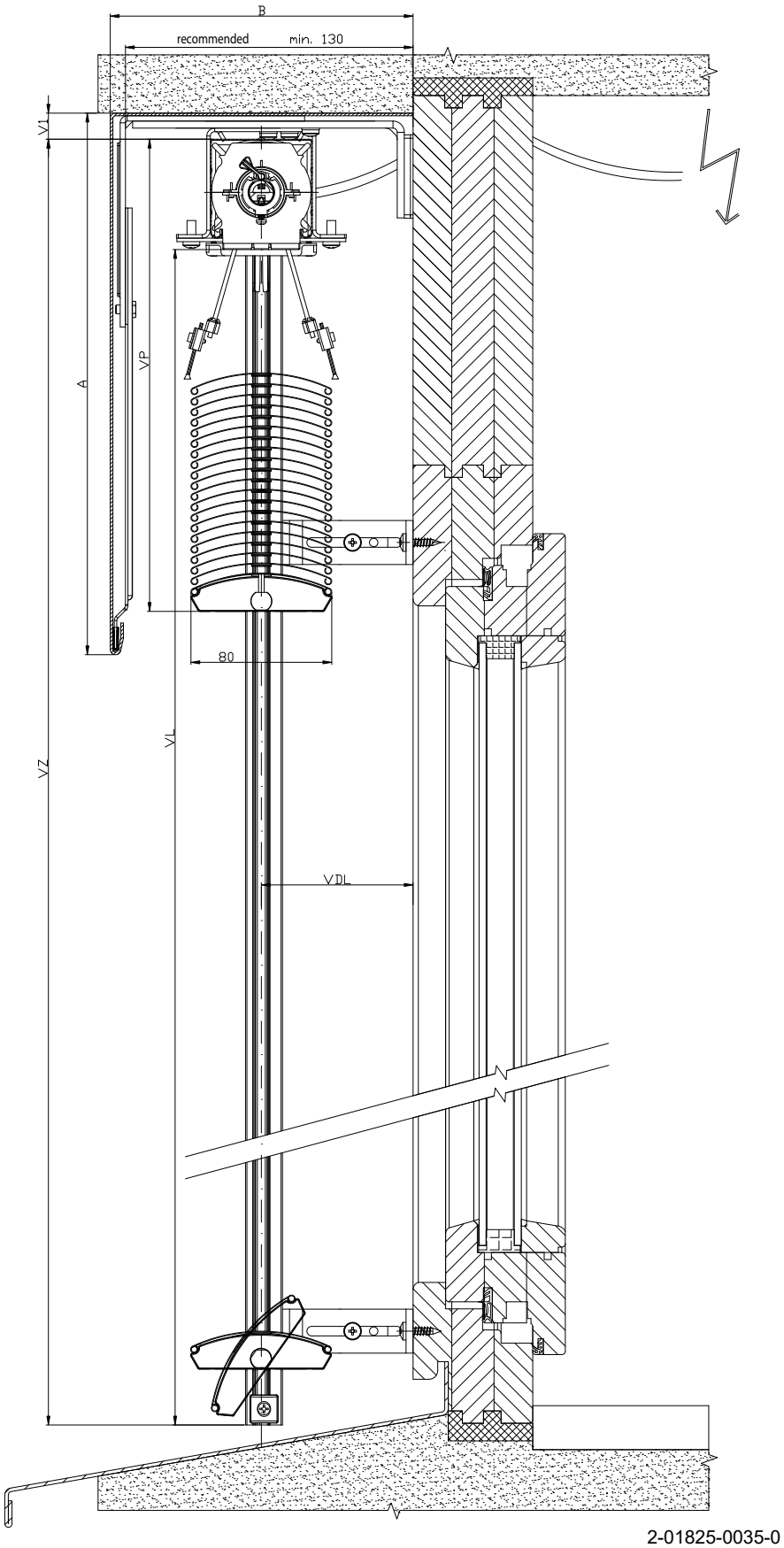

2-01825-0035-0

CETTA 80, CETTA 65 EXTERIOR BLIND DIAGRAM

HORIZONTAL SECTION HANDLE CONTROL

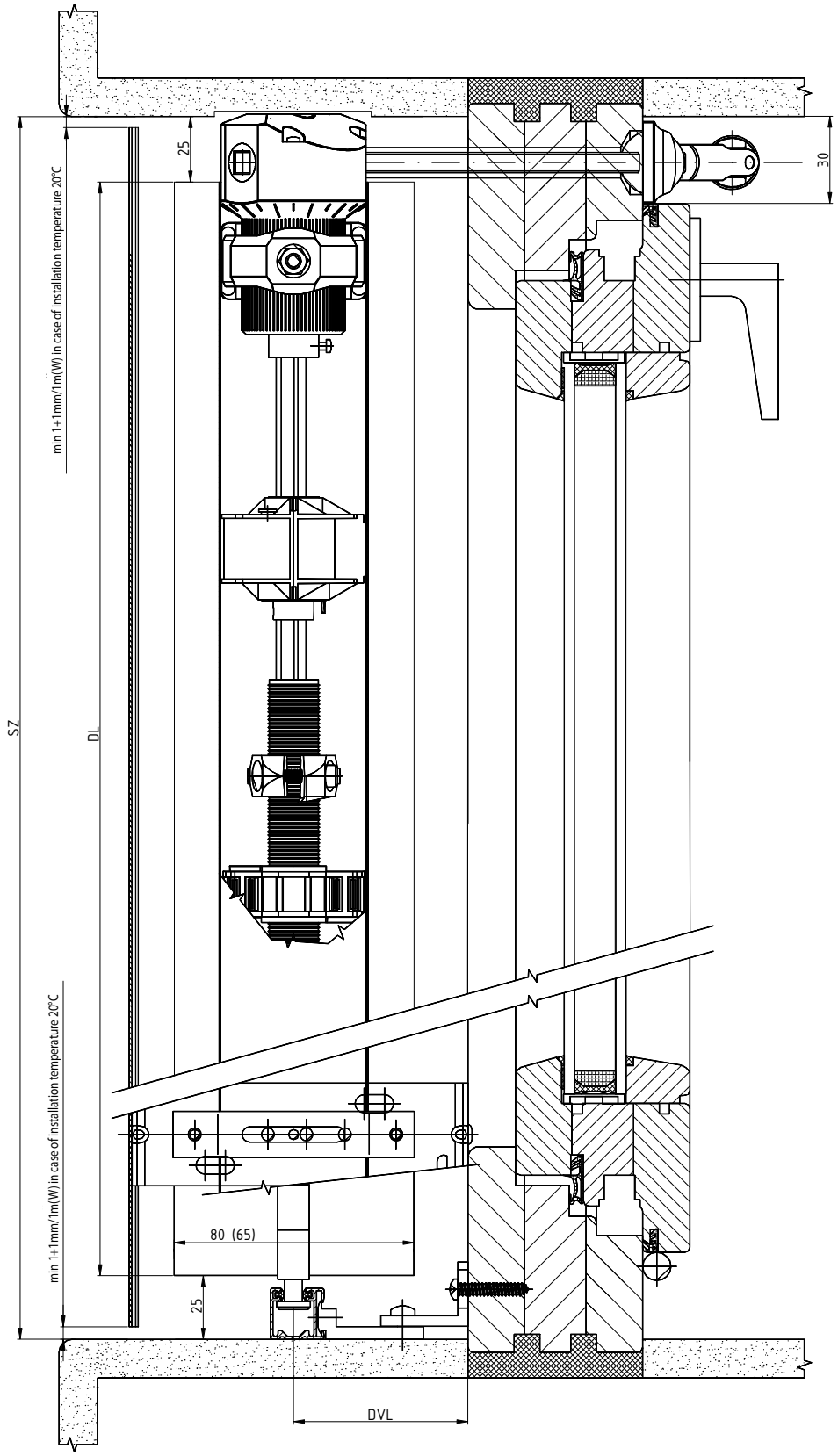

2-01825-0078-0

CETTA 80 EXTERIOR BLIND DIAGRAM

VERTICAL SECTION HANDLE CONTROL

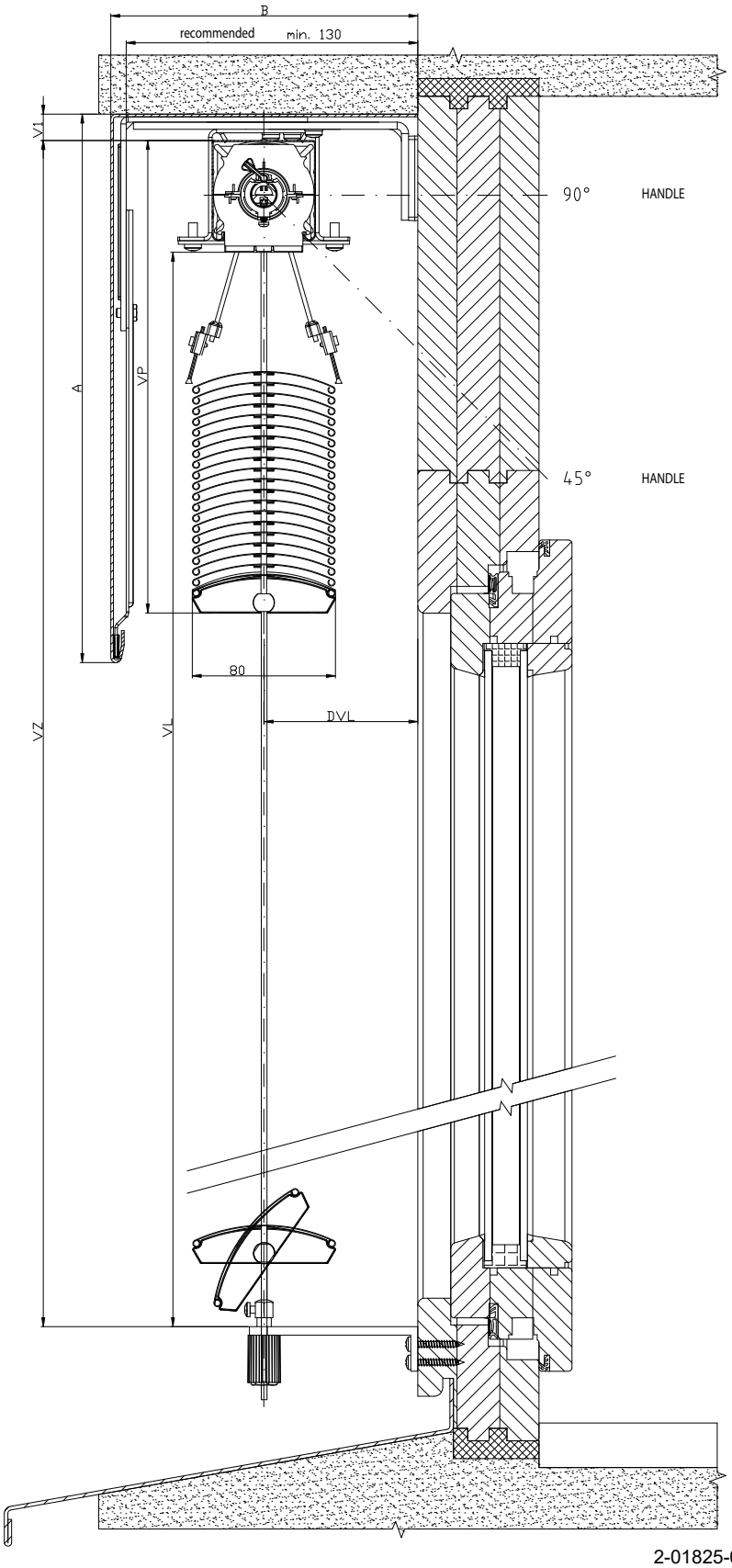

2-01825-0030-0

CETTA 65 EXTERIOR BLIND DIAGRAM

VERICAL SECTION HANDLE CONTROL

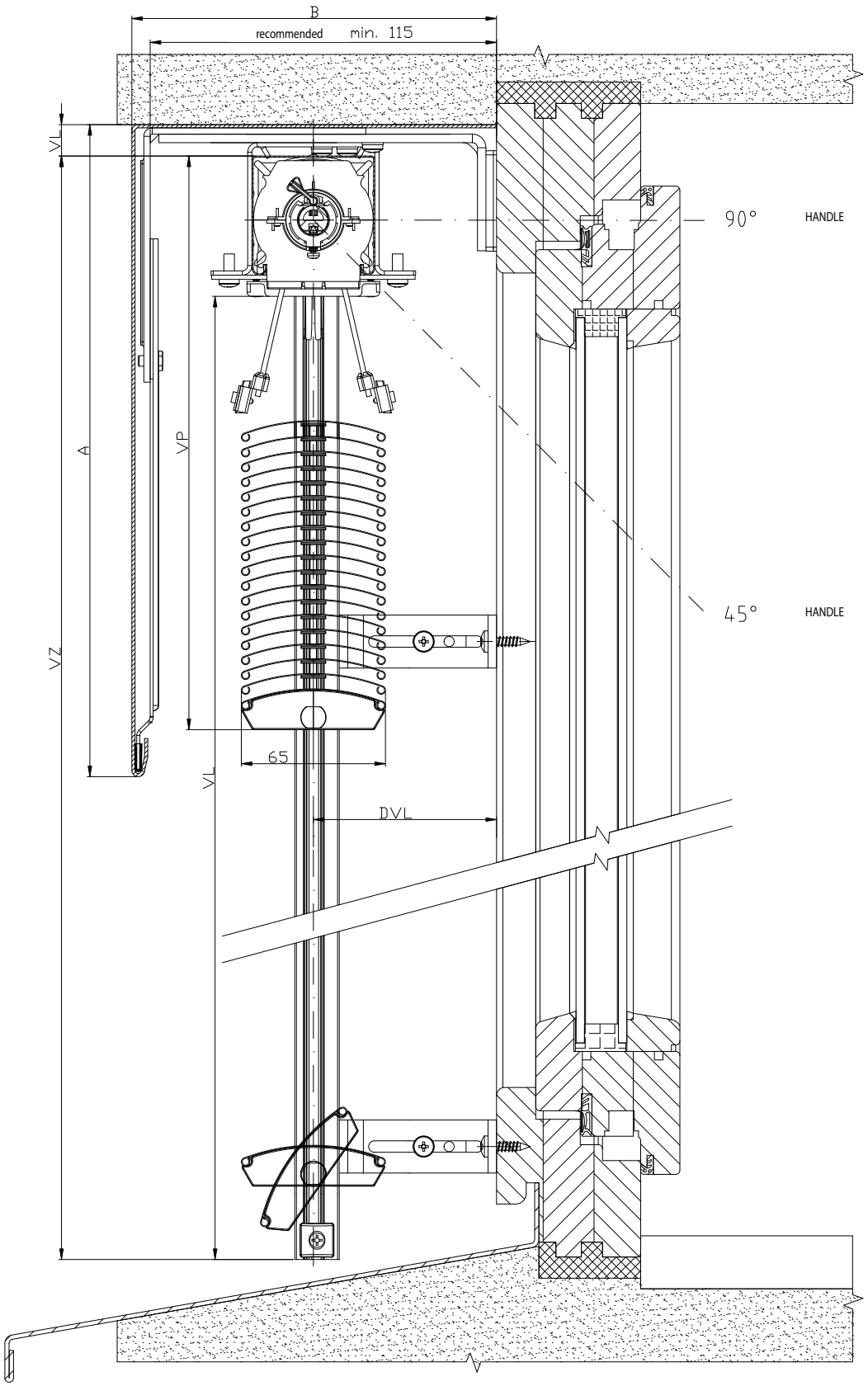

2-01825-0016-0

CETTA 80 EXTERIOR BLIND DIAGRAM

VERICAL SECTION HANDLE CONTROL

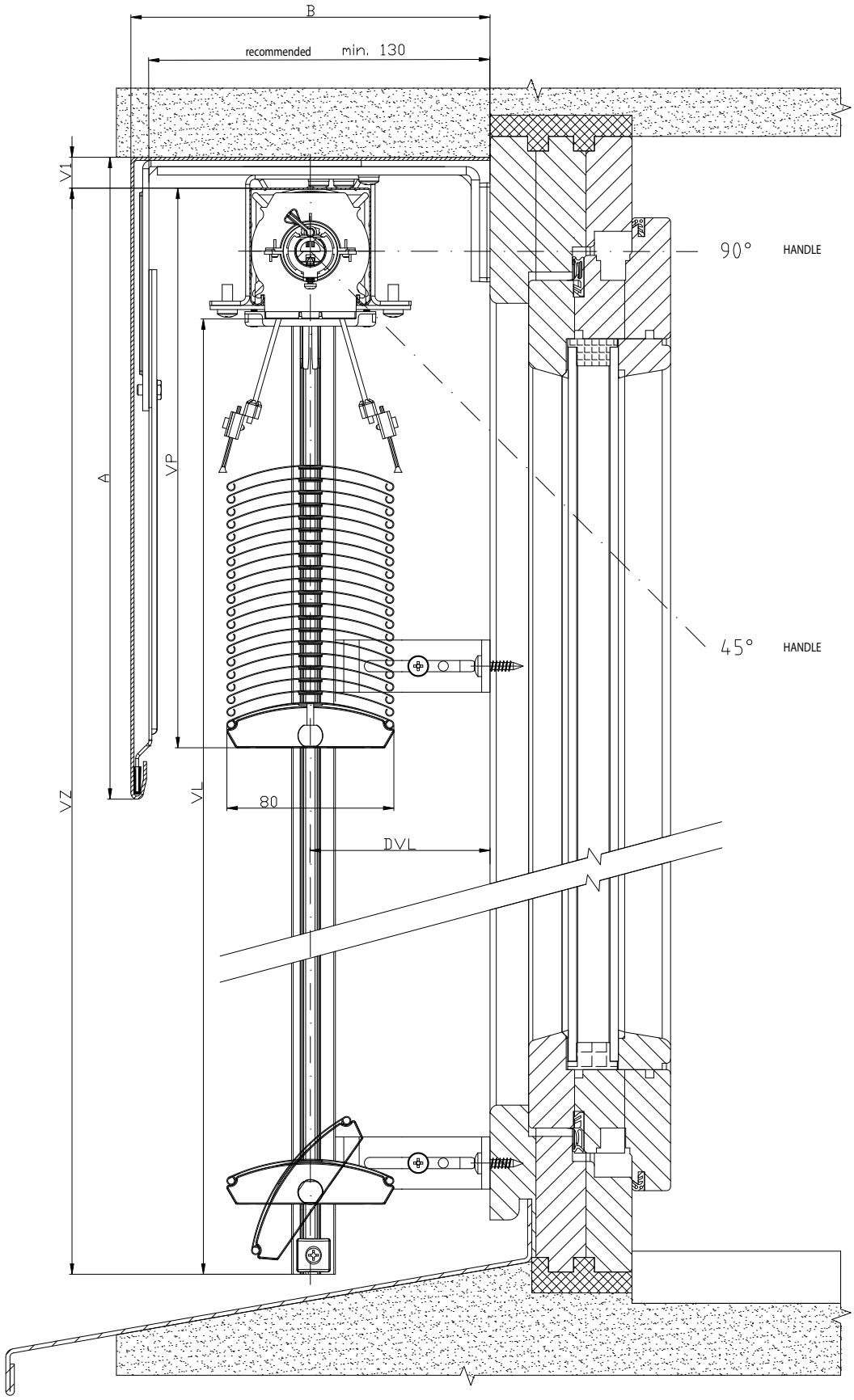

2-01825-0032-0

CETTA 80, CETTA 65 EXTERIOR BLIND DIAGRAM

HORIZONTAL SECTION HANDLE CONTROL

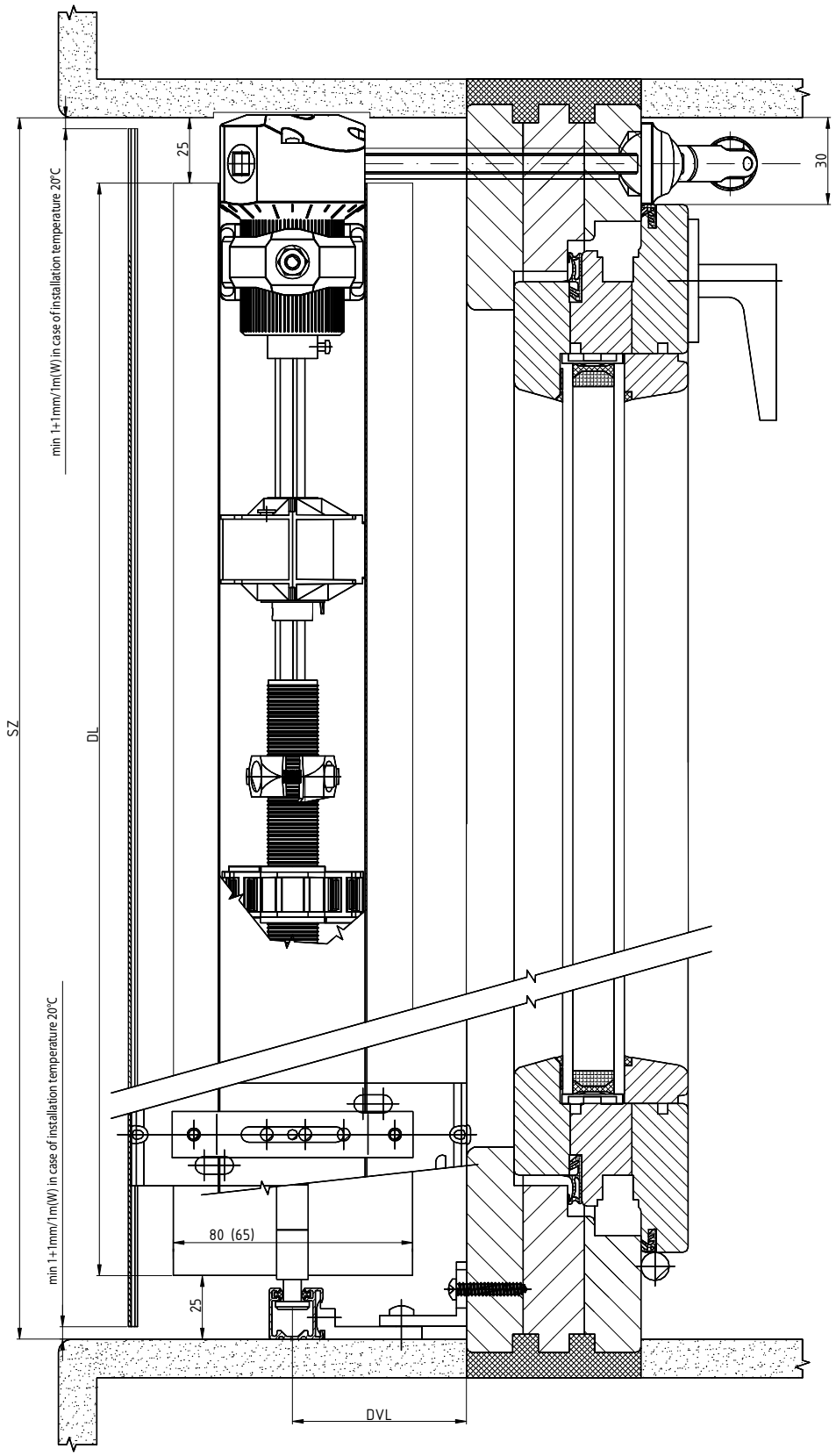

2-01825-0078-0

CETTA 65 EXTERIOR BLIND DIAGRAM

VERICAL SECTION HANDLE CONTROL

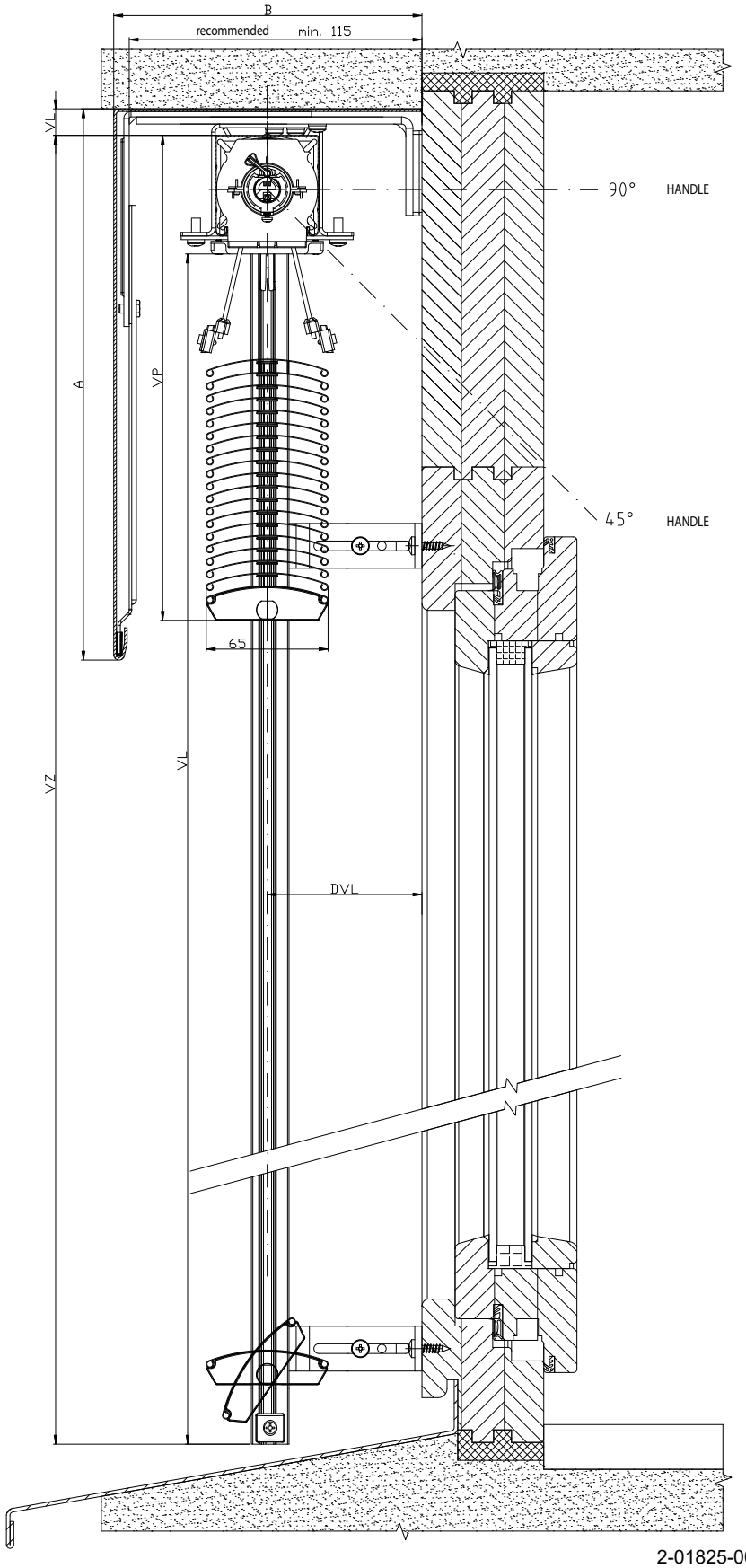

2-01825-0018-0

CETTA 80 EXTERIOR BLIND DIAGRAM

VERICAL SECTION HANDLE CONTROL

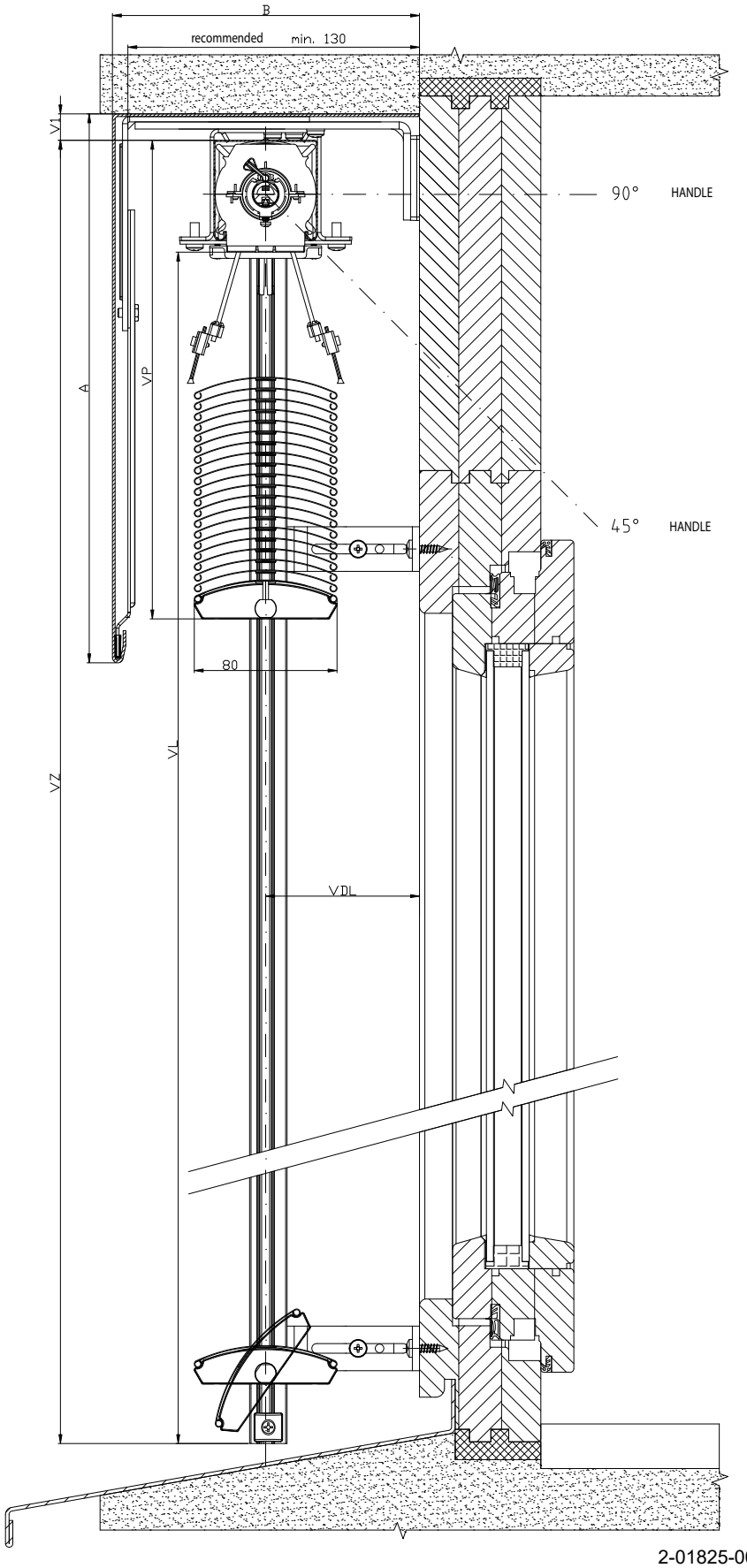

2-01825-0034-0

CETTA 60 - FLEXI EXTERIOR BLIND DIAGRAM

VERTICAL SECTION MOTOR CONTROL

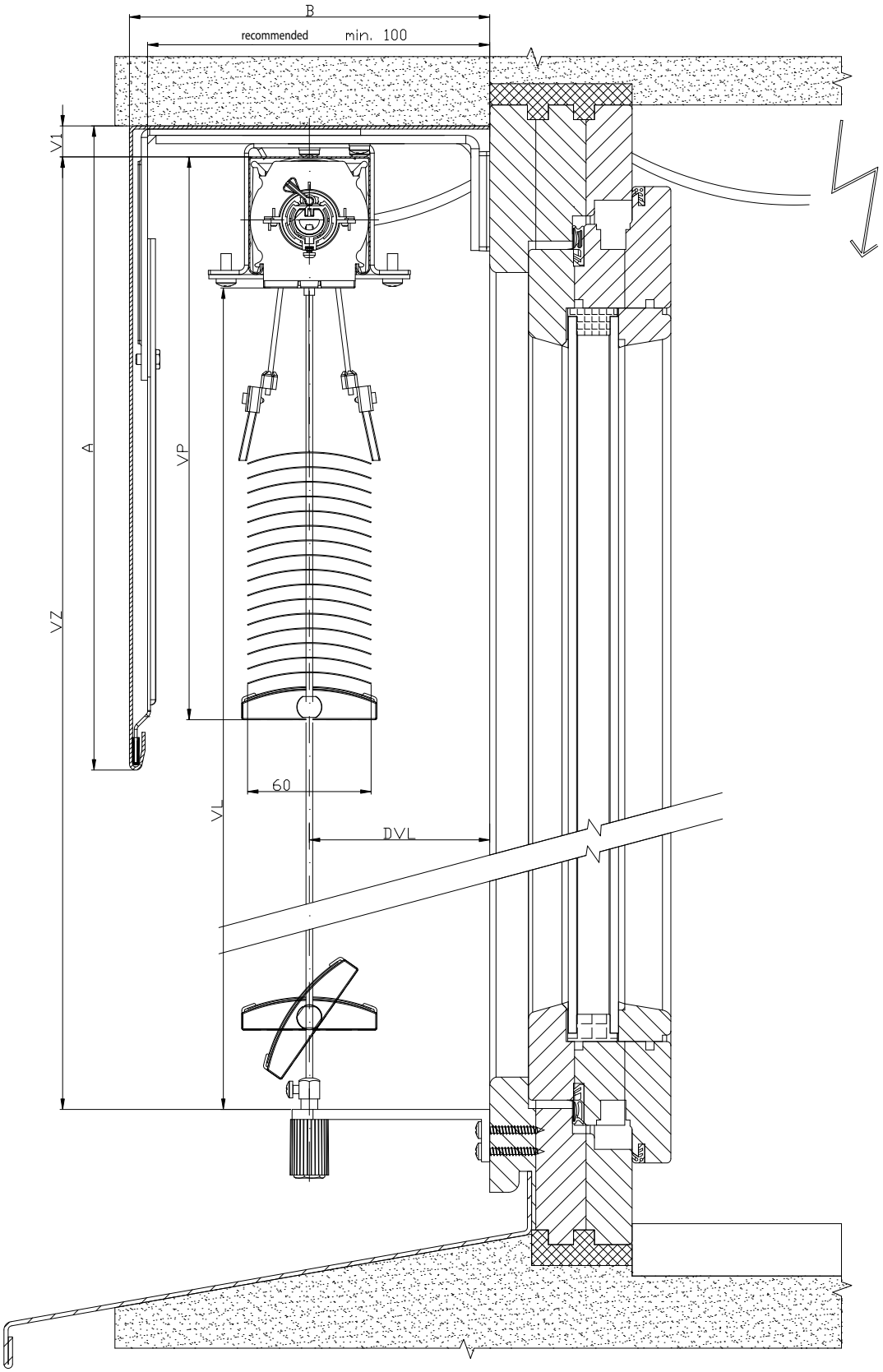

2-01825-0005-0

CETTA 60 - FLEXI EXTERIOR BLIND DIAGRAM

VERTICAL SECTION HANDLE CONTROL

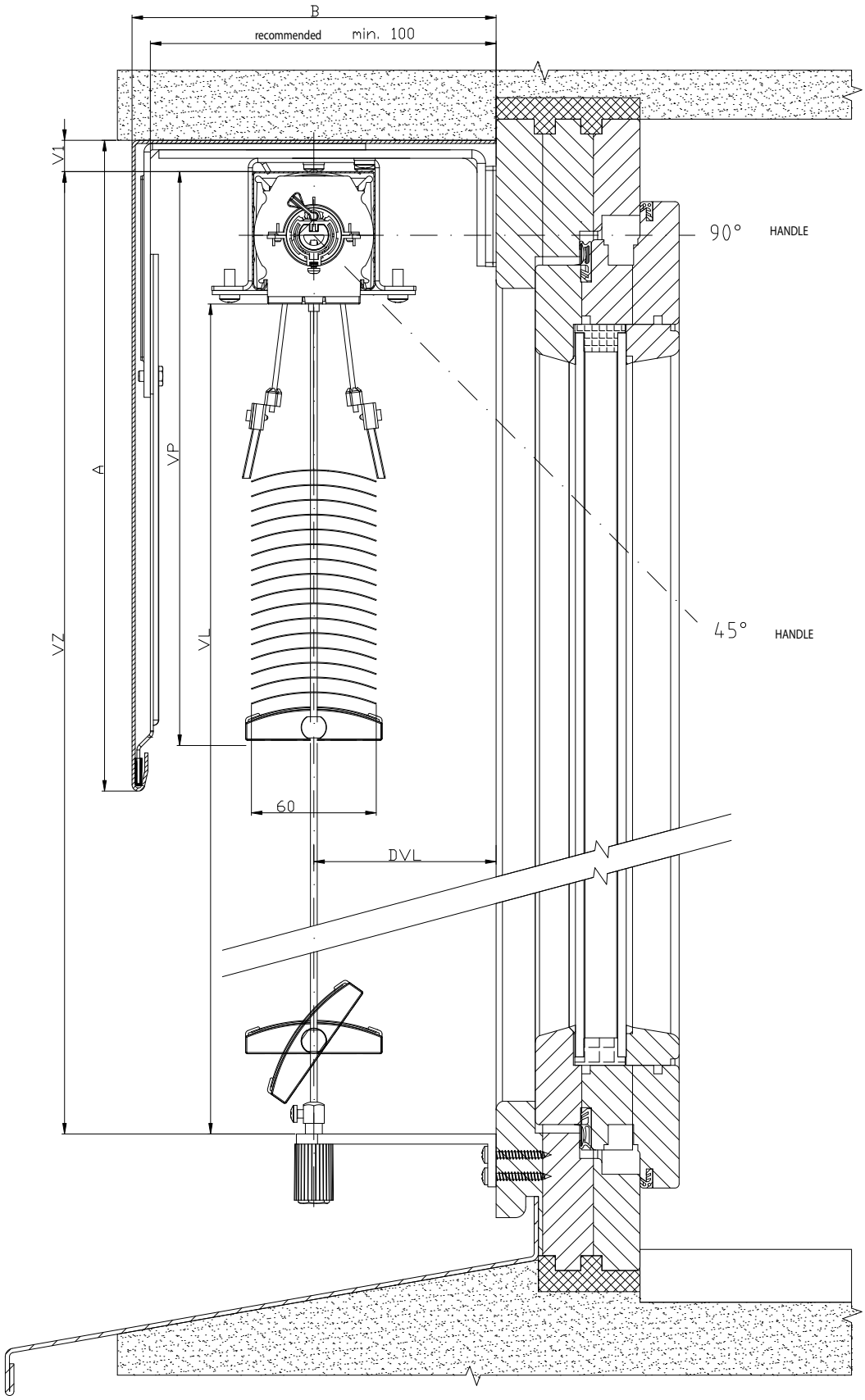

2-01825-0004-0

CETTA 60 - FLEXI EXTERIOR BLIND DIAGRAM

VERTICAL SECTION MOTOR CONTROL

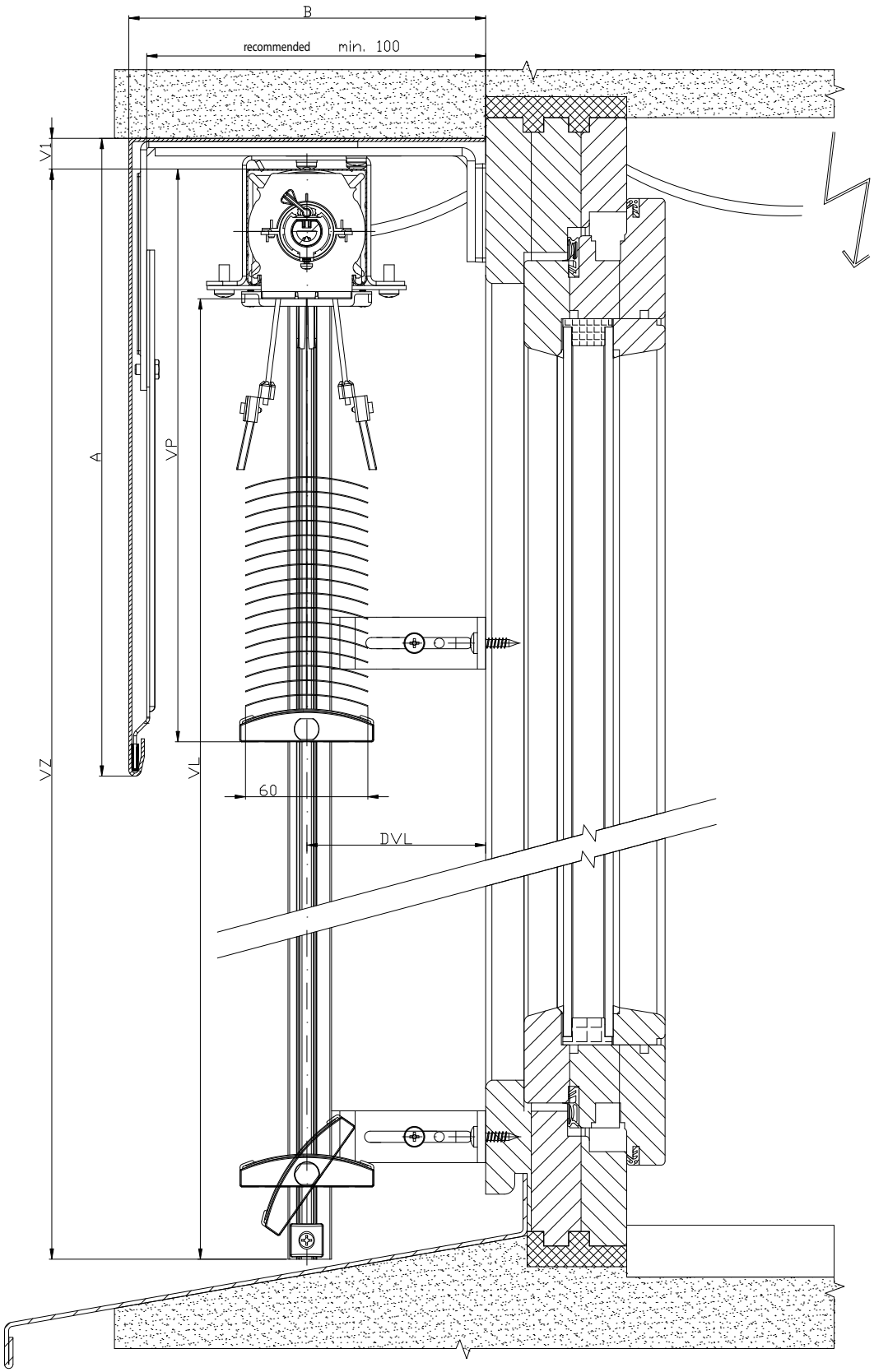

2-01825-0009-0

CETTA 60 - FLEXI EXTERIOR BLIND DIAGRAM

VERTICAL SECTION HANDLE CONTROL

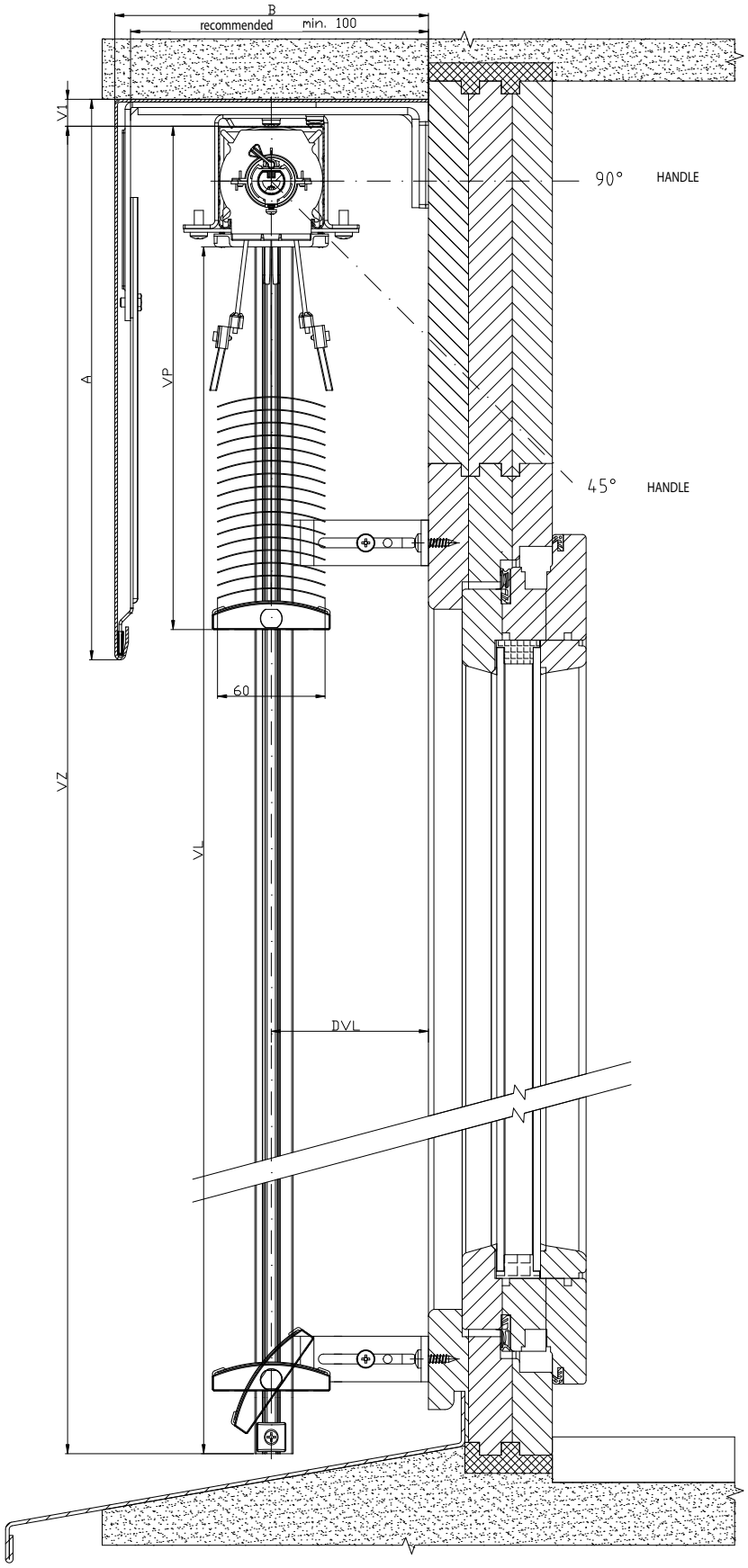

2-01825-0010-0

CETTA 80 - FLEXI EXTERIOR BLIND DIAGRAM

VERTICAL SECTION MOTOR CONTROL

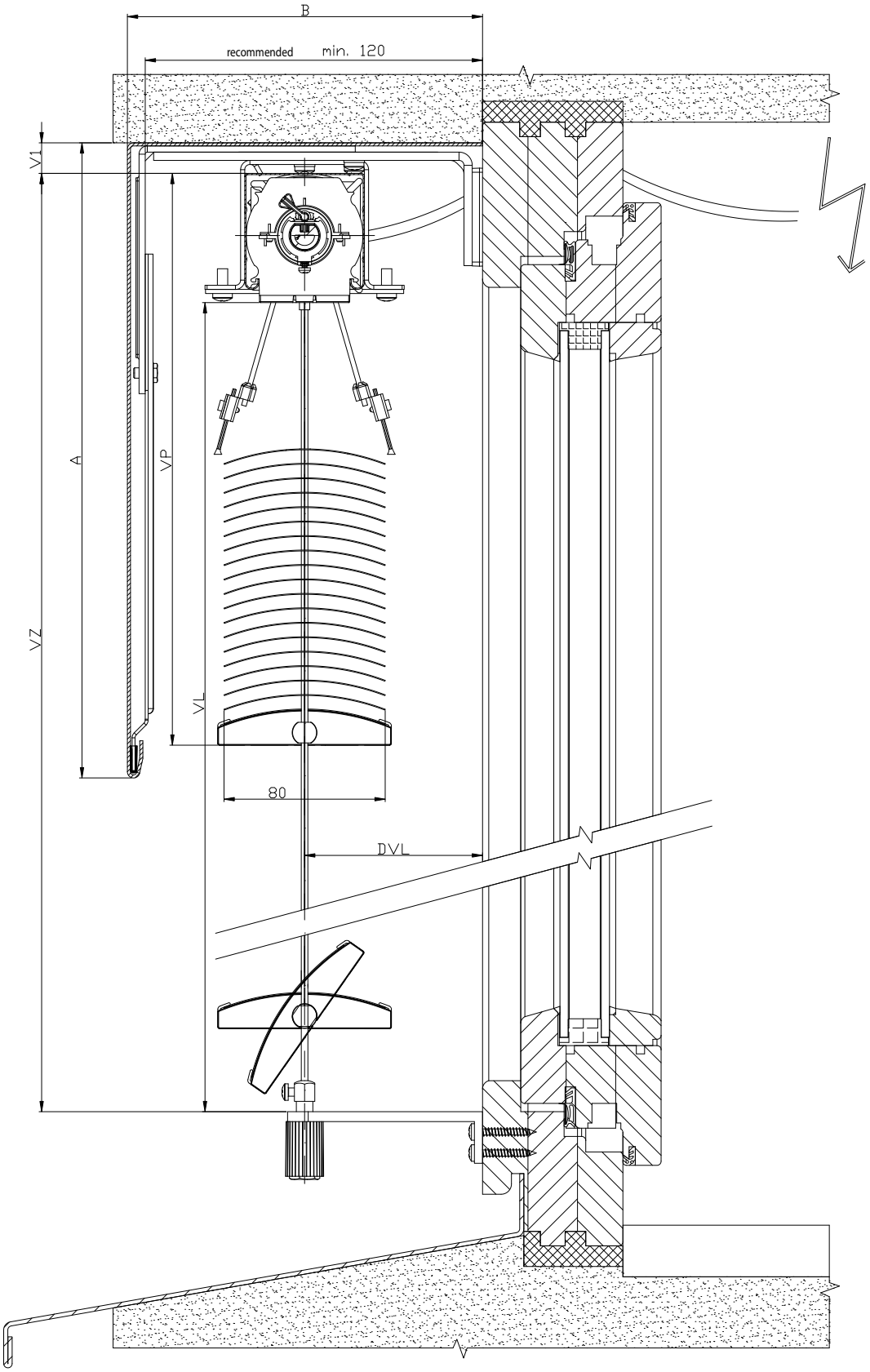

2-01825-0021-0

CETTA 80 - FLEXI EXTERIOR BLIND DIAGRAM

VERTICAL SECTION HANDLE CONTROL

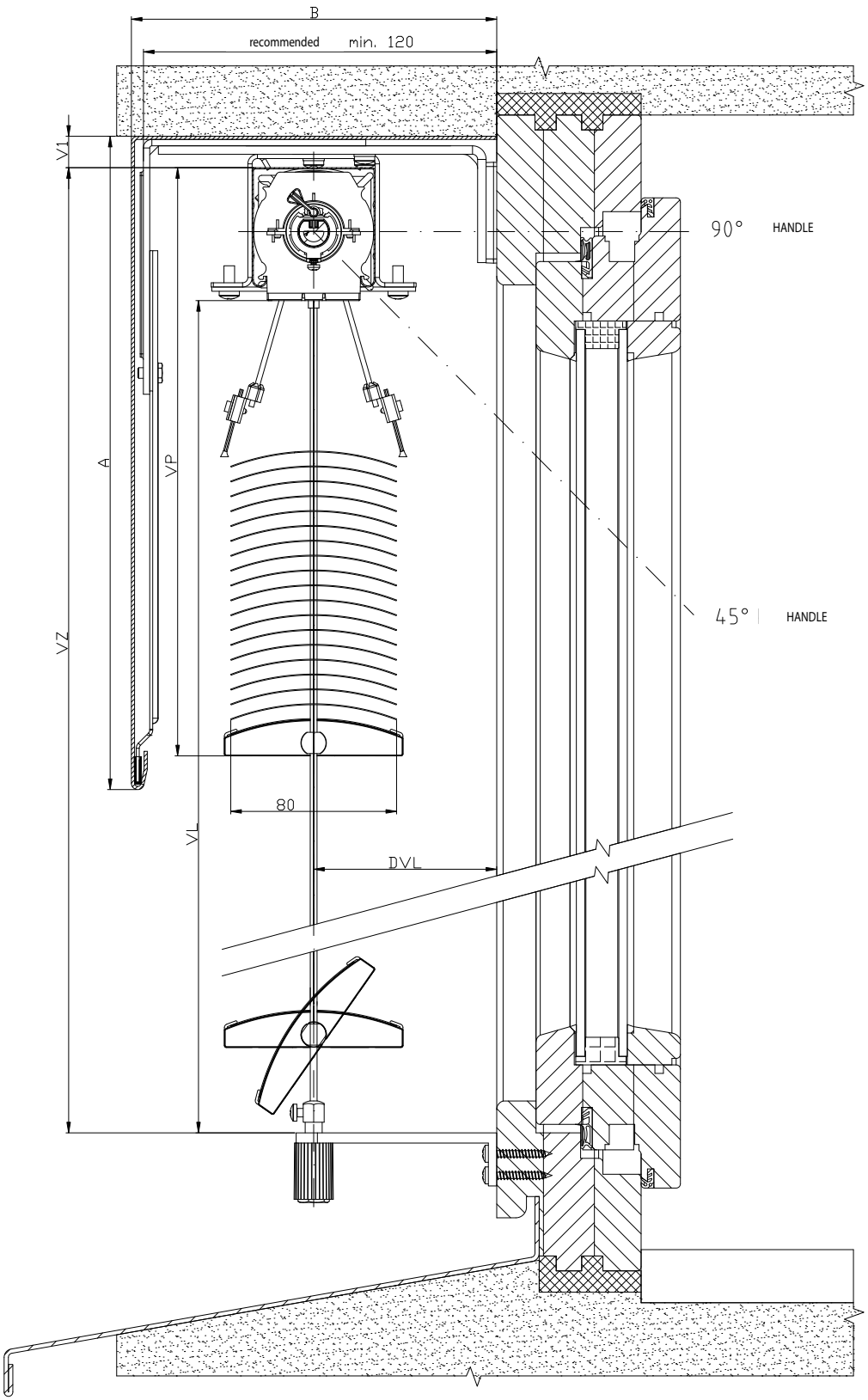

2-01825-0020-0

CETTA 80 - FLEXI EXTERIOR BLIND DIAGRAM

VERTICAL SECTION MOTOR CONTROL

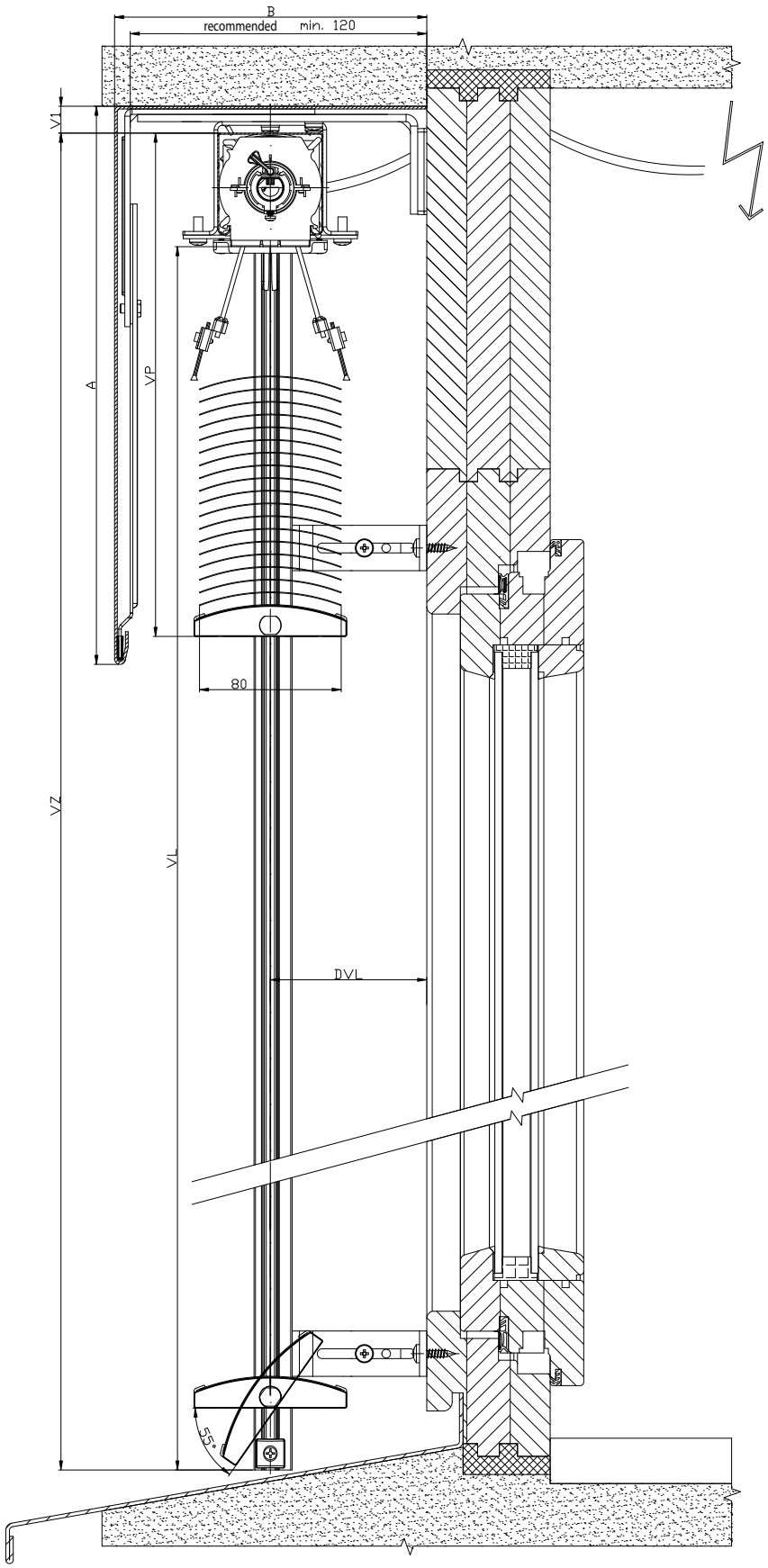

2-01825-0027-0

CETTA 80 - FLEXI EXTERIOR BLIND DIAGRAM

VERTICAL SECTION HANDLE CONTROL

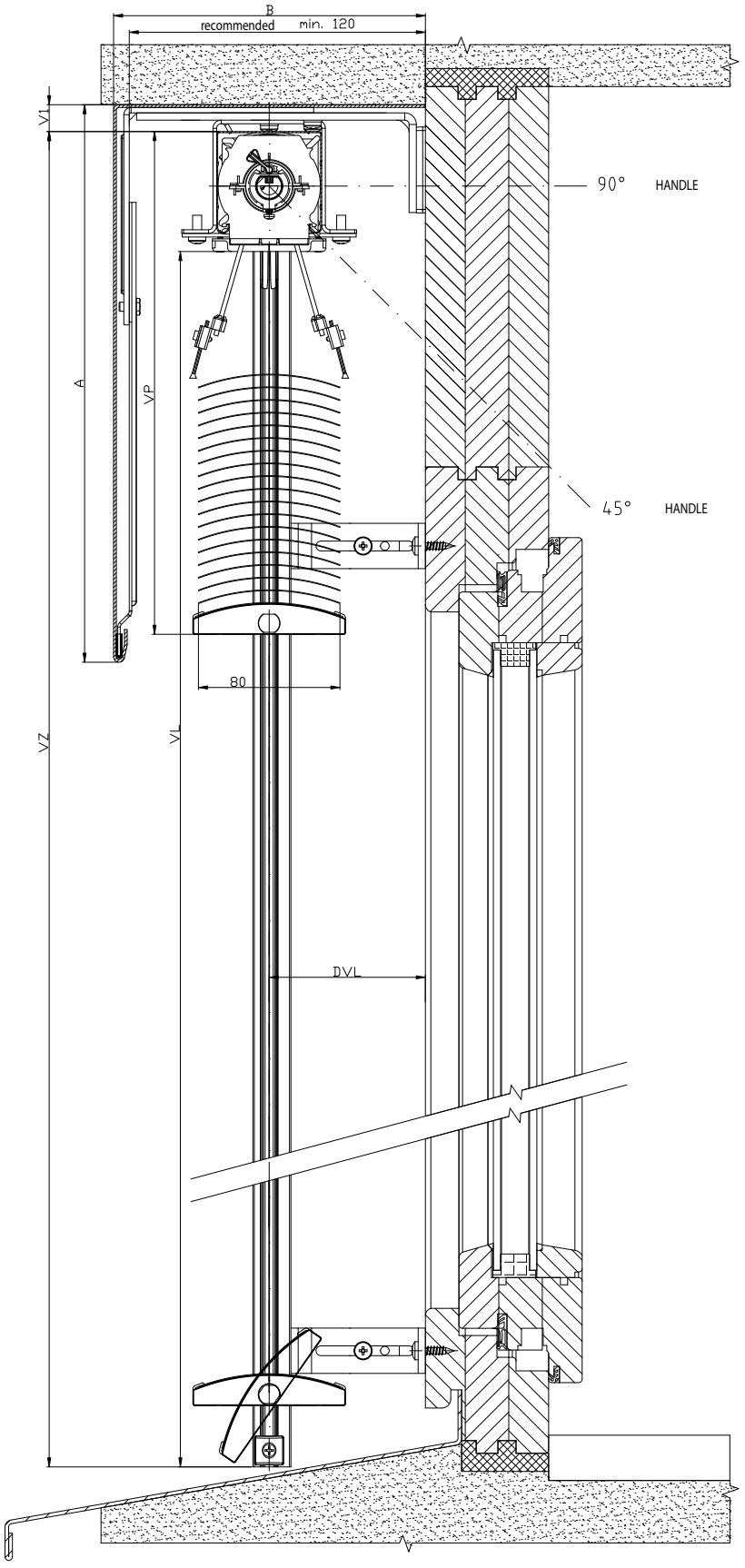

2-01825-0026-0

CETTA 100 - FLEXI EXTERIOR BLIND DIAGRAM

VERTICAL SECTION MOTOR CONTROL

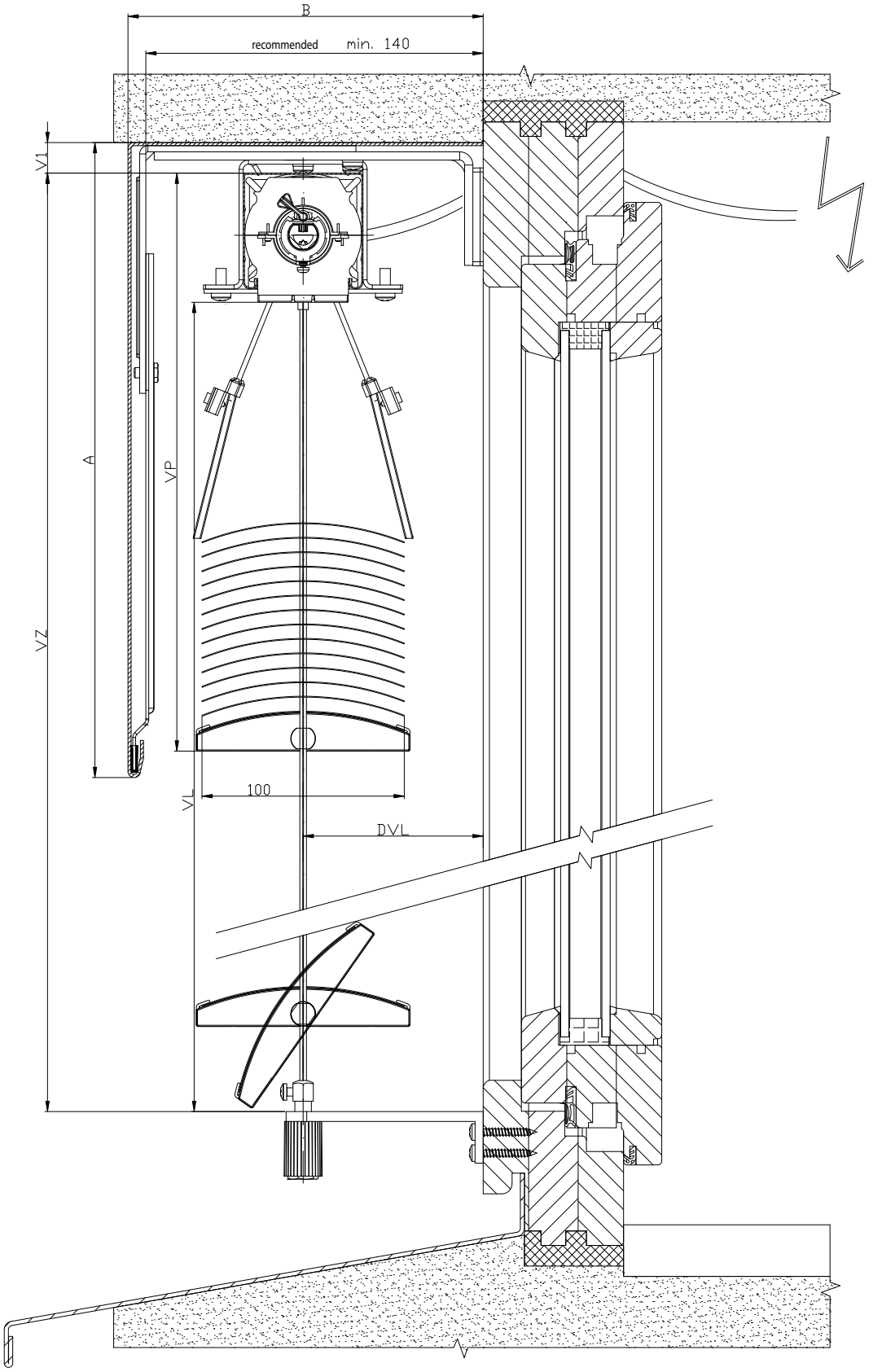

CETTA 100 - FLEXI EXTERIOR BLIND DIAGRAM

VERTICAL SECTION HANDLE CONTROL

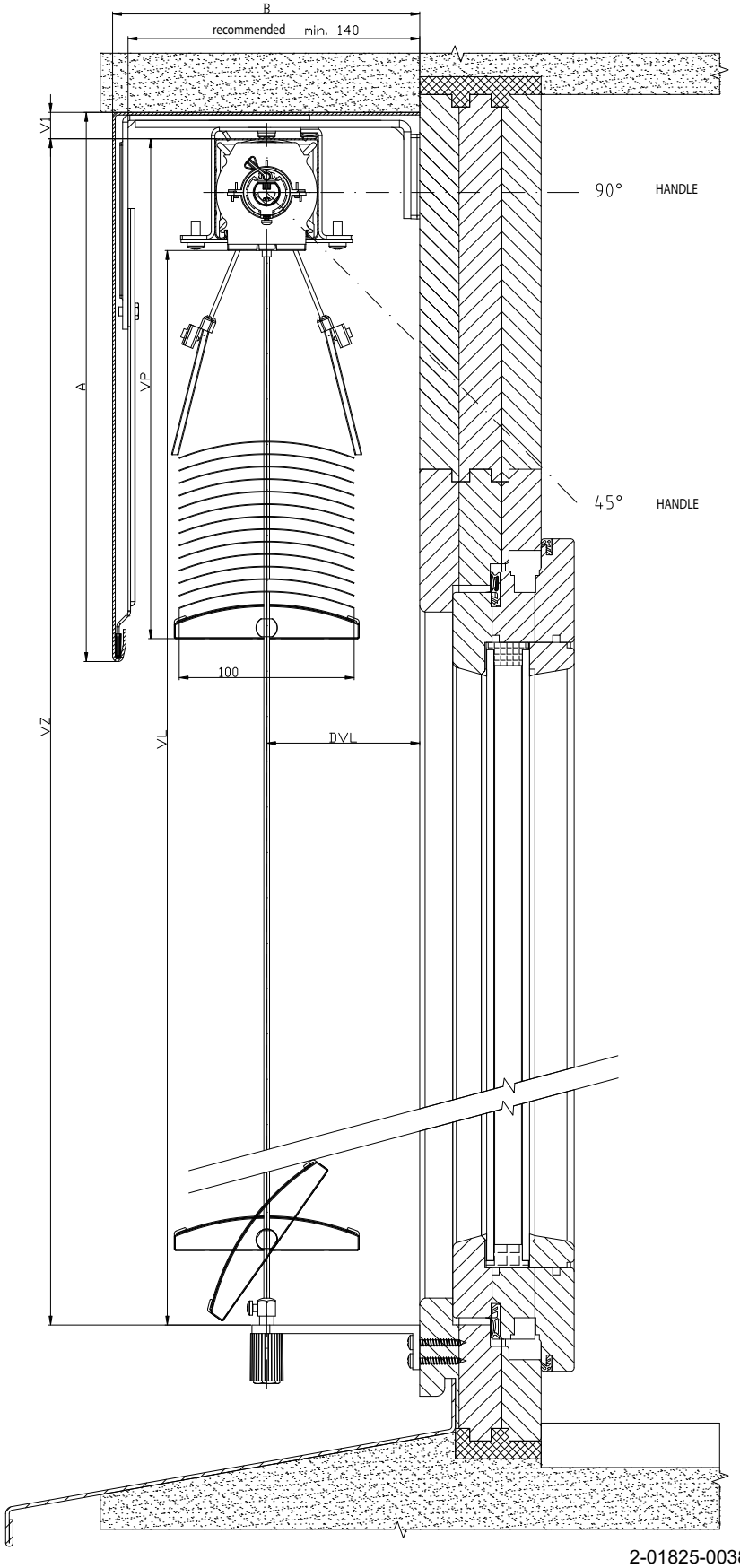

2-01825-0038-0

CETTA 100 - FLEXI EXTERIOR BLIND DIAGRAM

VERTICAL SECTION MOTOR CONTROL

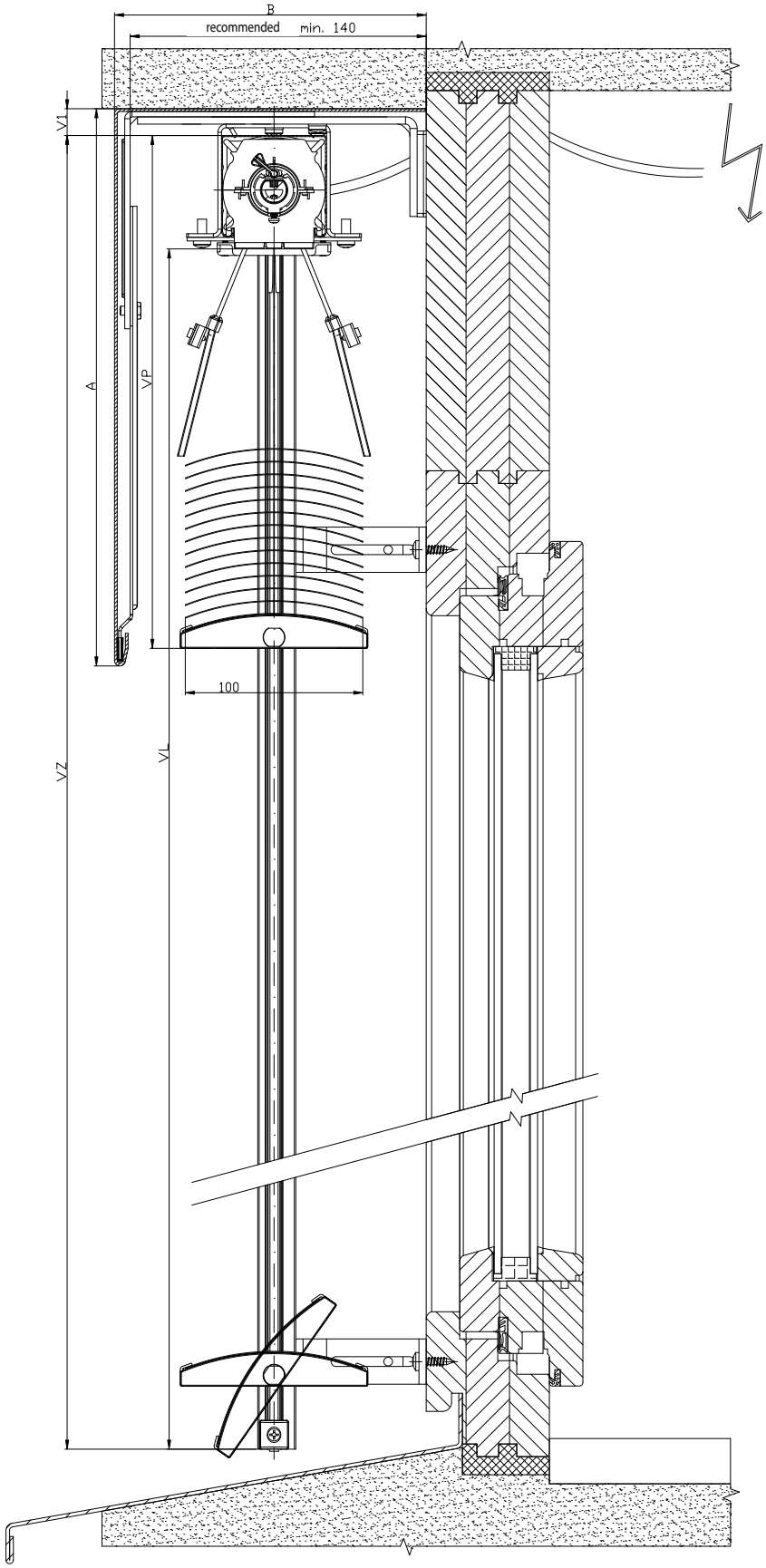

2-01825-0043-0

CETTA 100 - FLEXI EXTERIOR BLIND DIAGRAM

VERTICAL SECTION HANDLE CONTROL

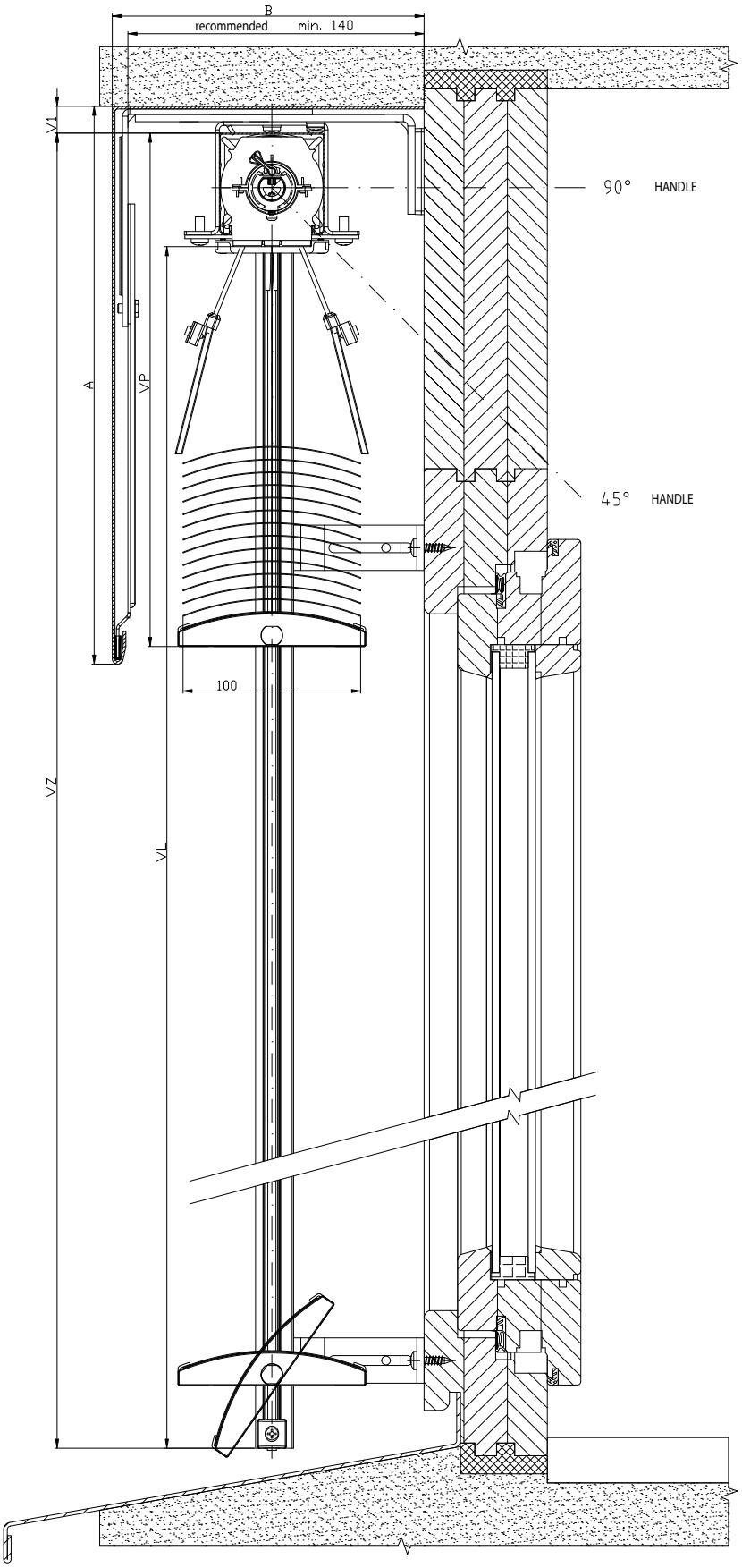

2-01825-0042-0

Setta 65, 90



SLAT SHAPE



- Elegant slat shape „S“
- Bottom rail made of extruded aluminium
- Electrical control option
- Excellent thermo-regulating effect
- Rubber pressed in along the entire slat width

ISOTRA *Quality*

Setta 65, 90 - Handle

Basic Product Specification

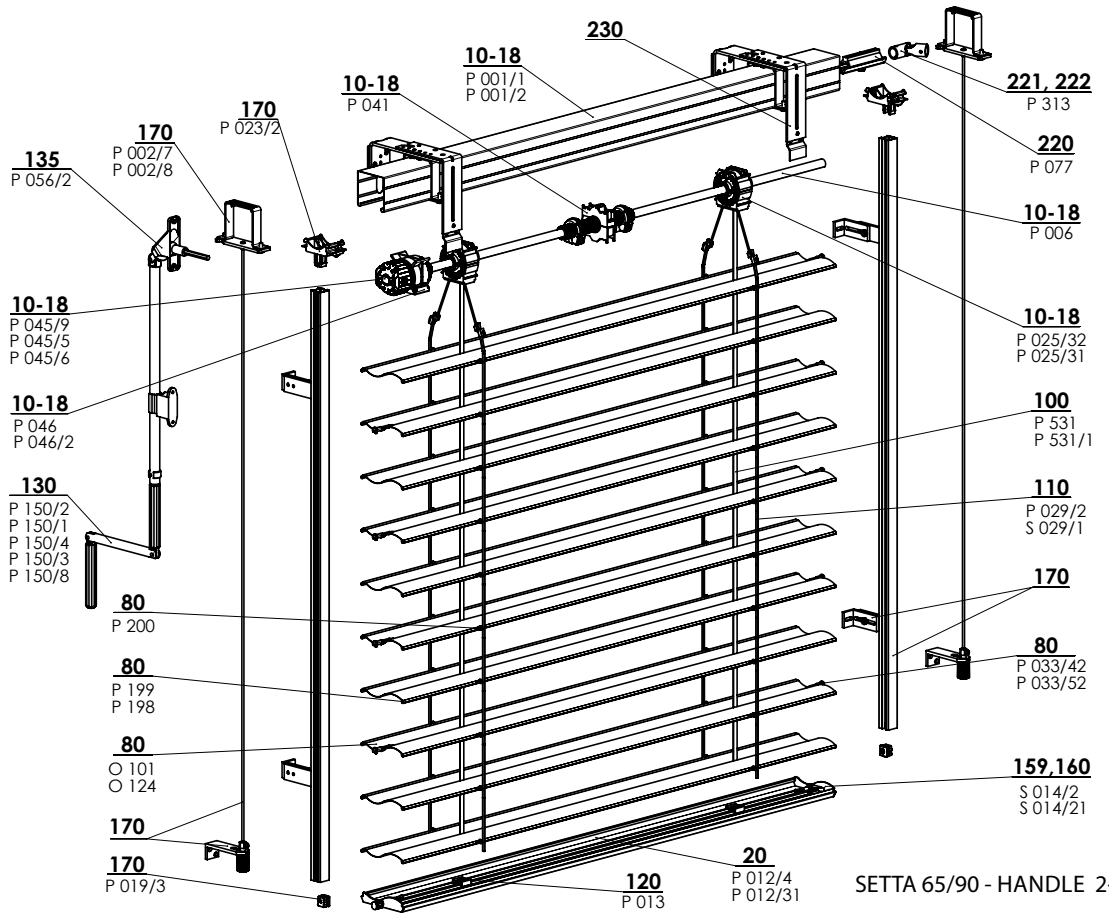

Specification Setta 65

	Head Rail		Bottom Rail	Slat	Side Guidance		Ladder	Textile Band	Assembly
					Guiding Channel	Wire			
Commercial Name **Dimension (mm)** **Material**	P 001 56 x 58 Fe	P 001/2 58 x 60 Al	P 012/4 67 x 13 Al	S 037 0,42 x 83 Al	See Chapter "Guidance" for guiding channel alternatives	P 036 Ø 3,2 Fe/PVC	P 029/2 60 x 9,5 PES	P 531, P531/1 6 x 0,28 PES P 028 P 028 9004 8x0,34	See Chapter "Assembly"
Color	Standard: galvanized steel plate natural (Al profil) Other RAL colors sprayed, DECORAL*		Standard: anodized aluminum Other RAL colors sprayed, DECORAL*	According to current ISOTRA a.s. scheme	Standard: anodized Other RAL colors sprayed, DECORAL*	grey black	grey black	grey black	

Specification Setta 90

	Head Rail		Bottom Rail	Slat	Side Guidance		Ladder	Textile Band	Assembly
					Guiding Channel	Wire			
Commercial Name **Dimension (mm)** **Material**	P 001 56 x 58 Fe	P 001/2 58 x 60 Al	P 012/31 93 x 14 Al	S 039 0,42 x 113 Al	See Chapter "Guidance" for guiding channel alternatives	P 036 Ø 3,2 Fe/PVC	S029/1 86 x 9,5 PES	P 531, P531/1 6 x 0,28 PES P 028 P 028 9004 8x0,34	See Chapter "Assembly"
Color	Standard: galvanized steel plate natural (Al profil) Other RAL colors sprayed, DECORAL*		Standard: anodized aluminum Other RAL colors sprayed, DECORAL*	According to current ISOTRA a.s. scheme	Standard: anodized Other RAL colors sprayed, DECORAL*	grey black	grey black	grey black	

*Maximum dimension 4000mm.

We do not make atypical designs.

Standard Dimensions

Width (mm)		Height (mm)		Guaranteed Area (m^2)
min.	max.	min.	max.	max.
600	6000*	500	4000	8 (Handle control)

* Note: The wider the blind, the lower its wind resistace class - see "Wind resistance of exterior blinds", page 3-6.

Setta 65,90 - handle (2-00812-XXXX)

Position	Item name	Business name - Abbreviation 2	Order number - Abbreviation 1
10-18	Head rail Fe	P 001/1	3-00166-PU22
10-18	Upper head rail	P 001/2	7-301180-0000
10-18	Bearing Z90/S90	P 025/62	2-01811-9004
10-18	Bearing Z90 / S90	P 025/32	2-01099-9004
10-18	Shaft	P 006	7-300198-0000
10-18	End stop 56x58	P 041	2-00048-9004
10-18	Gearing	P 045/9	6-010260-0000
10-18	Plastic gearing 8-mm square	P 045/5	6-013232-0000
10-18	Plastic gearing 6-mm hexagonal	P 045/6	6-013233-0000
20	Bottom rail profile Z 90 and S90 raw/elox	P012/31	7-303928-XXXX
20	Bottom rail profile S65 elox	P 012/4	7-301895-PU52
80	**Aluminium slat**		**see Slats**
80	Slat rubber Z70 - grey	P 199	7-301334-XXXX
80	Slat rubber Z90 - grey	P 198	7-301335-XXXX
80	Connecting hook	P 200	6-001206-0000
80	End guidance for slat "Z" L+R	P 033/42	3-03968-xxxx
80	End guidance for slat "Z" L+R metal	P 033/52	3-03965-PU19
80	Metal end guidance for slat "Z" left+right	P 033/33	7-302174-PU19
100	Textile band 8x0,34mm - grey/black	P 028	6-001157-xxxx
100	Textile band 6x0,28 mm	P 531	6-001284-9006
100	Textile band 6x0,28mm-black	P 531/1	6-012700-9004
110	Ladder Z70 60/9,5 - grey/black	P 029/2	6-001159-XXXX
110	Ladder S90 86/9,5 - grey/black	S 029/1	6-011065-XXXX
120	Textile band holder	P 013	2-00039-0000
130	Complete handle hexagonal (45°/90°)	P 150/1	2-00298-0000
130	Complete handle removable square 90°	P 150/4	2-00581-0000
130	Complete handle with cardan square 90°	P 150/3	2-00300-0000
130	Complete handle without bushing	P 150/8	2-01302-0000
135	Bushing 90° white SQ 8x250 (23x85 mm)	P 056/2	6-006684-XXXX
159,160	End lock S 65 left+right	S 014/2	2-00697-XXXX
159,160	End lock S90 left+right	S 014/21	2-01116-XXXX
170	**Guidance - wire/guiding channel + holder**		**see Guidance**
170	Upper head rail hanger - Fe PROFILE WINDSTABIL	P 002/7	2-01128-0000
170	Upper head rail hanger – Al PROFILE WINDSTABIL	P 002/8	2-01294-0000
170	Locking hanger of guiding channel	P 023/1	3-02758-9004
220	Shaft coupling	P 077	6-001198-0000
221	Joint coupling of shaft C 65/80 and Z70/90	P 313	6-003075-0000
222	Gearing corner, D-46mm	P 517/46	6-017225-0000
230	**Holders for exterior blinds**		**see Holders**

Setta 65, 90 - motor

Basic Product Specification

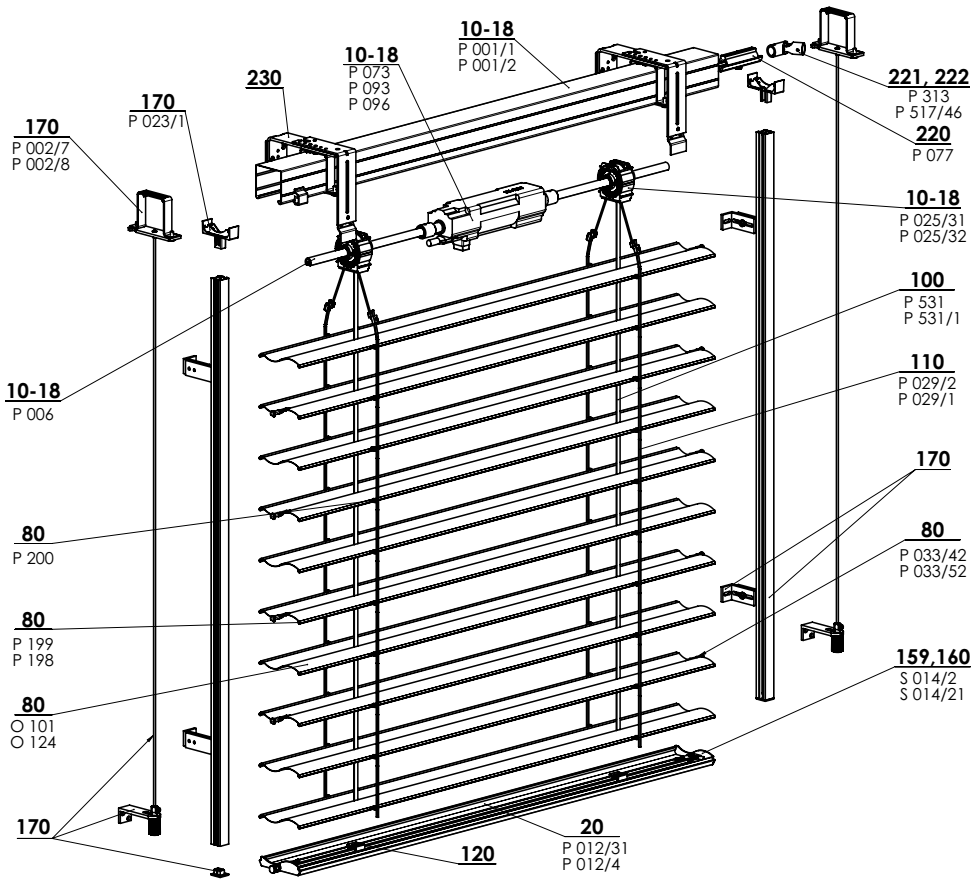

SETTA 65/90 - MOTOR 2-00813-XXXX-B

Specification Setta 65

	Head Rail		Bottom Rail	Slat	Side Guidance		Ladder	Textile Band	Assembly
					Guiding Channel	Wire			
Commercial Name **Dimension (mm)** **Material**	P 001 56 x 58 Fe	P 001/2 58 x 60 Al	P 012/4 67 x 13 Al	S 039 0,42 x 83 Al	See Chapter "Guidance" for guiding channel alternatives	P 036 Ø 3,2 Fe/PVC	P 029/2 60 x 9,5 PES	P 531, P531/1 6 x 0,28 PES P 028 P 028 9004 8x0,34	See Chapter "Assembly"
Color	Standard: galvanized steel plate natural (Al profil) Other RAL colors sprayed		Standard: anodized aluminum Other RAL colors sprayed	According to current ISOTRA a.s. scheme	Standard: anodized Other RAL colors sprayed	grey black	grey black	grey black	

Specification Setta 90

	Head Rail		Bottom Rail	Slat	Side Guidance		Ladder	Textile Band	Assembly
					Guiding Channel	Wire			
Commercial Name **Dimension (mm)** **Material**	P 001 56 x 58 Fe	P 001/2 58 x 60 Al	P 012/31 93 x 14 Al	S 037 0,42 x 113 Al	See Chapter "Guidance" for guiding channel alternatives	P 036 Ø 3,2 Fe/PVC	S029/1 86 x 9,5 PES	P 531, P531/1 6 x 0,28 PES P 028 P 028 9004 8x0,34	See Chapter "Assembly"
Color	Standard: galvanized steel plate natural (Al profil) Other RAL colors sprayed		Standard: anodized aluminum Other RAL colors sprayed	According to current ISOTRA a.s. scheme	Standard: anodized Other RAL colors sprayed	grey black	grey black	grey black	

We do not make atypical designs.

Standard Dimensions

Width (mm)		Height (mm)		Guaranteed Area (m^2)
min.	max.	min.	max.	max.
600	6000*	500	4000	24 m^2

* Note: The wider the blind, the lower its wind resistace class - see "Wind resistance of exterior blinds", page 3-6.

Setta 65,90 - motor (2-00813-XXXX)

Position	Item name	Business name - Abbreviation 2	Order number - Abbreviation 1
10-18	Head rail Fe	P 001/1	3-00166-PU22
10-18	Upper head rail	P 001/2	7-301180-000
10-18	Bearing Z90/S90	P 025/62	2-01811-9004
10-18	Bearing Z90/S90	P 025/32	2-01099-9004
10-18	Shaft	P 006	7-300198-0000
10-18	Motors (ELERO)	P 096	2-00648-0000
10-18	Motors (SOMFY)	P 073	2-00512-0000
10-18	Motors (GEIGER)	P 093	2-00572-0000
20	Bottom rail profile Z 90 a S90 raw/elox	P012/31	7-303928-XXXX
20	Bottom rail profile S65 elox	P 012/4	7-301895-PU52
80	**Aluminium slat**		**see Slats**
80	Slat rubber Z70 - grey / black	P 199	7-301334-XXXX
80	Slat rubber Z90 - grey / black	P 198	7-301335-XXXX
80	Connecting hook	P 200	6-001206-0000
80	End guidance for slat "Z" L+R	P 033/42	3-03968-xxxx
80	End guidance for slat "Z" L+R metal	P 033/52	3-03965-PU19
80	Metal end guidance pro lamelu "Z" left+right	P 033/33	7-302174-PU19
100	Textile band 8x0,34mm - grey/black	P 028	6-001157-xxxx
100	Textile band 6x0,28 mm	P 531	6-001284-9006
100	Textile band 6x0,28mm-black	P 531/1	6-012700-9004
110	Ladder Z70 60/9,5 - grey/black	P 029/2	6-001159-XXXX
110	Ladder S90 86/9,5 - grey/black	S 029/1	6-011065-XXXX
120	Textile band holder	P 013	2-00039-0000
159,160	End lock S 65 left+right	S 014/2	2-00697-XXXX
159,160	End lock S90 left+right	S 014/21	2-01116-XXXX
170	**Guidance - wire/guiding channel + holder**		**see Guidance**
170	Upper head rail hanger - Fe PROFILE WINDSTABIL	P 002/7	2-01128-0000
170	Upper head rail hanger – Al PROFILE WINDSTABIL	P 002/8	2-01294-0000
170	Locking hanger of guiding channel	P 023/1	3-02758-9004
220	Shaft coupling	P 077	6-001198-0000
221	Joint coupling of shaft C 65/80 and Z70/90	P 313	6-003075-0000
222	Gearing corner, D-46mm	P 517/46	6-017225-0000
230	**Holders for exterior blinds**		**see Holders**

SETTA 65 EXTERIOR BLIND DIAGRAM

VERTICAL SECTION **HANDLE CONTROL**

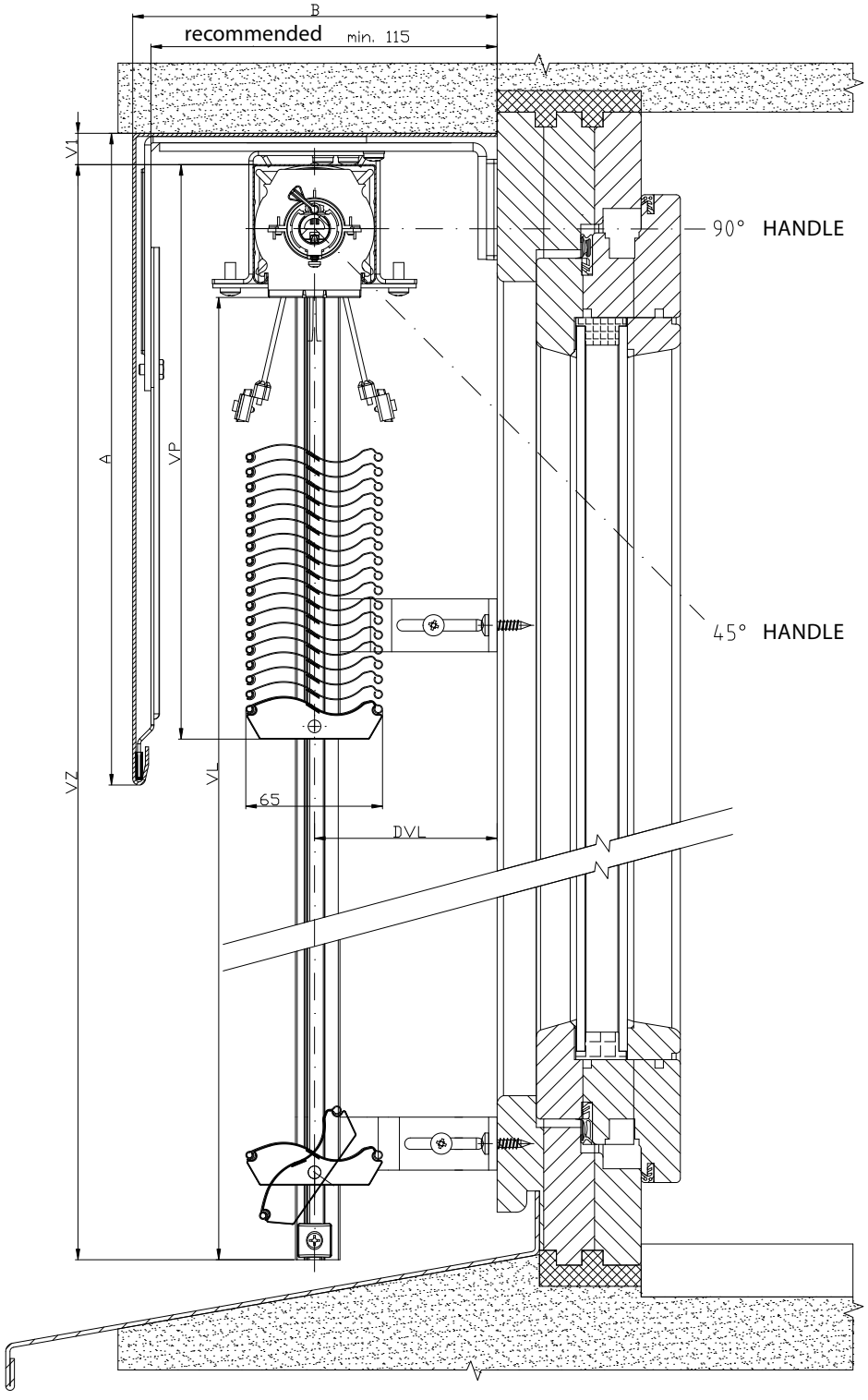

2-01825-0048-0

SETTA 65 EXTERIOR BLIND DIAGRAM

VERTICAL SECTION HANDLE CONTROL

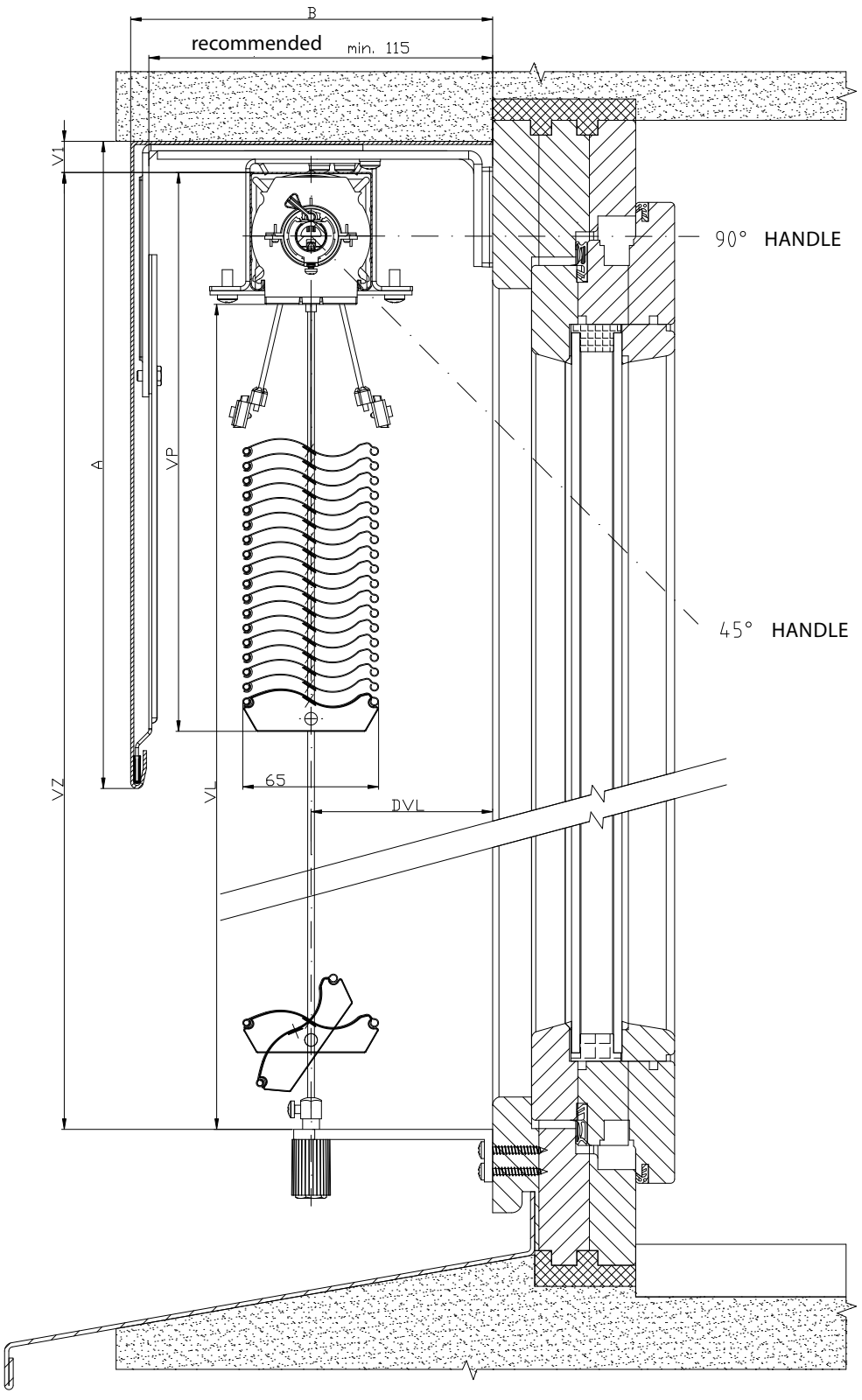

SETTA 65 EXTERIOR BLIND DIAGRAM

VERTICAL SECTION **MOTOR CONTROL**

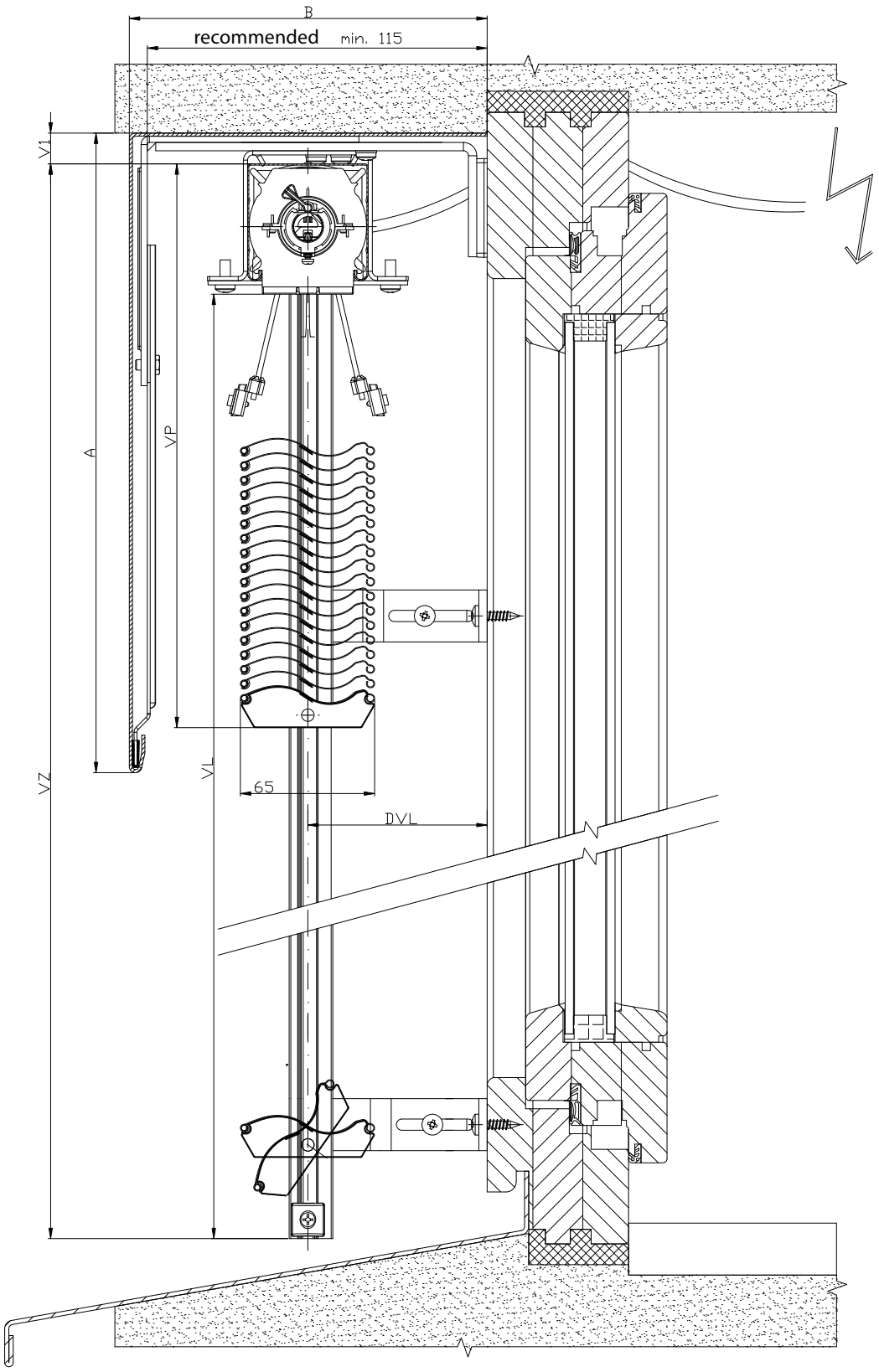

2-01825-0049-0

SETTA 65 EXTERIOR BLIND DIAGRAM

VERTICAL SECTION **MOTOR CONTROL**

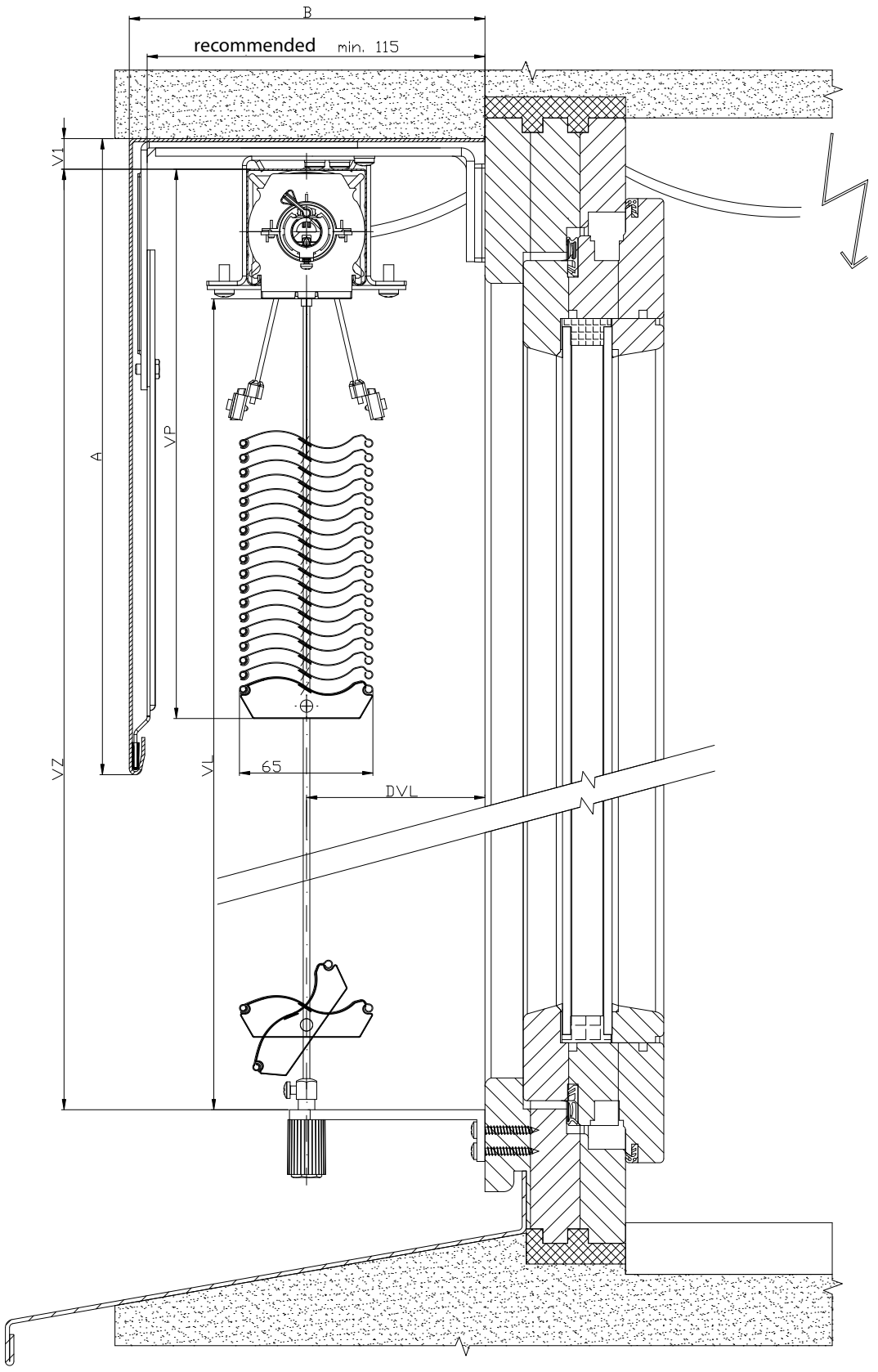

SETTA 90/65 EXTERIOR BLIND DIAGRAM

HORIZONTAL SECTION **MOTOR CONTROL**

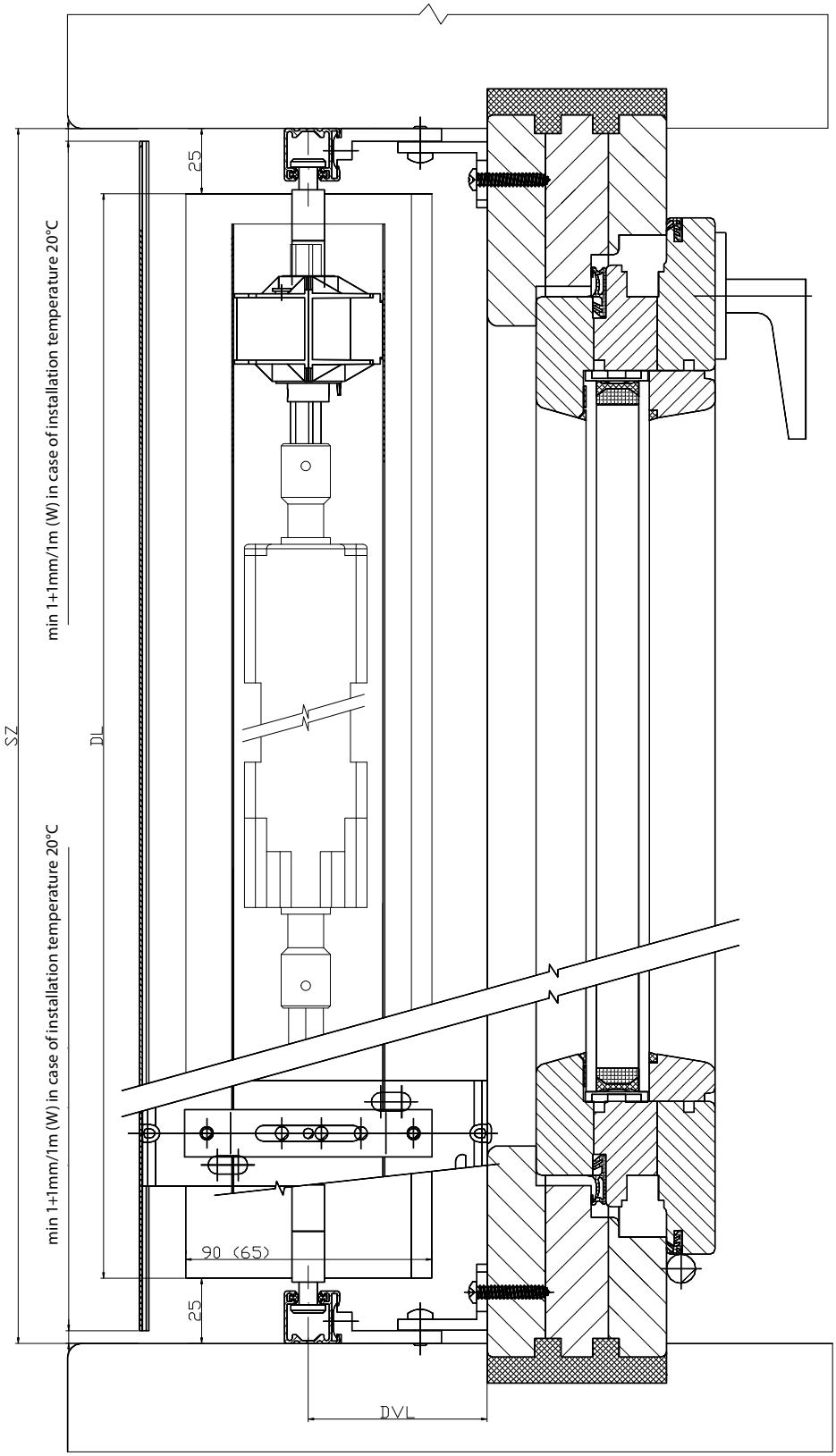

2-01825-0081-0

Zetta 70, 90



SLAT SHAPE

- High degree of shading
- Thermo-regulating and protecting effect
- Outside noise level reduction
- Bottom rail made of extruded aluminum
- Electrical control option
- Rubber pressed in along the entire slat width

ISOTRA Quality

Zetta 70, 90 - Handle

Basic Product Specification

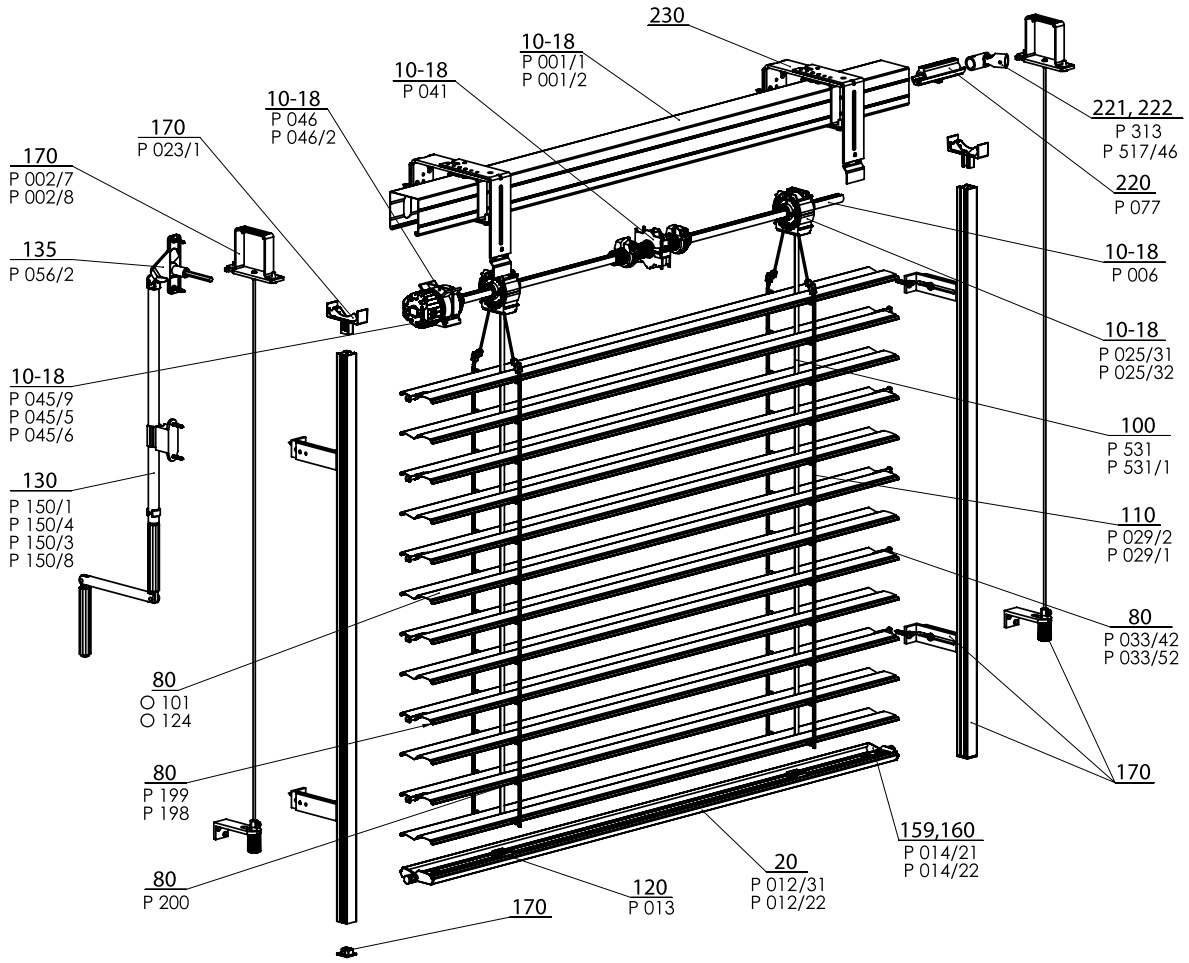

ZETTA 70/90 - HANDLE 2-00157-XXXX-G

Specification Zetta 70

	Head Rail		Bottom Rail	Slat	Side Guidance		Ladder	Textile Band	Assembly
					Guiding Channel	Wire			
Commercial Name **Dimension (mm)** **Material**	P 001 56 x 58 Fe	P 001/2 58 x 60 Al	P 012/22 67 x 13 Al	P 038 0,42 x 83 Al	See Chapter "Guidance" for guiding channel alternatives	P 036 Ø 3,2 Fe/PVC	P 029/2 60 x 9,5 PES	P 531, P531/1 6 x 0,28 PES P 028 P 028 9004 8x0,34	See Chapter "Assembly"
Color	Standard: galvanized steel plate natural (Al profil) Other RAL colors sprayed, DECORAL*		Standard: anodized aluminum Other RAL colors sprayed, DECORAL*	According to current ISOTRA a.s. scheme	Standard: anodized Other RAL colors sprayed, DECORAL*	grey black	grey black	grey black	

Specification Zetta 90

	Head Rail		Bottom Rail		Slat	Side Guidance		Ladder	Textile Band	Assembly
						Guiding Channel	Wire			
Commercial Name **Dimension (mm)** **Material**	P 001 56 x 58 Fe	P 001/2 58 x 60 Al	P 012/31 93,4 x 17,1 Al	P 012/35 93,4 x 17,1 Al	P 037 0,42 x 113 Al	See Chapter "Guidance" for guiding channel alternatives	P 036 Ø 3,2 Fe/PVC	P 029/1 80 x 9,5 PES	P 531, P531/1 6 x 0,28 PES P 028 P 028 9004 8x0,34	See Chapter "Assembly"
Color	Standard: galvanized steel plate natural (Al profil) Other RAL colors sprayed, DECORAL*		Standard: anodized aluminum Other RAL colors sprayed, DECORAL*		According to current ISOTRA a.s. scheme	Standard: anodized Other RAL colors sprayed, DECORAL*	grey black	grey black	grey black	

*Maximum dimension 4000mm.

We do not make atypical designs.

Standard Dimensions

Minimum Width (mm)		Height (mm)		Guaranteed Area (m²)
min.	max.	min.	max.	max.
600	6000*	500	4000	8

* Note: The wider the blind, the lower its wind resistace class - see "Wind resistance of exterior blinds", page 3-6.

Zetta 70,90 - handle (2-00157-7001/9001)

Position	Item name	Business name - Abbreviation 2	Order number - Abbreviation 1
10-18	Head rail Fe	P 001/1	3-00166-PU22
10-18	Upper head rail	P 001/2	7-301180-0000
10-18	Bearing Z70, S65 8 mm	P 025/45	2-01946-9004
10-18	Bearing Z70, S65	P 025/44	2-01942-9004
10-18	Bearing Z90/S90 8 mm	P 025/62	2-01811-9004
10-18	Bearing Z90 / S90	P 025/32	2-01099-9004
10-18	Shaft	P 006	7-300198-0000
10-18	End stop 56x58	P 041	2-00048-9004
10-18	Gearing	P 045/9	6-010260-0000
10-18	Plastic gearing 8-mm square	P 045/5	6-013232-0000
10-18	Plastic gearing 6-mm hexagonal	P 045/6	6-013233-0000
10-18	Gearing holder	P 046	6-001181-0000
10-18	Gearing holder, 46 mm	P 046/2	6-013234-0000
20	Bottom rail profile Z 90 and S90 raw/elox	P012/31	7-303928-XXXX
20	Bottom rail profile C65 and Z70	P 012/22	7-302680-PU52
21	Bottom rail Z90 PREMIUM	P 012/35	7-304764-0000
80	**Slat Al**		**see Slats**
80	Slat rubber Z70 - grey	P 199	7-301334-XXXX
80	Slat rubber Z90 - grey	P 198	7-301335-XXXX
80	Connecting hook	P 200	6-001206-0000
80	End guidance for slat "Z" L+R	P 033/42	3-03968-xxxx
80	End guidance for slat "Z" L+R metal	P 033/52	3-03965-PU19
80	Double sided End guidance "Z" metal	-	3-04827-PU19
100	Textile band 8x0,34mm - grey/black	P 028	6-001157-xxxx
100	Textile band 6x0,28 mm	P 531	6-001284-9006
100	Textile band 6x0,28mm-black	P 531/1	6-012700-9004
110	Ladder Z70 60/9,5 - grey/black	P 029/2	6-001159-XXXX
110	Ladder S90 86/9,5 - grey/black	P 029/1	6-011065-XXXX
120	Textile band holder	P 013	2-00039-0000
130	Complete handle hexagonal (45°/90°)	P 150/1	2-00298-0000
130	Complete handle removable square 90°	P 150/4	2-00581-0000
130	Complete handle with cardan square 90°	P 150/3	2-00300-0000
130	Complete handle without bushing	P 150/8	2-01302-0000
135	Bushing 90° white SQ 8x250 (23x85 mm)	P 056/2	6-006684-XXXX
159,16	End lock Z70 left+right	P 014/22	2-01117-XXXX
159,16	End lock S90 left+right	P 014/21	2-01116-XXXX
170	**Guidance - wire/guiding channel + holder**		**see Guidance**
170	Upper head rail hanger - Fe PROFILE WINDSTABIL	P 002/7	2-01128-0000
170	Upper head rail hanger – Al PROFILE WINDSTABIL	P 002/8	2-01294-0000
170	Locking hanger of guiding channel	P 023/1	3-02758-9004
220	Shaft coupling	P 077	6-001198-0000
221	Joint coupling of shaft C 65/80 and Z70/90	P 313	6-003075-0000
222	Gearing corner, D-46mm	P 517/46	6-017225-0000
230	**Holders for exterior blinds**		**see Holders**

Zetta 70, 90 - Motor

Basic Product Specification

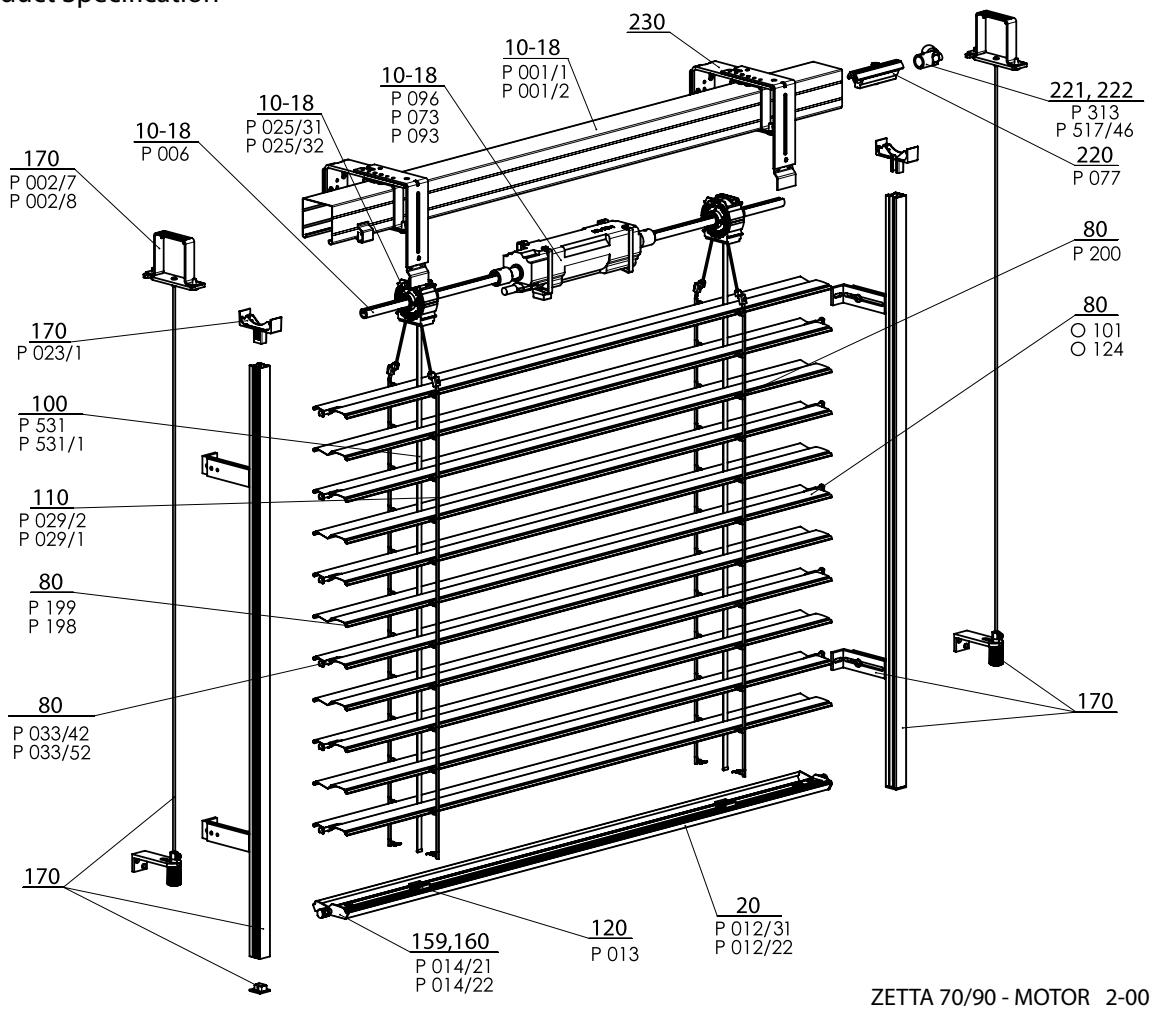

ZETTA 70/90 - MOTOR 2-00158-XXXX-G

Specification Zetta 70

	Head Rail		Bottom Rail	Slat	Side Guidance		Ladder	Textile Band	Assembly
					Guiding Channel	Wire			
Commercial Name **Dimension (mm)** **Material**	P 001 56 x 58 Fe	P 001/2 58 x 60 Al	P 012/22 67 x 13 Al	P 038 0,42 x 83 Al	See Chapter "Guidance" for guiding channel alternatives	P 036 Ø 3,2 Fe/PVC	P 029/2 60 x 9,5 PES	P 531, P531/1 6 x 0,28 PES P 028 P 028 9004 8x0,34	See Chapter "Assembly"
Color	Standard: galvanized steel plate natural (Al profil) Other RAL colors sprayed, DECORAL*		Standard: anodized aluminum Other RAL colors sprayed, DECORAL*	According to current ISOTRA a.s. scheme	Standard: anodized Other RAL colors sprayed, DECORAL*	grey black	grey black	grey black	

Specification Zetta 90

	Head Rail		Bottom Rail		Slat	Side Guidance		Ladder	Textile Band	Assembly
						Guiding Channel	Wire			
Commercial Name **Dimension (mm)** **Material**	P 001 56 x 58 Fe	P 001/2 58 x 60 Al	P 012/31 93,4 x 17,1 Al	P 012/35 93,4 x 17,1 Al	P 037 0,42 x 113 Al	See Chapter "Guidance" for guiding channel alternatives	P 036 Ø 3,2 Fe/PVC	P 029/1 80 x 9,5 PES	P 531, P531/1 6 x 0,28 PES P 028 P 028 9004 8x0,34	See Chapter "Assembly"
Color	Standard: galvanized steel plate natural (Al profil) Other RAL colors sprayed, DECORAL*		Standard: anodized aluminum Other RAL colors sprayed, DECORAL*		According to current ISOTRA a.s. scheme	Standard: anodized Other RAL colors sprayed, DECORAL*	grey black	grey black	grey black	

*Maximum dimension 4000mm.

We do not make atypical designs.

Standard Dimensions

Width (mm)		Height (mm)		Guaranteed Area (m^2)
min.	max.	min.	max.	max.
600	6000*	500	4000	24

* Note: The wider the blind, the lower its wind resistace class - see "Wind resistance of exterior blinds", page 3-6.

Zetta 70,90 - motor (2-00158-7001/9001)

Position	Item name	Business name - Abbreviation 2	Order number - Abbreviation 1
10-18	Head rail Fe	P 001/1	3-00166-PU22
10-18	Upper head rail	P 001/2	7-301180-000
10-18	Bearing Z70,S65	P 025/44	2-01942-9004
10-18	Bearing Z90/S90 8 mm	P 025/62	2-01811-9004
10-18	Bearing Z90/S90	P 025/32	2-01099-9004
10-18	Shaft	P 006	7-300198-0000
10-18	Motors (ELERO)	P 096	2-00648-0000
10-18	Motors (SOMFY)	P 073	2-00512-0000
10-18	Motors (GEIGER)	P 093	2-00572-0000
20	Bottom rail profile Z 90 a S90 raw/elox	P012/31	7-303928-XXXX
20	Bottom rail profile S65 elox	P 012/22	7-302680-PU52
21	Bottom rail Z90 PREMIUM	P 012/35	7-304764-0000
80	**Aluminium slat**		**see Slats**
80	Slat rubber Z70 - grey / black	P 199	7-301334-XXXX
80	Slat rubber Z90 - grey / black	P 198	7-301335-XXXX
80	Connecting hook	P 200	6-001206-0000
80	End guidance for slat "Z" L+R	P 033/42	3-03968-xxxx
80	End guidance for slat "Z" L+R metal	P 033/52	3-03965-PU19
80	Double sided End guidance "Z" metal	-	3-04827-PU19
100	Textile band 8x0,34mm - grey/black	P 028	6-001157-xxxx
100	Textile band 6x0,28 mm	P 531	6-001284-9006
100	Textile band 6x0,28mm-black	P 531/1	6-012700-9004
110	Ladder Z70 60/9,5 - grey/black	P 029/2	6-001159-XXXX
110	Ladder S90 86/9,5 - grey/black	P 029/1	6-011065-XXXX
120	Textile band holder	P 013	2-00039-0000
159, 160	End lock Z70 left+right	P 014/22	2-01117-XXXX
159, 160	End lock S90 left+right	P 014/21	2-01116-XXXX
170	**Guidance - wire/guiding channel + holder**		**see Guidance**
170	Upper head rail hanger - Fe PROFILE WINDSTABIL	P 002/7	2-01128-0000
170	Upper head rail hanger – Al PROFILE WINDSTABIL	P 002/8	2-01294-0000
170	Locking hanger of guiding channel	P 023/1	3-02758-9004
220	Shaft coupling	P 077	6-001198-0000
221	Joint coupling of shaft C 65/80 and Z70/90	P 313	6-003075-0000
222	Gearing corner, D-46mm	P 517/46	6-017225-0000
230	**Holders for exterior blinds**		**see Holders**

ZETTA 70 EXTERIOR BLIND DIAGRAM

VERTICAL SECTION **HANDLE CONTROL**

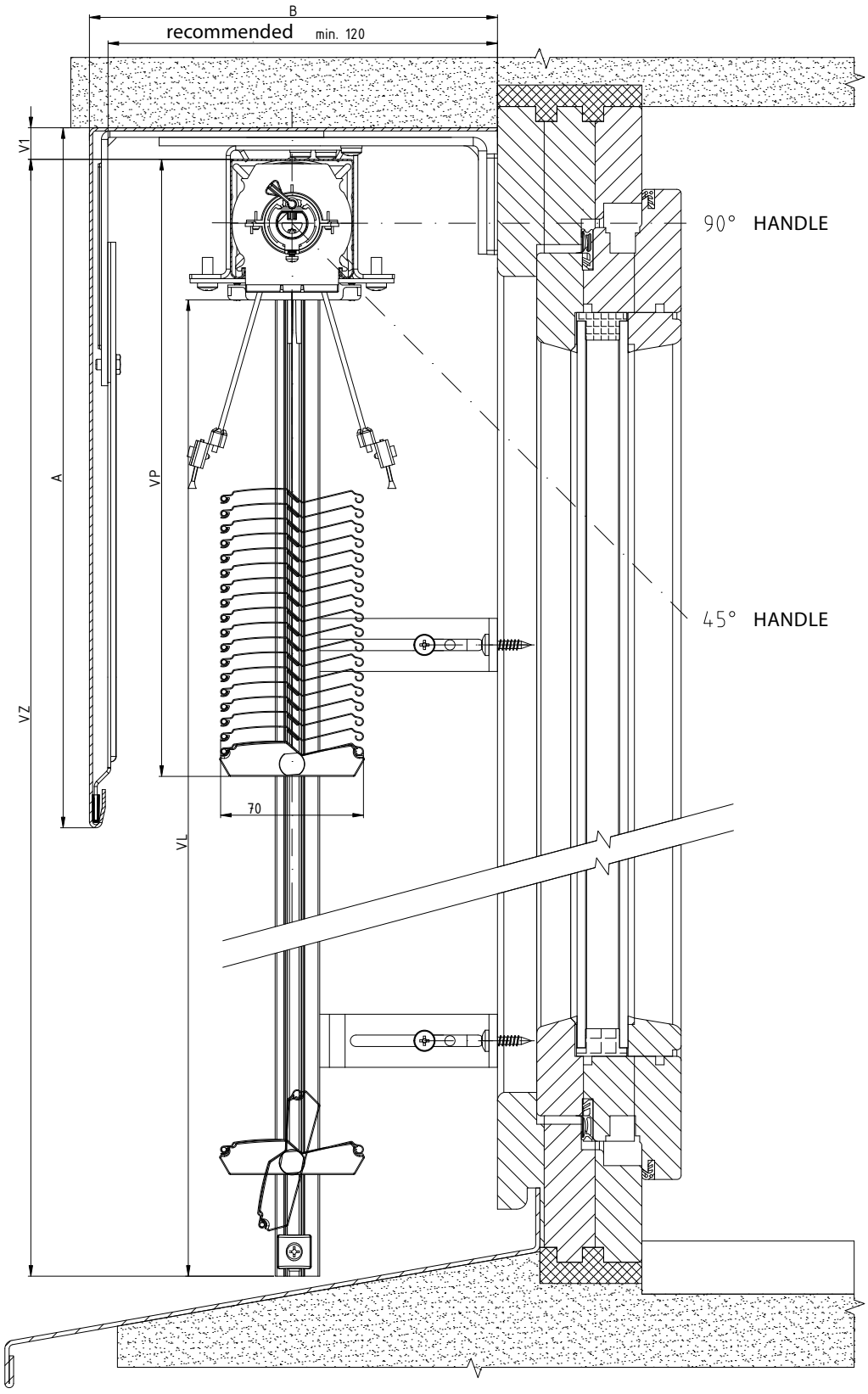

2-01825-0063-0

ZETTA 70 EXTERIOR BLIND DIAGRAM

VERTICAL SECTION HANDLE CONTROL

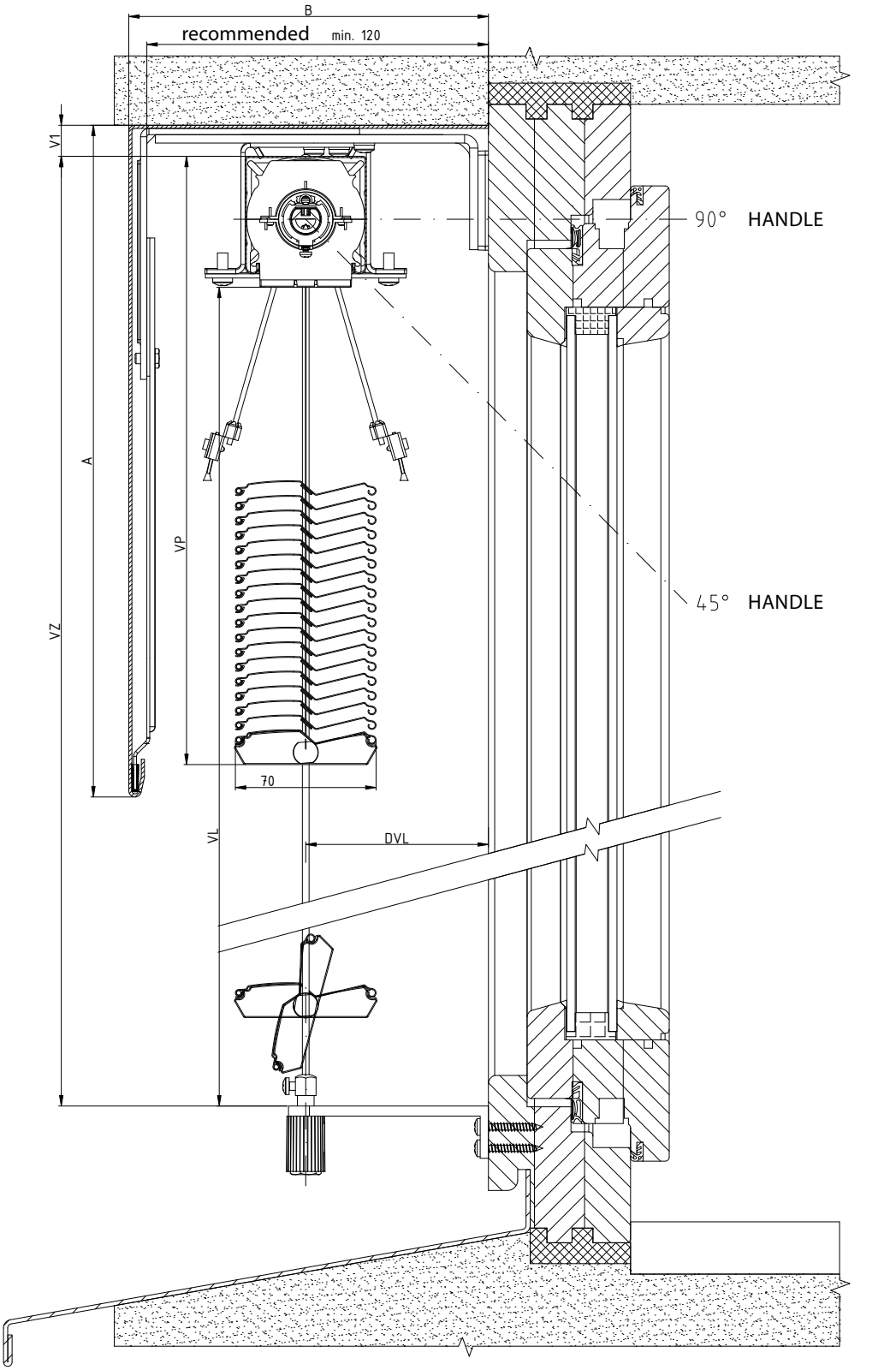

2-01825-0059-0

ZETTA 90 EXTERIOR BLIND DIAGRAM

VERTICAL SECTION **HANDLE CONTROL**

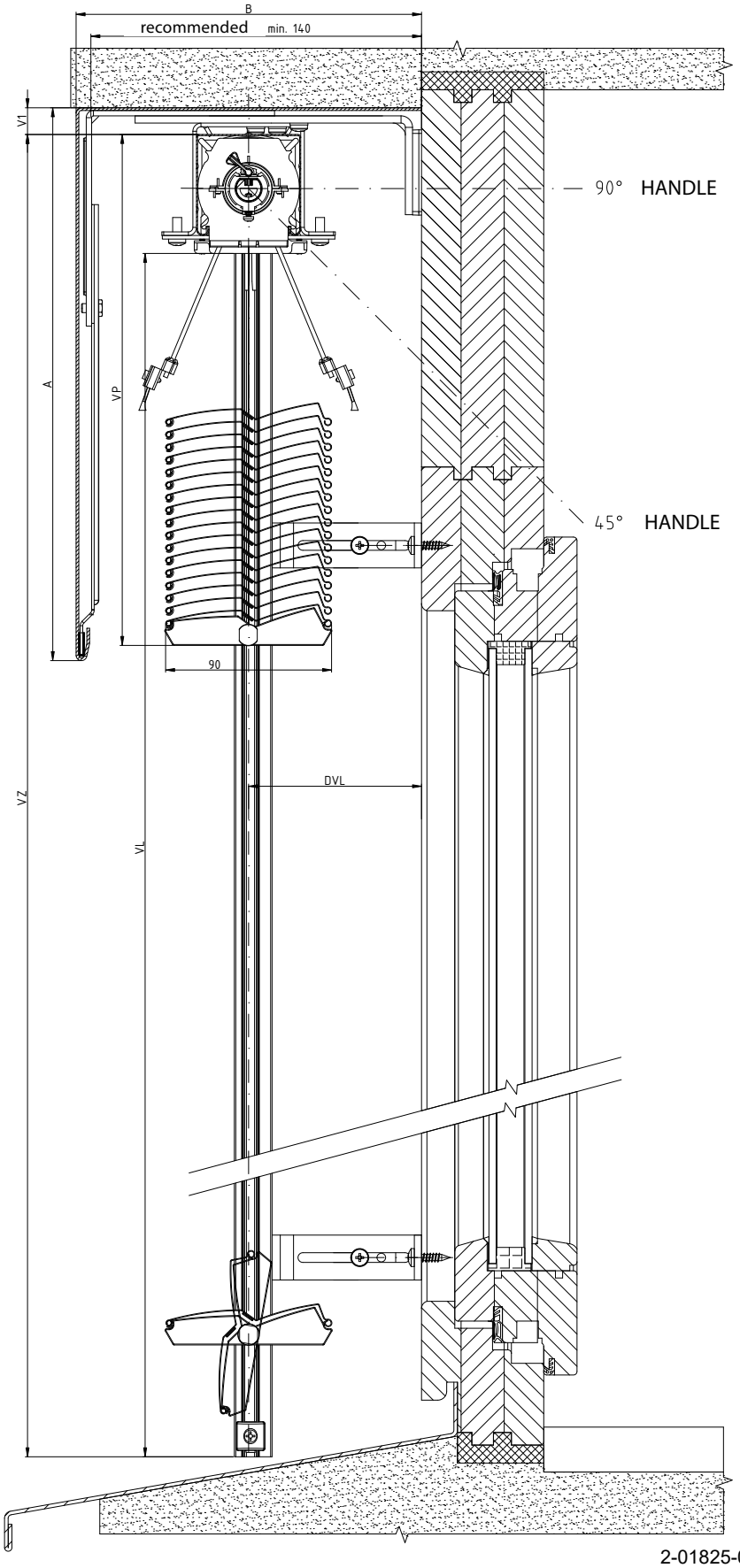

2-01825-0073-0

ZETTA 90 EXTERIOR BLIND DIAGRAM

VERTICAL SECTION HANDLE CONTROL

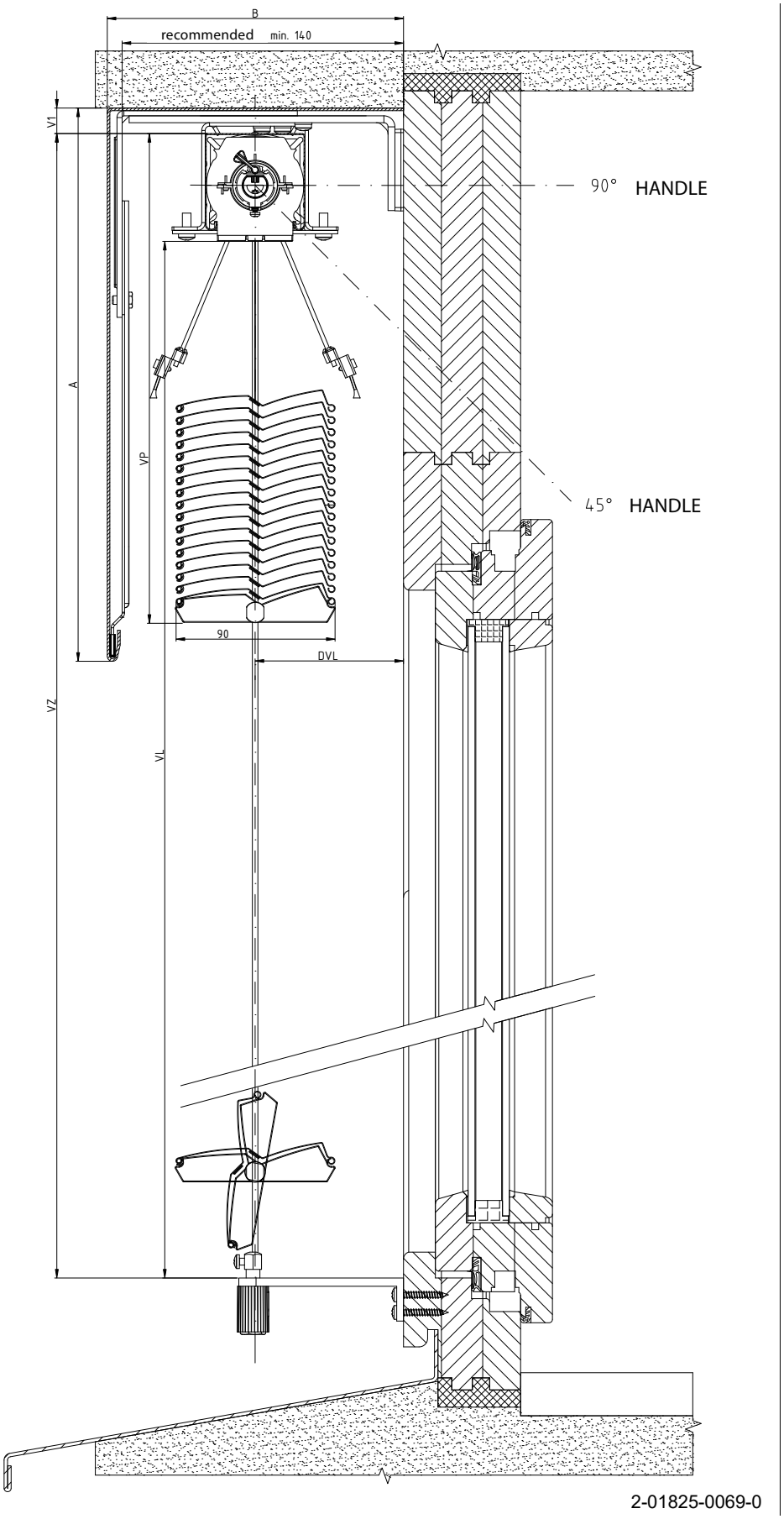

ZETTA 90, ZETTA 70 EXTERIOR BLIND DIAGRAM

HORIZONTAL SECTION **HANDLE CONTROL**

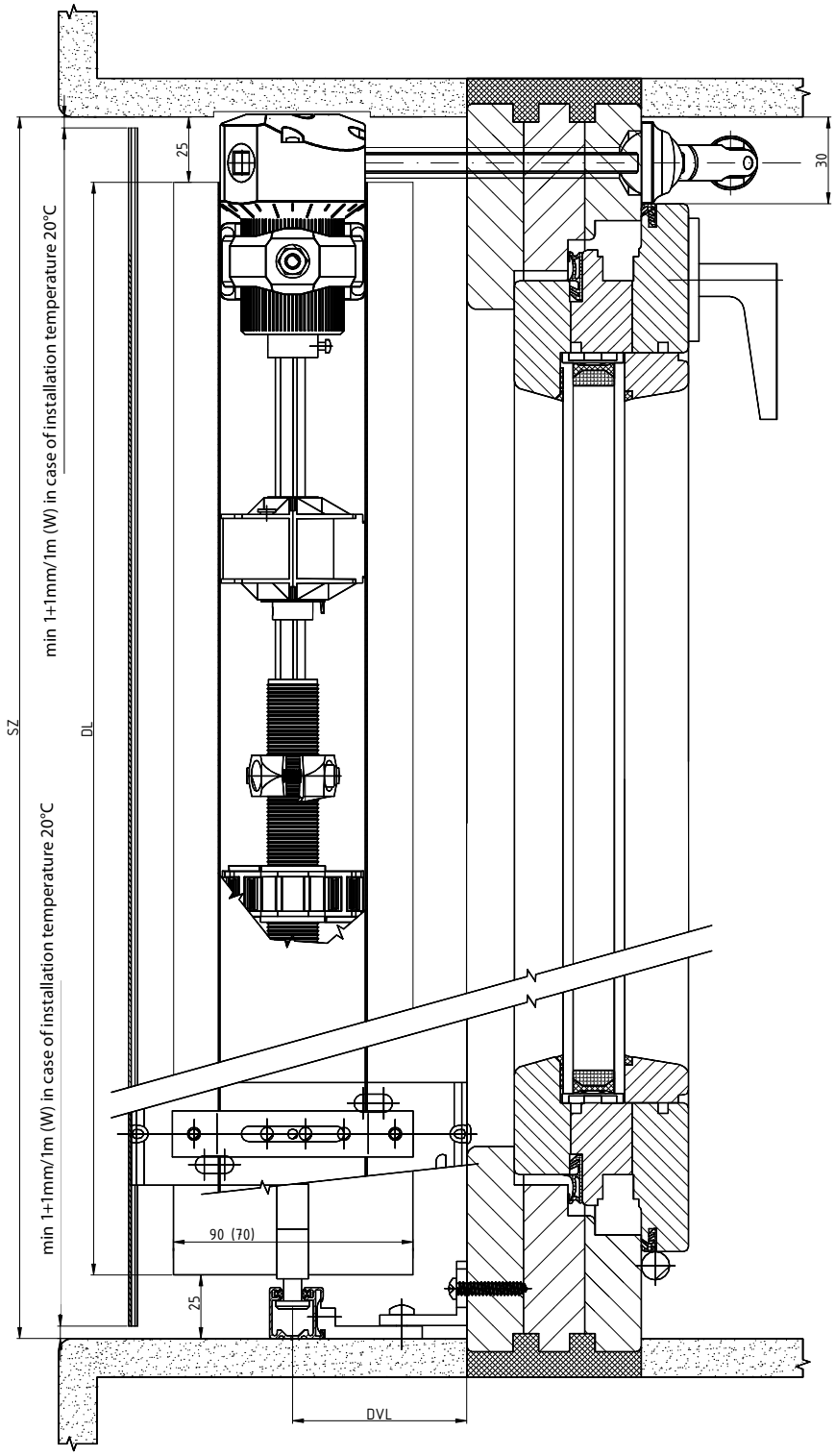

2-01825-0079-0

ZETTA 70, ZETTA 90 EXTERIOR BLIND DIAGRAM

HORIZONTAL SECTION HANDLE CONTROL

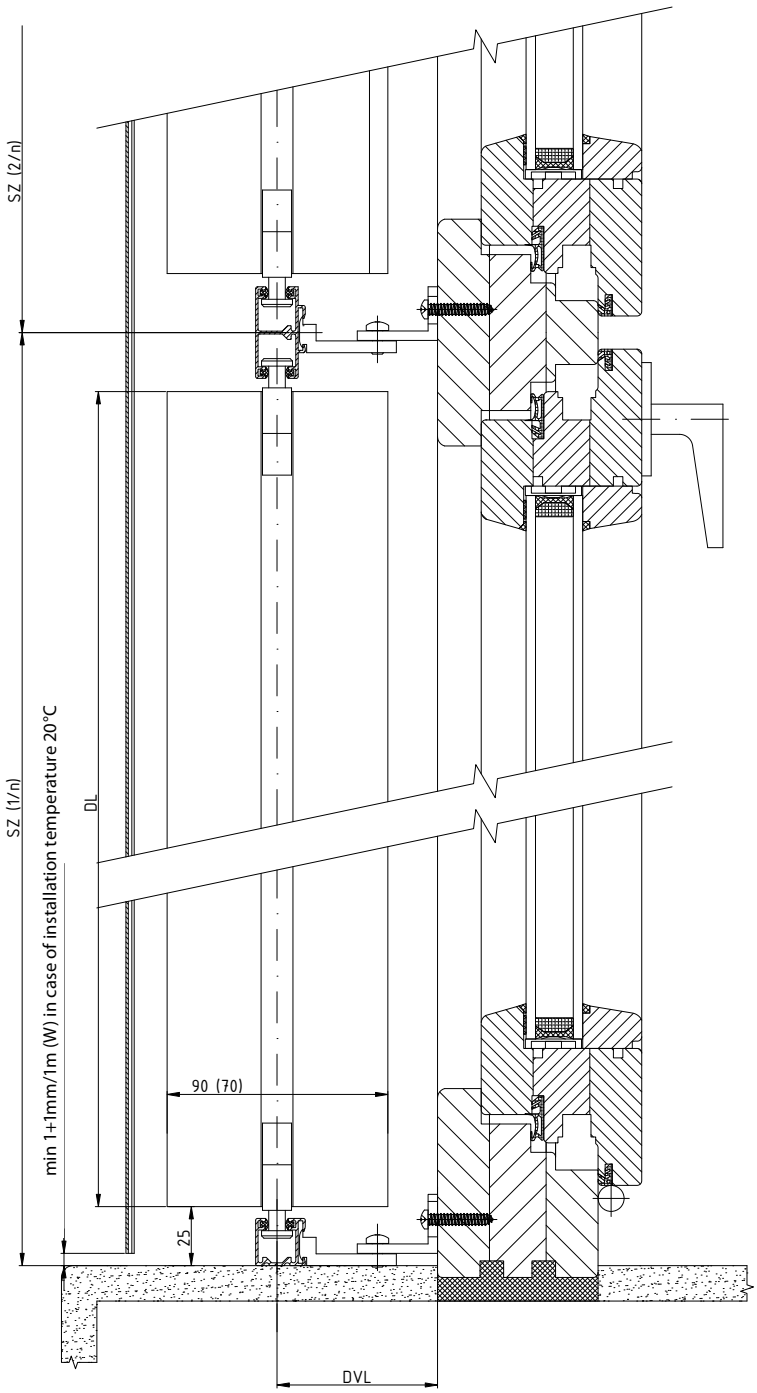

2-01825-0080-0

ZETTA 90 EXTERIOR BLIND DIAGRAM

VERTICAL SECTION **MOTOR CONTROL**

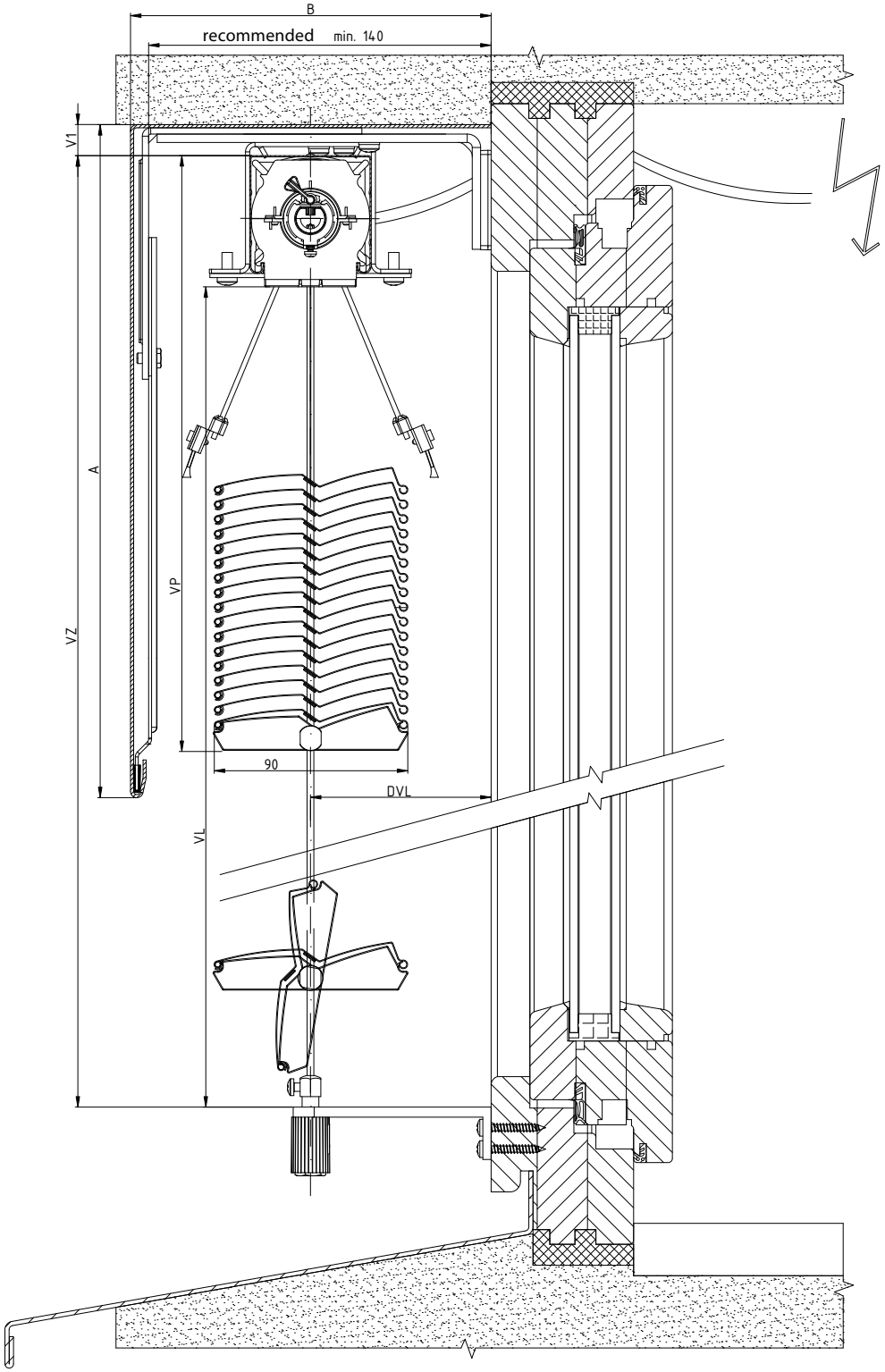

2-01825-0068-0

ZETTA 90/70 EXTERIOR BLIND DIAGRAM

VERTICAL SECTION **MOTOR CONTROL**

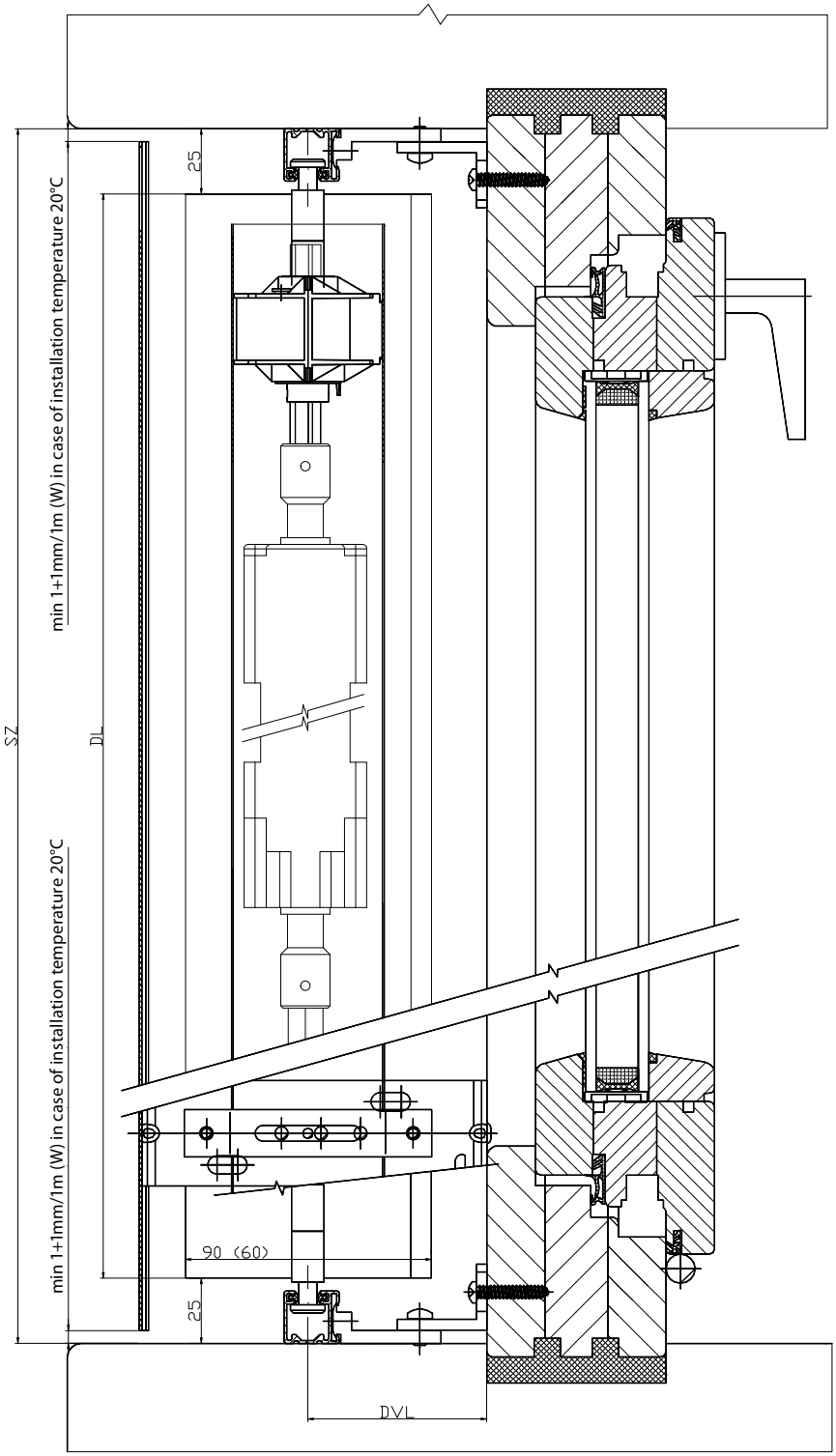

2-01825-0082-0

Shapes of exterior blind slats

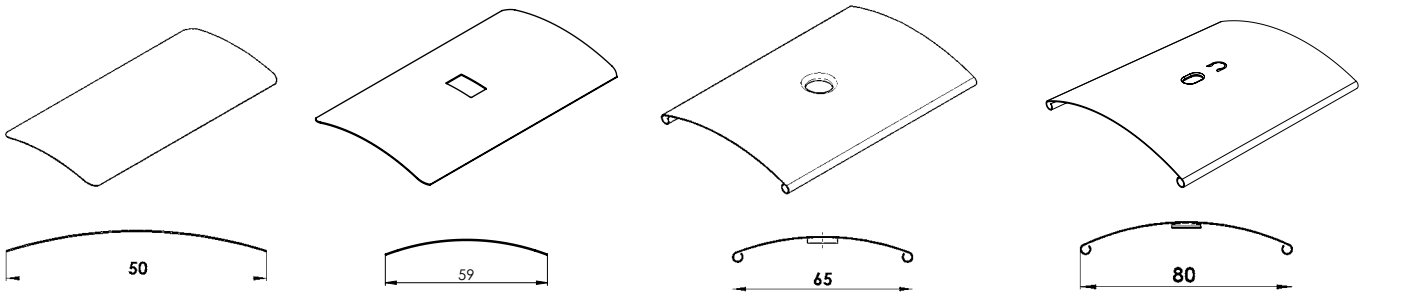

Cetta 50 | **Cetta 60 Flexi** | **Cetta 65** | **Cetta 80 + Cetta 80 Slim**

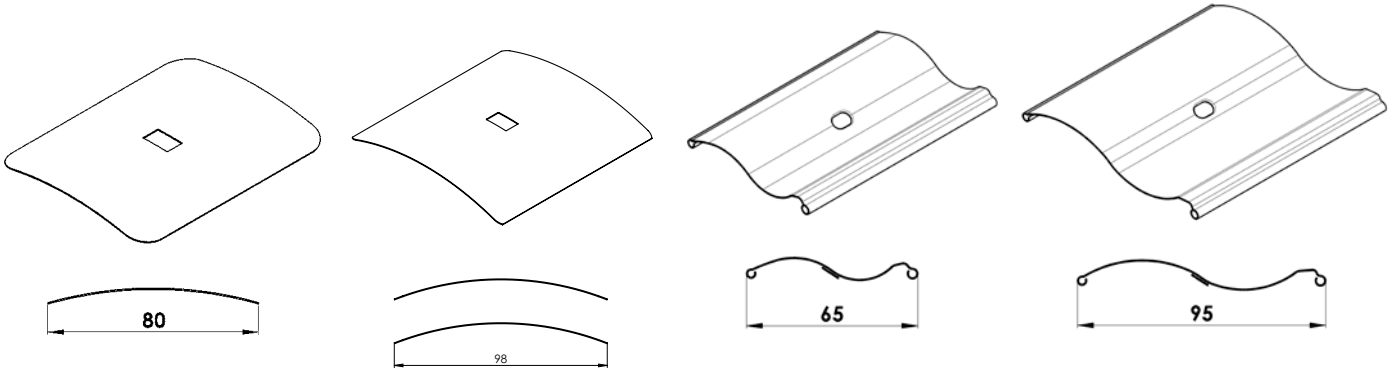

Cetta 80 Flexi | **Cetta 100 Flexi** | **Setta 65** | **Setta 90**

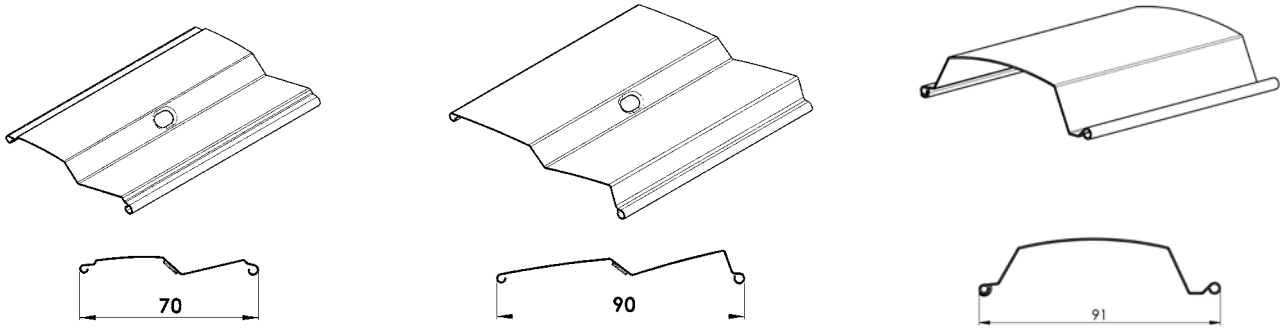

Zetta 70 | **Zetta 90** | **Titan 90**

Blind height (mm)	Packet height	
	Cetta 80	Cetta 80-Slim
500	125	110
600	130	115
700	140	120
800	145	125
900	150	130
1000	160	135
1100	165	140
1200	175	150
1300	180	150
1400	190	160
1500	195	165
1600	205	170
1700	210	175
1800	220	180
1900	220	185
2000	230	190
2100	235	195
2200	245	205

Blind height (mm)	Packet height	
	Cetta 80	Cetta 80-Slim
2300	250	205
2400	260	215
2500	265	220
2600	270	220
2700	280	230
2800	285	235
2900	295	240
3000	300	245
3100	310	250
3200	315	255
3300	325	265
3400	330	265
3500	340	275
3600	340	275
3700	350	285
3800	355	290
3900	365	295
4000	370	300

Cetta 80-Slim
Visible packet saving in comparison with Cetta 80.

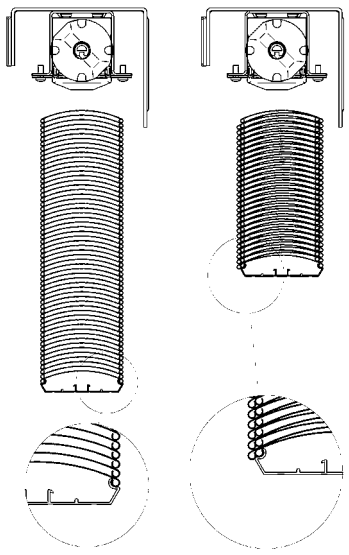

SLAT C50 - SET 2-01072-XXXX-0

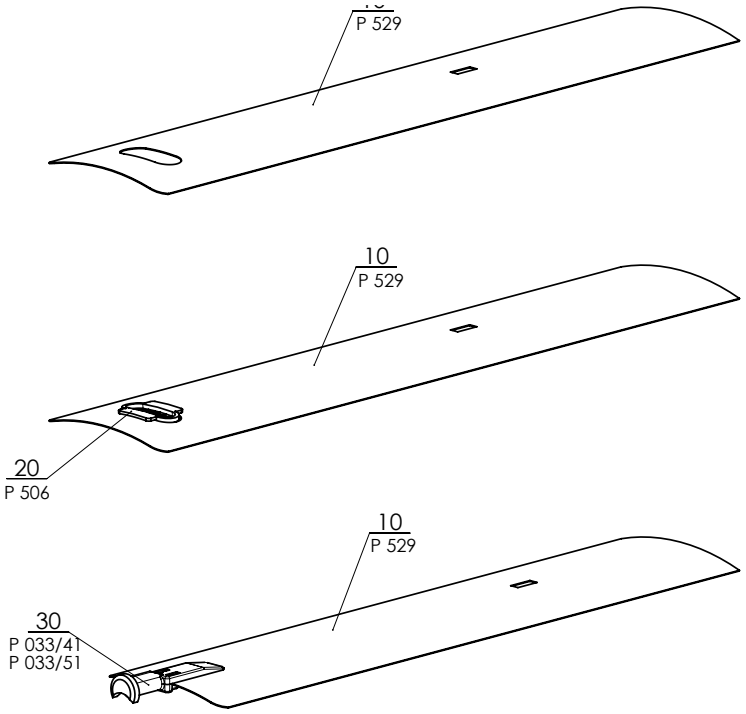

Cetta 50

Position	Item name	Business name	Drawing number
10	Al Slat	P 529	2-01072-XXXX-0
20	Slat insert of guide cord	P 506	2-01072-XXXX-0
30	End guidance L+R (plastic)	P 033/41	3-03967-xxxx
30	End guidance L+R (metal)	P 033/51	3-03964-PU19

SLAT C60 FLEXI - SET 2-01501-XXXX

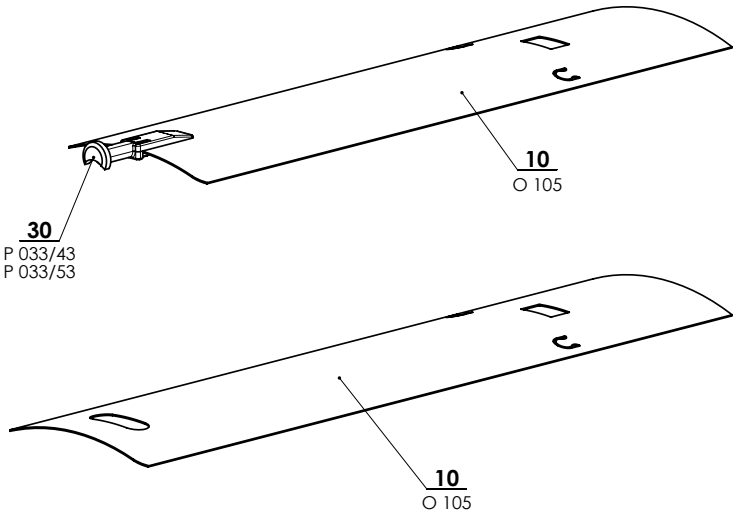

Cetta 60 Flexi

Position	Item name	Business name	Drawing number
10	Al Slat	O 105	2-01501-XXXX-0
30	End guidance L+R (plastic)	P 033/43	3-03969-xxxx
30	End guidance L+R (metal)	P 033/53	3-03966-PU19

SLAT C65 - SET 2-01071-XXXX-0

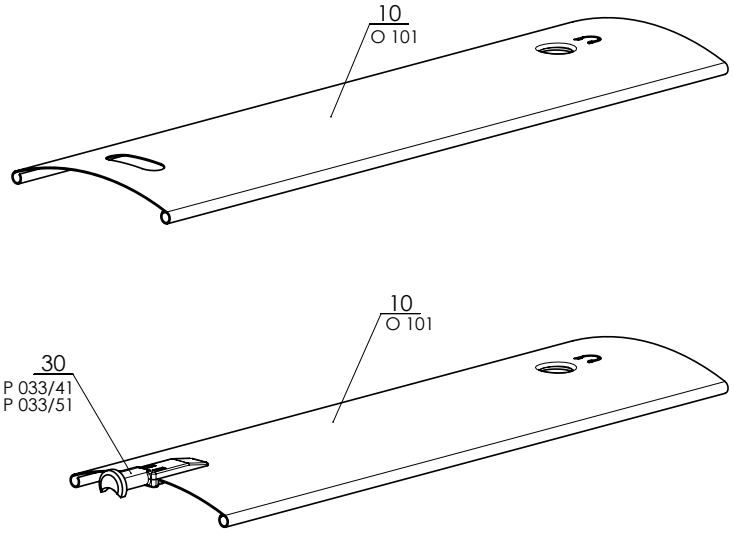

Cetta 65

Position	Item name	Business name	Drawing number
10	Al Slat	O 101	2-01071-XXXX-0
30	End guidance L+R (plastic)	P 033/41	3-03967-XXXX
30	End guidance L+R (metal)	P 033/51	3-03964-PU19

SLAT C80 - SET 2-01056-XXXX-1

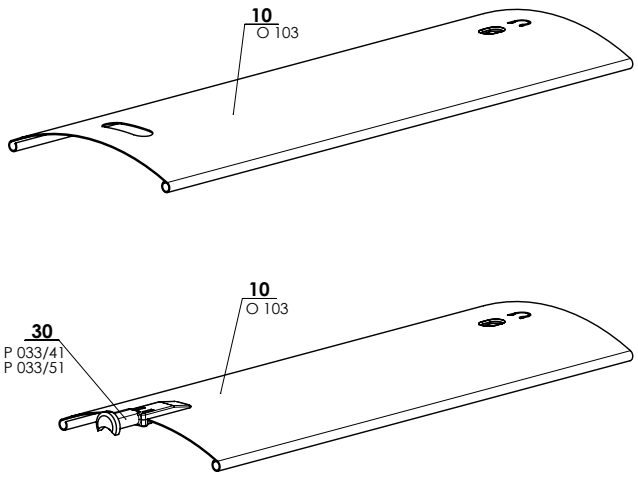

Cetta 80

Position	Item name	Business name	Drawing number
10	Al Slat	O 103	2-01056-XXXX-1
21	Plastic insert Slim	P 075/1	2-01056-XXXX-1
30	End guidance for slat "C" L+R (plastic)	P 033/41	3-03967-XXXX
30	End guidance L+R (metal)	P 033/51	3-03964-PU19

Slat C80 FLEXI - SET 2-01057-XXXX-1

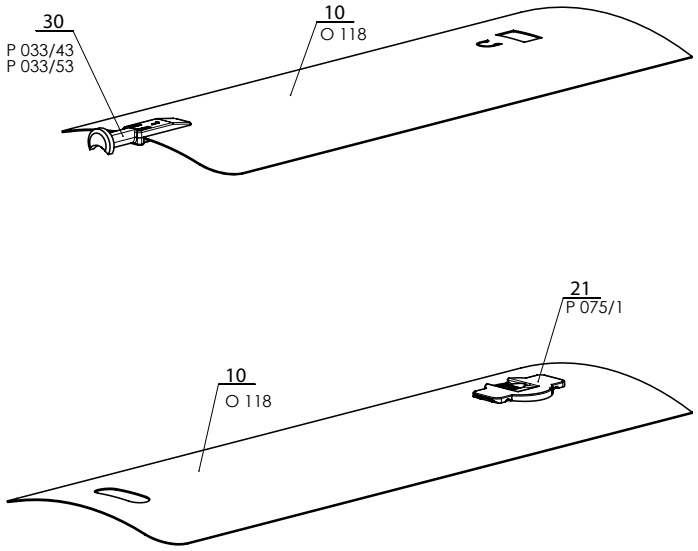

Cetta 80 Flexi

Position	Item name	Business name	Drawing number
10	Al slat	O 118	2-01057-XXXX-1
21	Plastic insert Slim	P 075/1	2-01057-XXXX-1
30	End guidance L+R (plastic)	P 033/43	3-03969-xxxx
30	End guidance L+R (metal)	P 033/53	3-03966-PU19

Slat C100 Flexi - SET 2-01502-XXXXX-1

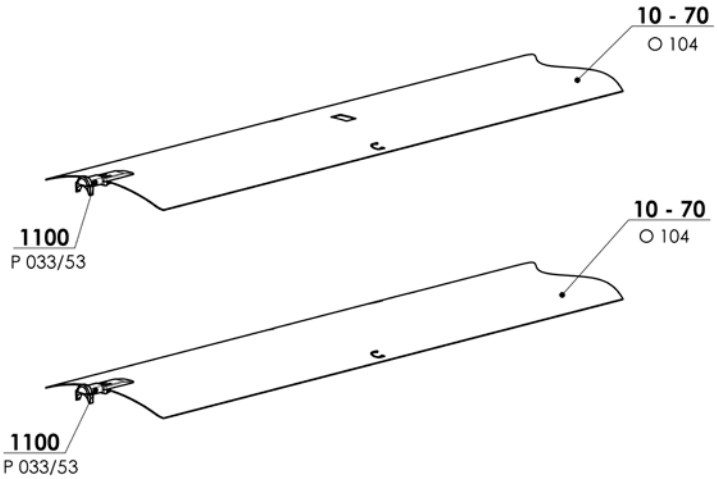

Cetta 100 Flexi

Position	Item name	Business name	Drawing number
10 - 70	Al slat	O 104	2-01502-XXXXX-1
1100	End guidance L+R (metal)	P 033/53	3-03966-PU19

SLAT S65 - SET 2-00687-XXXX-B

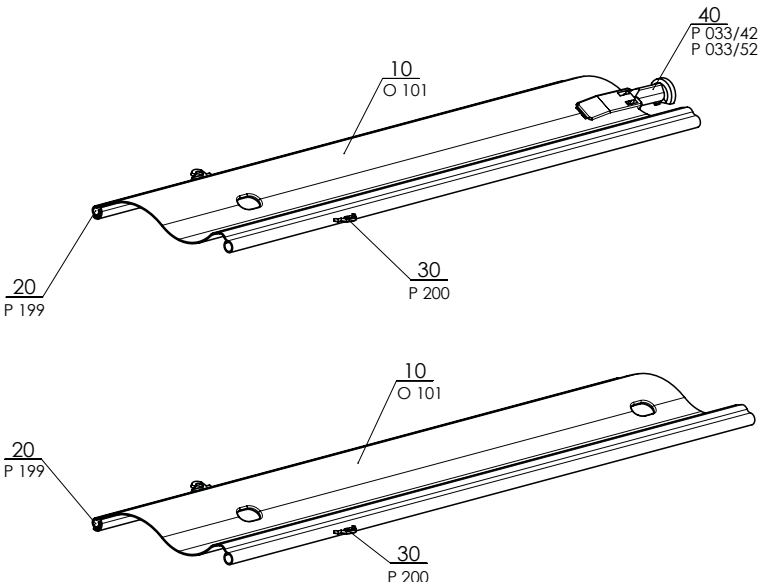

Setta 65

Position	Item name	Business name	Drawing number
10	Al slat	O 101	2-00687-XXXX-B
20	Slat rubber	P 199	2-00687-XXXX-B
30	Connecting hook	P 200	2-00687-XXXX-B
40	End guidance for slat L+P (plastic)	P 033/42	3-03968-XXXX
40	End guidance L+R (metal)	P 033/52	3-03965-PU19

SLAT S90 - SET 2-00686-XXXX-B

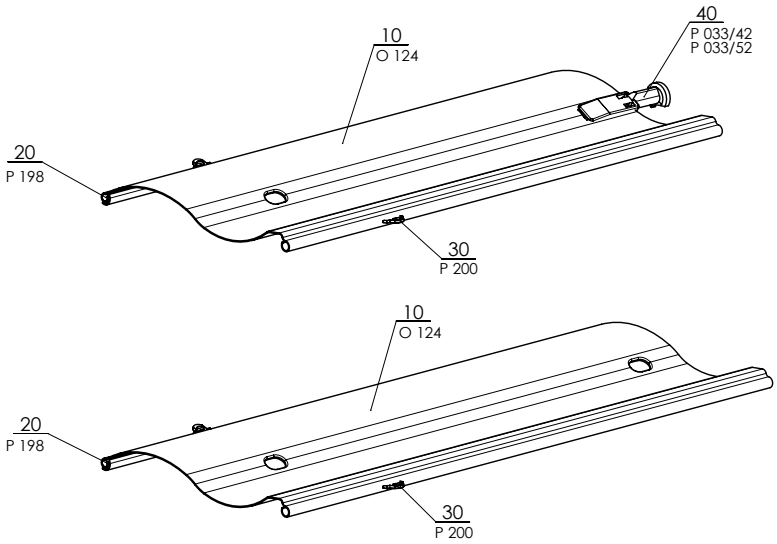

Setta 90

Position	Item name	Business name	Drawing number
10	Al slat	O 124	2-00686-XXXX-B
20	Slat rubber	P 198	2-00686-XXXX-B
30	Connecting hook	P 200	2-00686-XXXX-B
40	End guidance for slat L+P (plastic)	P 033/42	3-03968-XXXX
40	End guidance L+R (metal)	P 033/52	3-03965-PU19

SLAT Z70 - SET 2-00515-XXXX-E

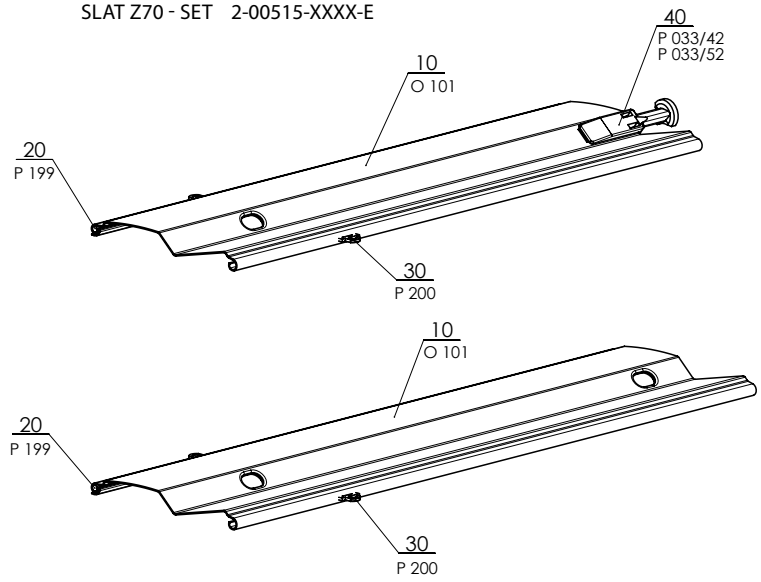

Zetta 70

Position	Item name	Business name	Drawing number
10	Al slat	O 101	2-00515-XXXX-E
20	Slat rubber	P 199	2-00515-XXXX-E
30	Connecting hook	P 200	2-00515-XXXX-E
40	End guidance for slat L+P (plastic)	P 033/42	3-03968-XXXX
40	End guidance L+R (metal)	P 033/52	3-03965-PU19

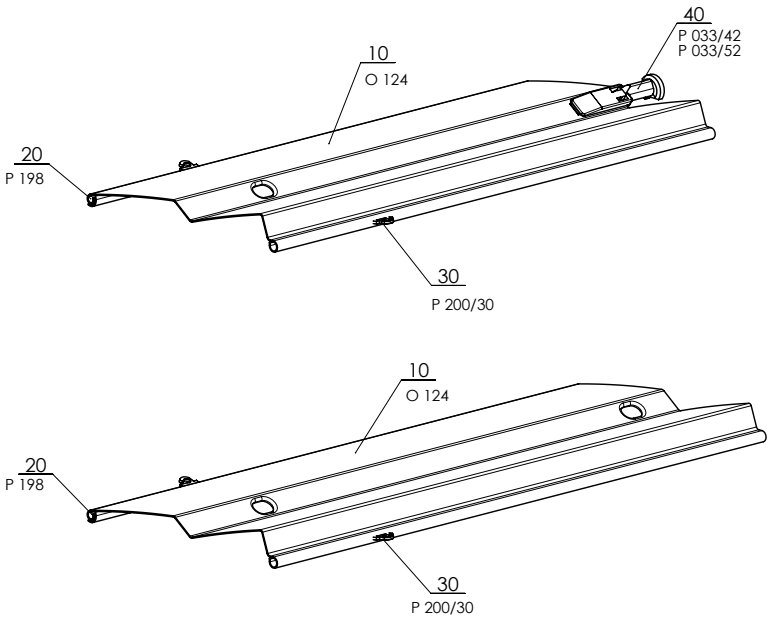

Zetta 90

Posi-tion	Item name	Business name	Drawing number
10	Al slat	O 124	2-00514-XXXX-C
20	Slat rubber	P 198	2-00514-XXXX-C
30	Connecting hook	P 200/30	2-00514-XXXX-C
40	End guidance for slat L+P (plastic)	P 033/42	3-03968-XXXX
40	End guidance L+R (metal)	P 033/52	3-03965-PU19
40	Double sided End guidance "Z" metal	-	3-04827-PU19

Guide types for Venetian blinds with guidance using guiding channels

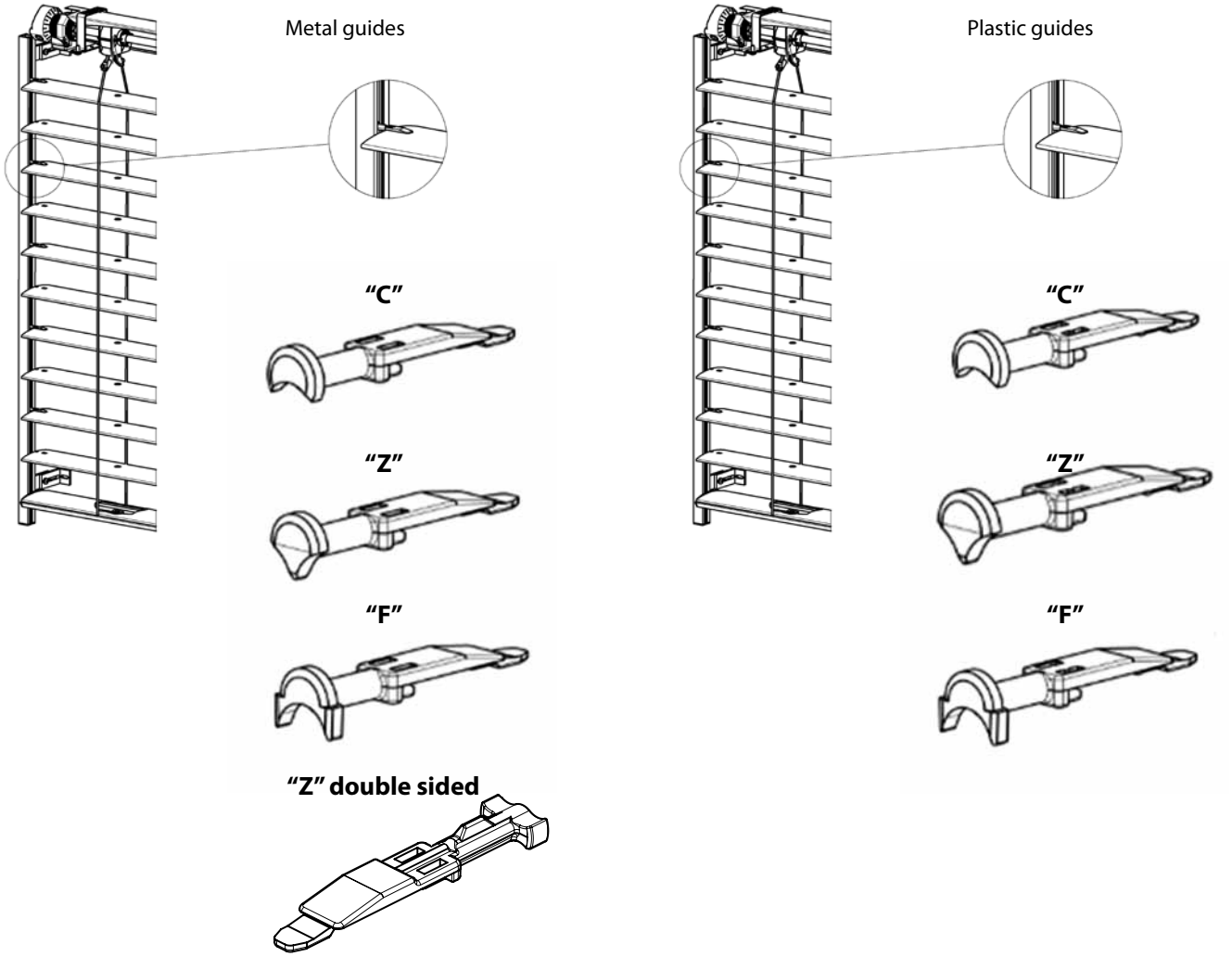

Control for Cetta, Setta, Zetta

Handle (2-00339-0000)

The controls serve for pulling the blind up and down and setting the slat.
The rod control mechanism is to be passed to the interior at an angle of 45° and 90° using a bushing and a hexagonal or square rod.
Rod colour versions: white; anodised

Handle length determination

The minimum length of the crank is 450 mm.

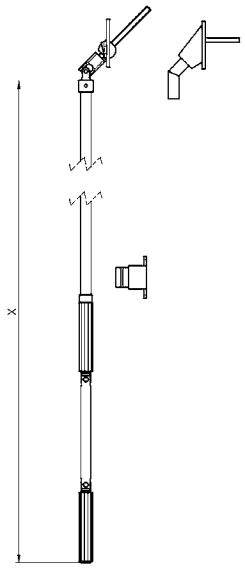

x –control handle length specified

Handle types

Complete handle square 45° P150/21 (32x70)
Complete handle square 90° P150/2 (23x85)

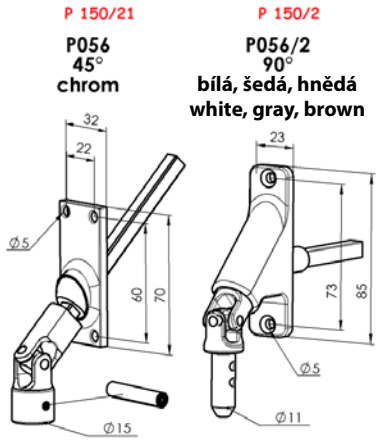

square 8x8mm

Complete handle hexagonal 90° P150/1 (23x85)
Complete handle hexagonal 45° P150/11 (22x85)
Complete handle hexagonal 45° small P150/12 (17x73)

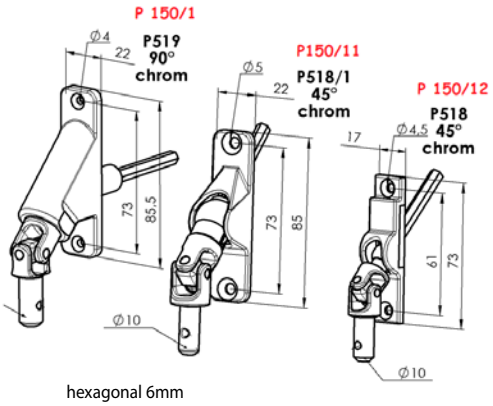

hexagonal 6mm

Complete handle removable square 90° P150/4 (27x85)

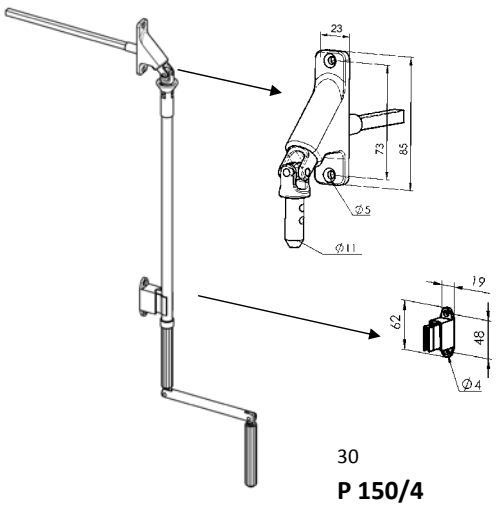

30
P 150/4

Handle without bushing P150/8

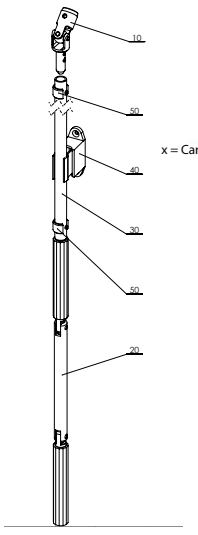

Complete handle with cardan square 90° P150/3 (23x85)

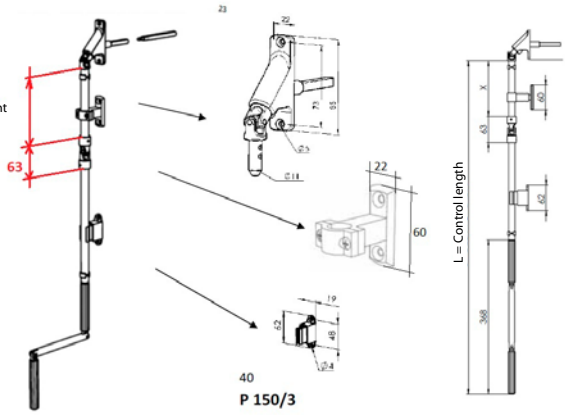

Gearing Type

Gearing with square aperture
045/5 (6-013232)

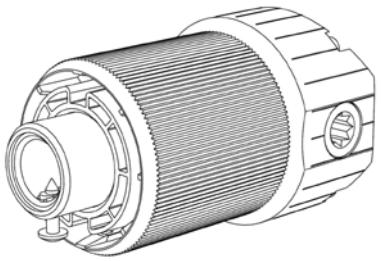

Gearing with hexagonal aperture
P 045/6 (6-013233)

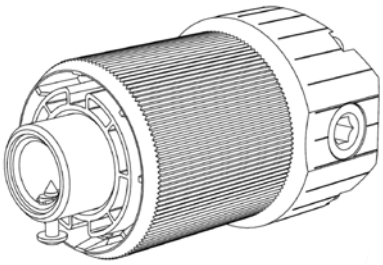

Gearing
P 045/9 (6-010260)

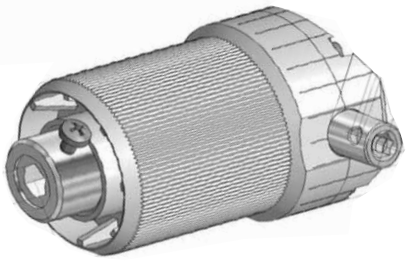

Gearing with hexagonal aperture, extended (STS)
P045/4 (6-008115)

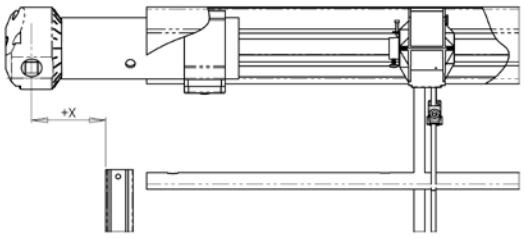

Plastic gearing with hexagonal aperture - interior
(Cetta 35, Cetta 50)
P 517/2 (6-001250-0002)

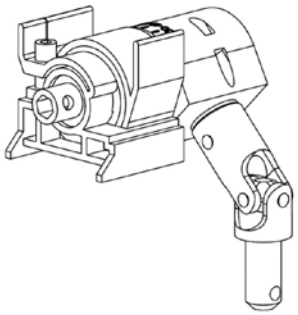

Gearing with hexagonal aperture for handle control
(Cetta 35, Cetta 50)
P228 (2-00132)

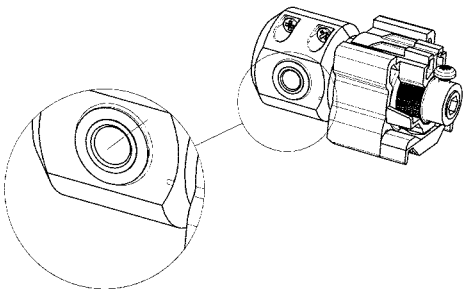

Gearing for cord control
(Cetta 35, Cetta 50)
P227 (2-00133)

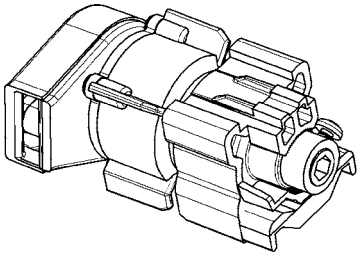

Gearing extension

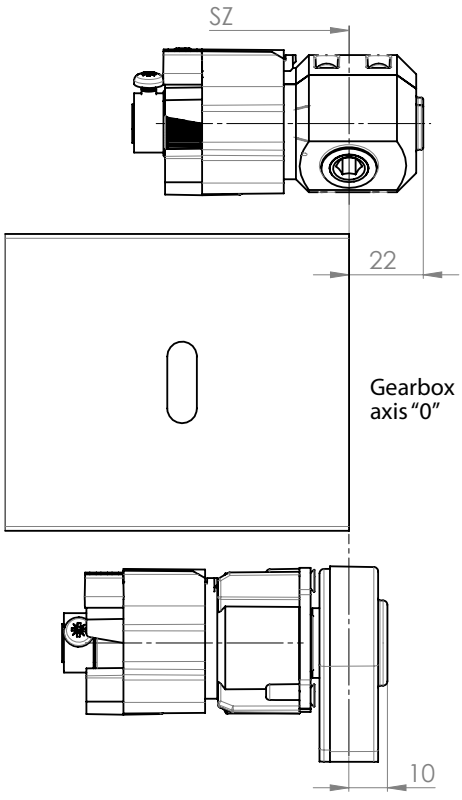

Gearing Shift Scheme

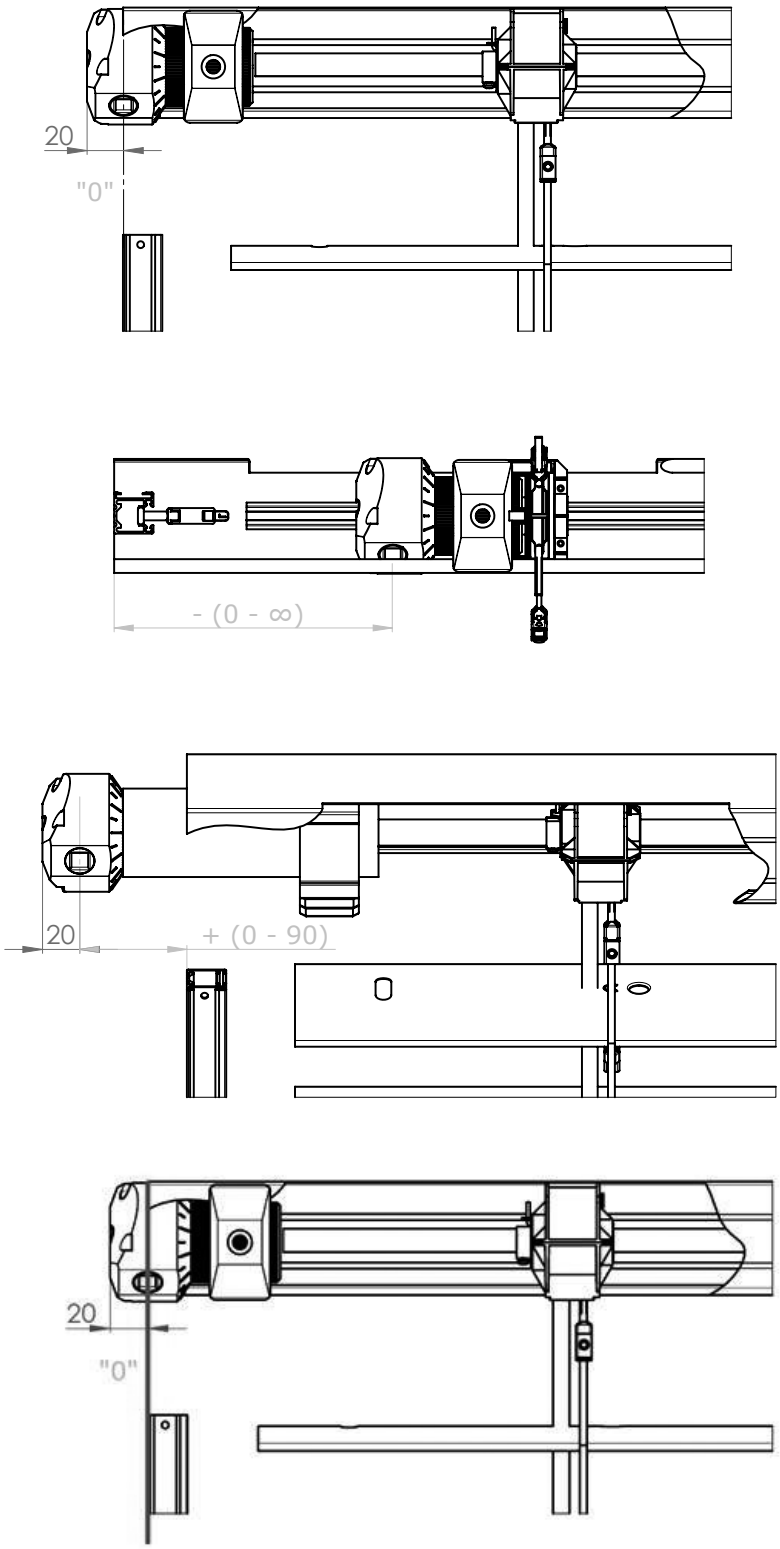

Gearbox axis "0"

The gearing position (possible shift) in the head rail depends on the specific mounting of frame window, reveal. The gearing axis is the distance of the gearing center axis from the outer edge of guiding channel, or outer edge of slat in the case of the steel wire guidance.

Safety Instructions:

- As soon as you reach the end stop, do not try to continue moving the handle.
- Rotate the handle only in the respective direction, evenly, and without applying force.

Motor control

Motor control

Motor controls serve for pulling the blind up and down and setting the slat.
Motor controls allow selecting the control by the sun/wind sensor, remote control, or switch. It is possible to control several blinds at once depending on their dimensions. In this case, the motor is located in one blind in the group.

Types of motors

Item name	Business name - Abbreviation 2	Order number - Abbreviation 1	Cable lenght
MOTOR Somfy WT 6Nm up to 10m^2	P 073/6J	6-002594-0000	0,5
MOTOR Somfy WT 10 Nm up to 16m^2	P 073/10J	6-002594-0001	0,5
MOTOR Somfy WT 18 Nm up to 20 m^2	P 073/18J	6-002594-0004	0,5
MOTOR Somfy WT PROTECT 18 Nm up to 20 m^2	P 073/18JP	6-002594-0018P	0,5
MOTOR Somfy J4S WT PROTECT 6 Nm up to 10m^2	P 073/6S	6-020362-0006	0,5
MOTOR Somfy J4S WT PROTECT 10 Nm up to 16m^2	P 073/10S	6-020362-0010	0,5
MOTOR Somfy J4S IO PROTECT 6 Nm up to 10m^2	P 643/676S	6-019616-0676	0,5
MOTOR Somfy J4S IO PROTECT 10 Nm up to 16 m^2	P 643/677S	6-019616-0677	0,5
MOTOR Somfy IO PROTECT 18 Nm up to 20 m^2	P 643/681	6-016065-0681	0,5
MOTOR Geiger 6 Nm up to 13 m^2	P 093/2	3-01170-3153	0,9
MOTOR Geiger 10 Nm up to 21 m^2	P 093/3	6-006880-0002	0,9
MOTOR Geiger 20 Nm up to 28 m^2	P 093/6	6-006880-0006	0,9
Motor cable Geiger; l= 900mm	P 094	6-006880-0003	0,9
MOTOR Geiger AIR 6 Nm up to 7 m^2	PR0879/6	6-014807-0006	0,9
MOTOR Geiger AIR 10 Nm up to 13 m^2	PR0879/10	6-014807-0010	0,9
MOTOR Geiger AIR 20 Nm up to 21 m^2	PR0879/20	6-014807-0020	0,9
Motor cable Geiger AIR with LOXON chip	P094/2	6-014819-0000	0,9
MOTOR Elero 6 Nm up to 10 m^2	P096soft/06	6-008179-0006	0,8
MOTOR Elero 9 Nm up to 16 m^2	P096soft/09	6-008179-0009	0,8

ELERO AKKU NOTRAFF up to 8m² - SET

Item name	Business name - Abbreviation 2	Order number - Abbreviation 1
MOTOR Elero AKKU NOTRAFF 4 Nm up to 8 m² (12V)	P 096softDC/04	6-015554-0000
motor mount 56x58mm		6-012081-0000
Adapter		6-001624-0002
Quickconnect, IP65	X.3952701	6-015557-0000
Exit Safe	6-016465-0000	6-002593-0006

ELERO AKKU NOTRAFF up to 16m² - SET

Item name	Business name - Abbreviation 2	Order number - Abbreviation 1
MOTOR Elero AKKU NOTRAFF 10 Nm up to 16 m² (12V)	P 096softDC/10	6-015554-0010
motor mount 56x58mm		6-012081-0000
Adapter		6-001624-0002
Quickconnect, IP65	X.3952701	6-015557-0000
escaperoute model up to 10A		6-017114-0000

Motors ISOTRA BASIC + accessories

Item name	Business name - Abbreviation 2	Order number - Abbreviation 1
Motor ISOTRA BASIC AM55 6 Nm/35*		6-017847-0006
Motor ISOTRA BASIC AM55/35*		6-017847-0010
Receiver ISOTRA BASIC Hirschmann plug		6-017848-0000
Remote control ISOTRA BASIC, 1-channel AC127-01, white		6-017850-0001
Remote control ISOTRA BASIC, 6-channel AC127-06, white		6-017850-0006
Mounting cable ISOTRA BASIC		6-017849-0000
Remote control ISOTRA BASIC, 1-channel handle USB AC127L-01, white		6-017916-910
Remote control ISOTRA BASIC, 6-channel handle USB AC127L-06, white		6-017917-9010
Solar wind sensor - ISOTRA BASIC		6-018212-0000

*When ordering a separate ISOTRA BASIC AM55 6Nm or 10Nm motor, the ISOTRA BASIC Hirschmann plug radio receiver and all the motor components will be delivered together with the motor.

ELERO solar kit up to 8m², solar kit up to 16m²

Item name	Business name - Abbreviation 2	Order number - Abbreviation 1
motor JA04 Soft DC 4Nm up to 8m²		6-015554-0000
motor JA10 Soft DC 10Nm up to 16m²		6-015554-0010
receiver Combio-868 JA DC 10 Nm		6-015555-0000
energy unit DC Solar		6-018680-0000
Quickconnect, IP65		6-015557-0000

Motor control

Motor Wiring Diagram

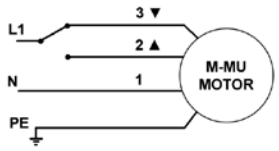

1 - Blue
2 - Black
3 - Brown
PE - Yellow-green

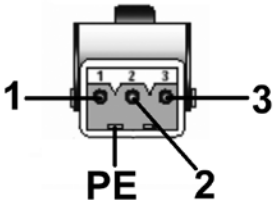

1 - neutral wire (N)
2 - phase wire (up)
3 - phase wire (down)
PE - ground wire

RTS Motor Wiring Diagram

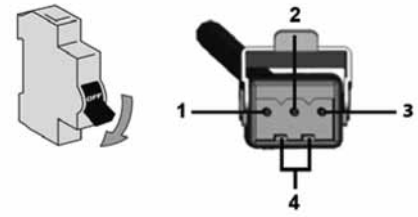

1 - neutral wire (N)
2 - phase wire (L)
3 - not connected
4 - ground wire (PE)

Parameter	Motor Somfy	Motor Geiger
Torque	6 - 18 Nm	3 - 20 Nm
Power Input	90 - 210 W	90 - 190 W
Current Consumption	0,41 - 0,7 A	0,4 - 0,85 A
Nominal Voltage	230 V / 50 Hz	230 V / 50 Hz
RPM	24 rpm	26 rpm
End Switch Capacity	73	80
Motor Protection Class	IP54	IP54
Maximum Operation Time	approx. 6 min.	approx. 6 min.
Weight	1,35 - 2,41 kg	-

Important Instructions:

- The electric equipment can be assembled only by qualified persons.
- Never connect more than one motor to one switch. One switch can control more drives only in the case of group control.

Note: See the manuals of Somfy, Geiger and Elero companies for detailed wiring diagrams.

Recommended Torque for Motor Controlled Blinds (Nm)

Blind Width (mm) / Blind height (mm)	400	1800	2400	3000	3600	4200	4800	5400	6600	7200
1000	3	3	3	3	3	3	3	3	3	3
2000	3	3	3	3	6	6	6	6	6	10
3000	3	3	6	6	6	6	10	10	10	20
4000	3	6	6	10	10	10	10	20	20	20

As a standard, the motor cable is equipped with the STA S3 male terminal.
The supply cable for the blind is equipped with the STAK 3 female terminal.
The STAK 4 female terminal is used for the SMI and KNX motors.

Guidance – Wire

Guide types for wire-guided blinds
(Cetta 35, Cetta 50, Cetta 65, Cetta 80, Cetta 80-Flexi)

Corner wire guide, 25 - 46 mm P031/6 (2-00822)

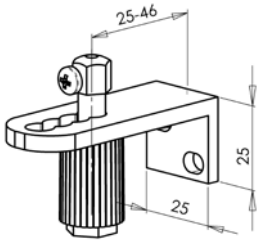

Corner wire guide, 39 - 60 mm P 031 (2-00195)

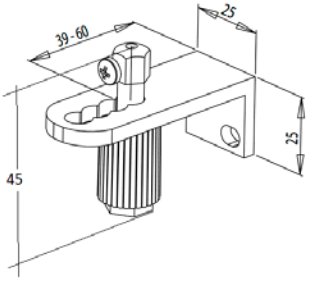

Corner wire guide, 49 - 70 mm P 031/1 (2-00137)

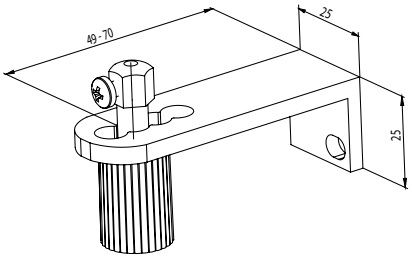

Single cable guide, 20 - 40 mm P032/1 (2-01649)

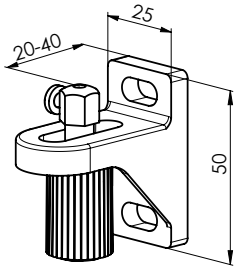

Single cable guide, 30 - 75 mm P032/2 (2-01648)

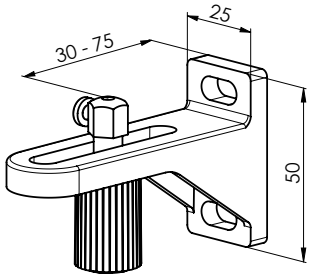

Single cable guide, 70 - 130 mm P032/3 (2-01647)

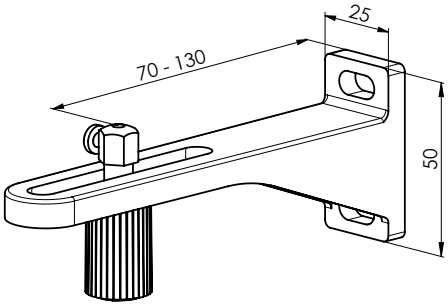

Single cable guide, 90 -165 mm P032/4 (2-01646)

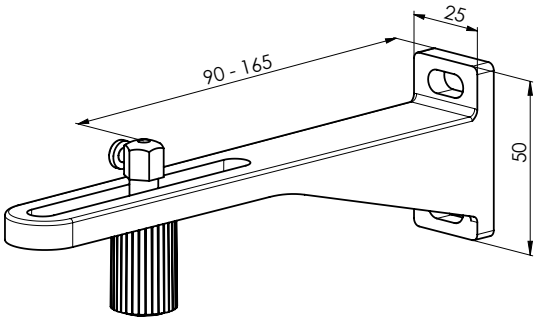

Single cable guide, 120 - 200 mm P032/5 (2-01645)

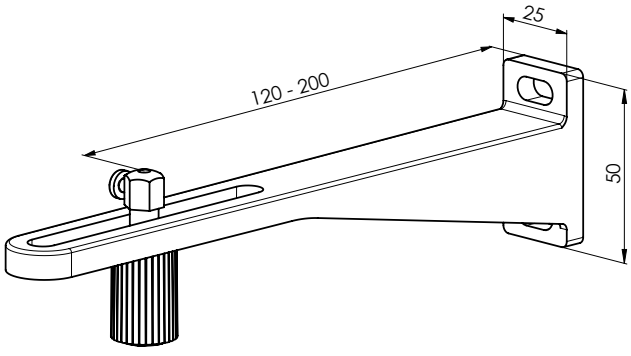

Double cable guide, 40 mm P032/6 (2-01654)

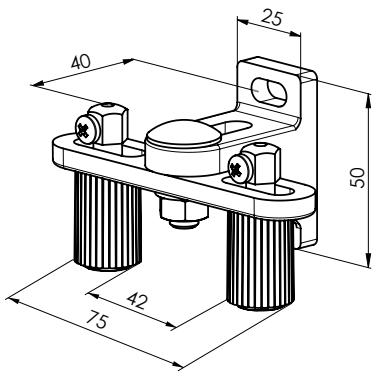

Double cable guide, 48 - 75 mm P032/7 (2-01653)

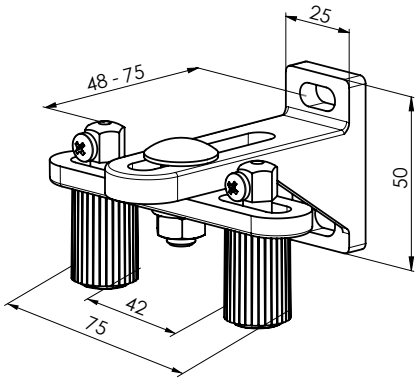

Double cable guide, 70 - 130 mm P032/8 (2-01652)

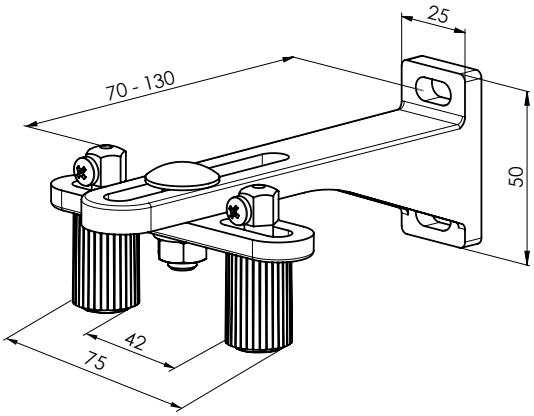

Double cable guide, 90 - 165 mm P032/9 (2-01651)

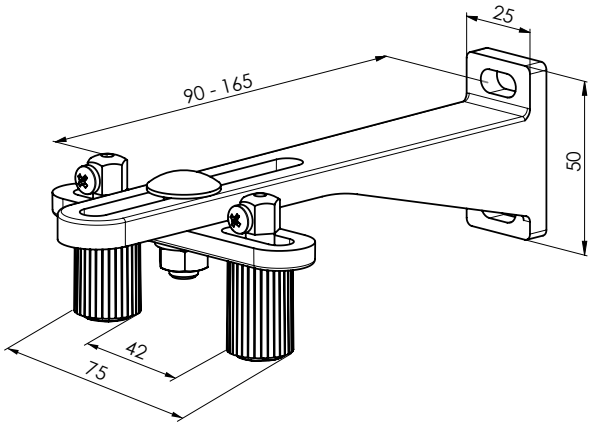

Double cable guide, 120 -200 mm P032/10 (2-01650)

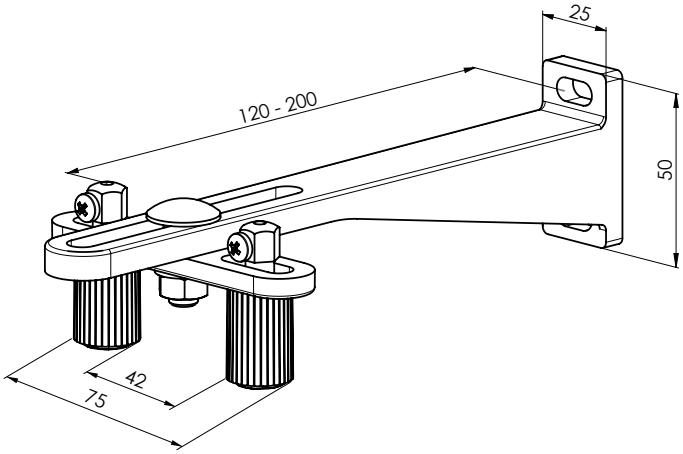

Stretching square P043/1 (6-011032)

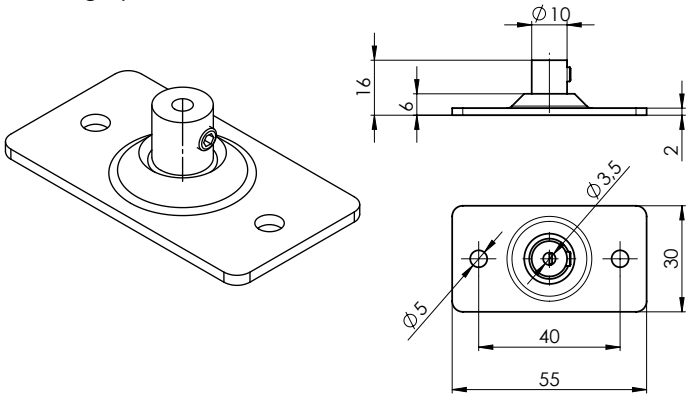

Type of wire guide	Distance between wire and window frame (mm)
Corner wire guide P031/6	25-46
Corner wire guide P031	39-60
Corner wire guide P031/1	49-70
Single cable guide P032/1	20-40
Single cable guide P032/2	30-75
Single cable guide P032/3	70-130
Single cable guide P032/4	90-165
Single cable guide P032/5	120-200
Double cable guide P032/6	40
Double cable guide P032/7	48-75
Double cable guide P032/8	70-130
Double cable guide P032/9	90-165
Double cable guide P032/10	120-200
Corner wire guide P031/5	63

Bracket for wire AF 81 P 044 (6-011063)

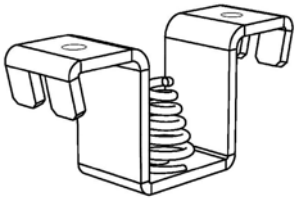

Used combined with P 043/1 Tension Angle. Eliminates expansion (summer/winter).

Bracket for wire (2-01515-xxxx-0)

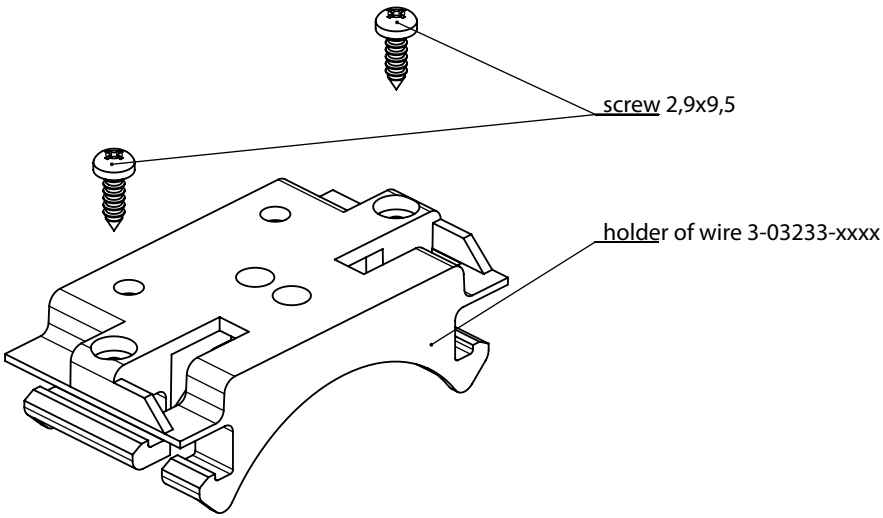

Wire guide - attachment methods

Channel 56 x 58

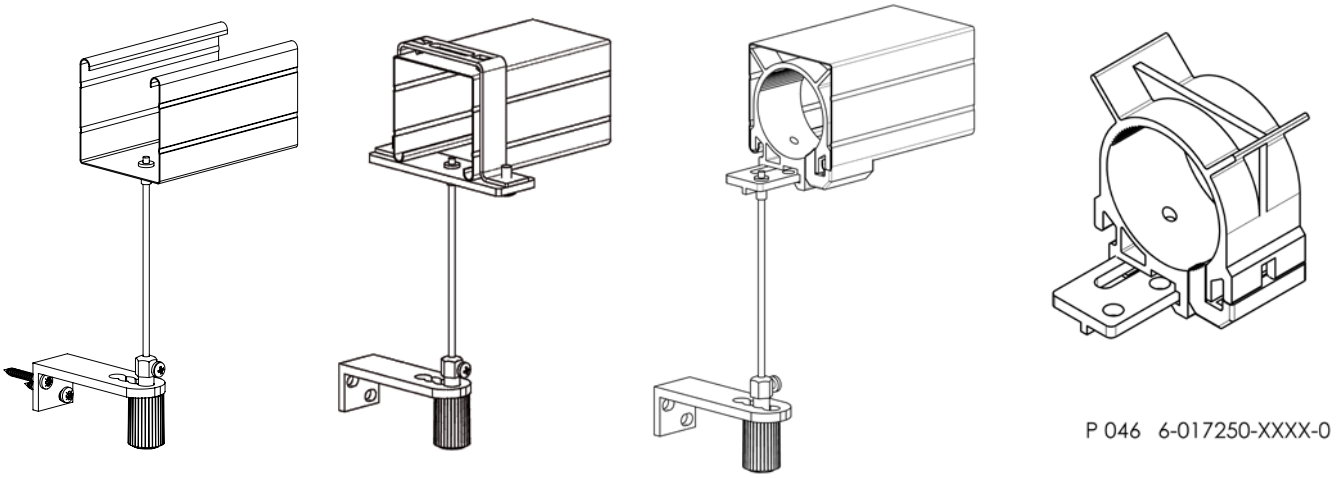

P 046 6-017250-XXXX-0

Channel 40x40

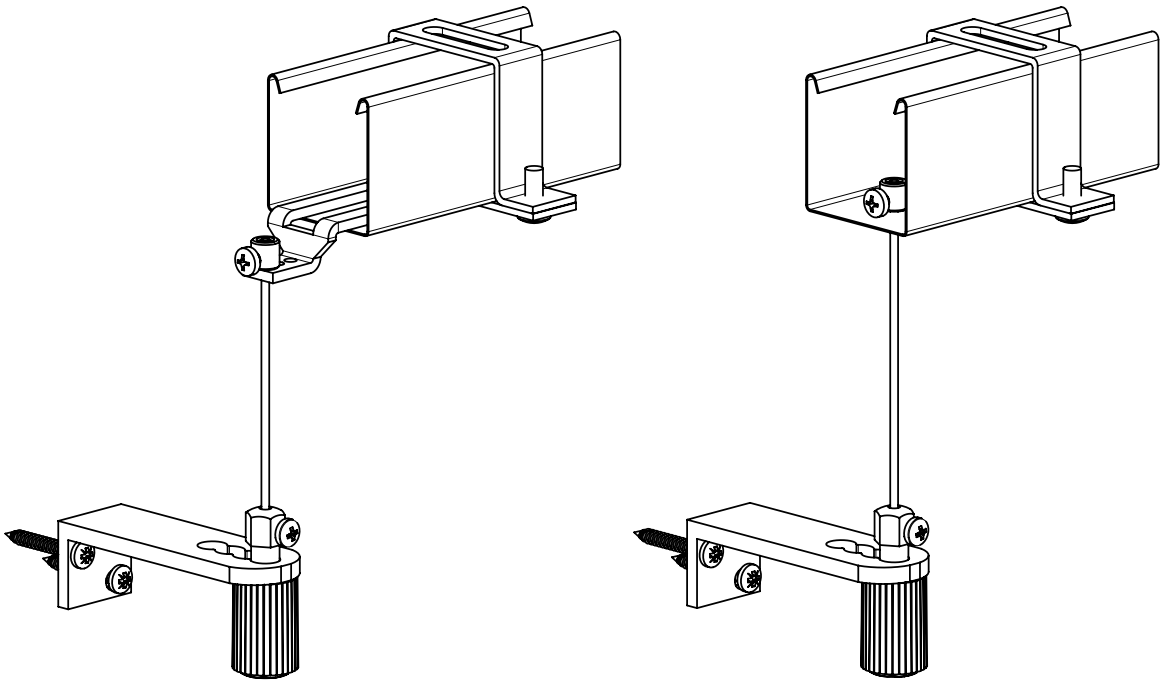

Wireholder Fe P002/7 (2-01128)
(for head rail 56x58)

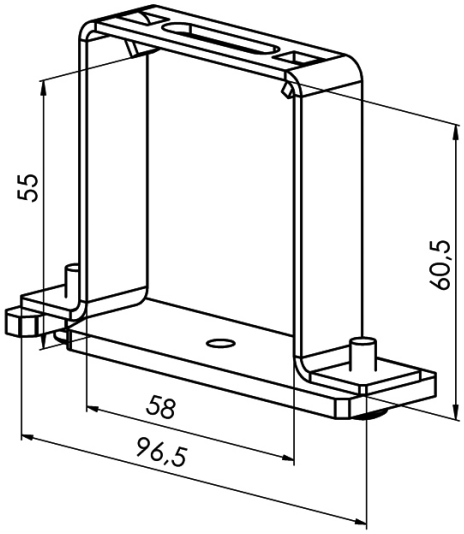

Wireholder Al P002/8 (2-01294)
(for head rail 58x60)

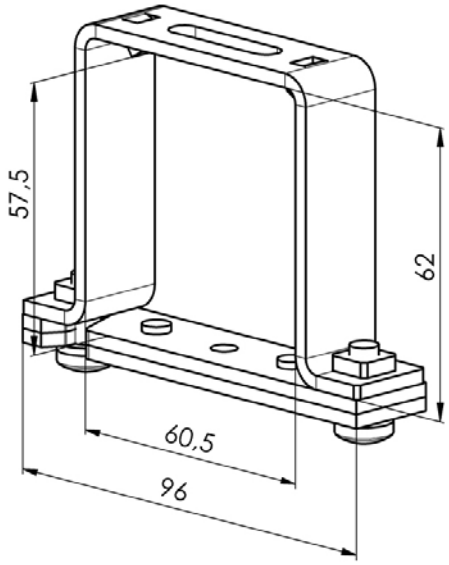

Head rail section hanger Fe for cord guide (2-00685)
(for Head Rail 56x58)

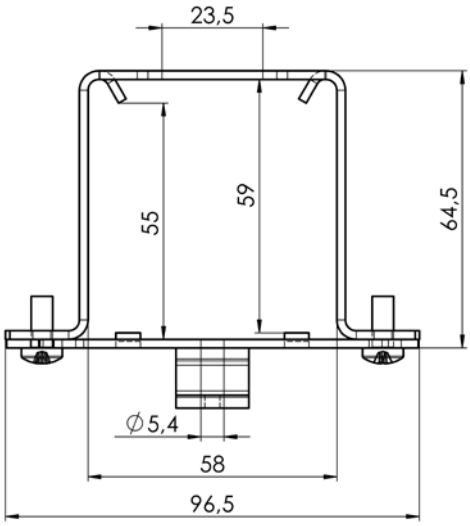

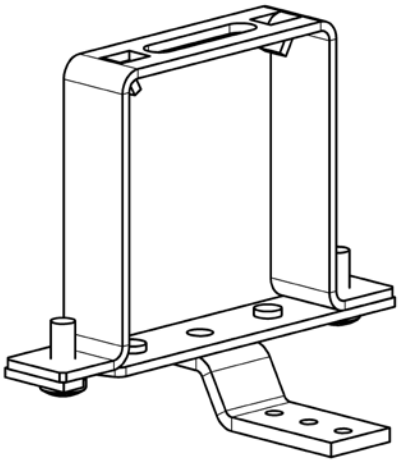

Guide P534/1 (7-301796)
for negative (-) axis (-10 ≥ -32)

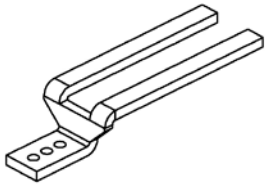

GEIGER plastic gear
holder with cord binding (6-017250)

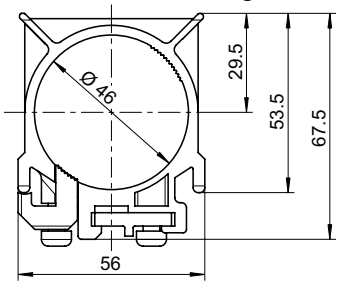

Clamping screw P507 (6-001229)
for wire P 501 (2,2 mm) (C50)





Guidance - Guiding Channel

Guiding channels applies to: Cetta 60 Flexi, Cetta 65, Cetta 80, Cetta 80-Flexi, Cetta 80-Slim, Zetta 70, Zetta 90, Setta 65, Setta 90

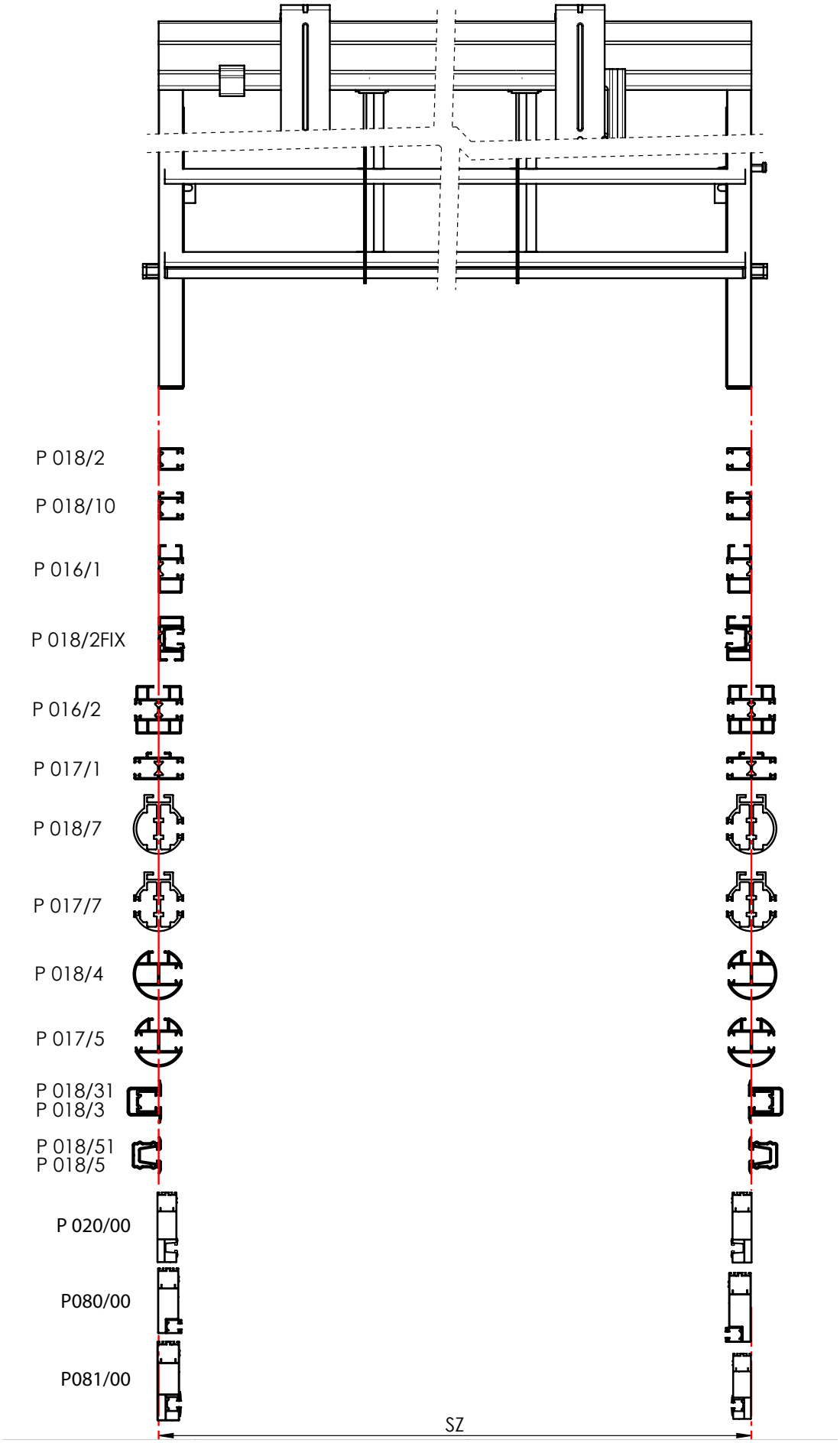

Single Guiding Channel P 018/2 (7-302122)
for installation in lining (without use of ejector)

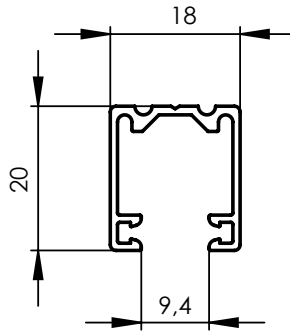

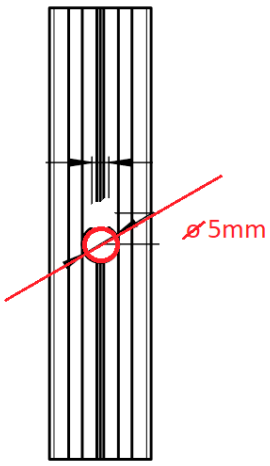

Single Guiding Channel P 018/10 (7-302363)
For installation on the frame using a guide rail holder.

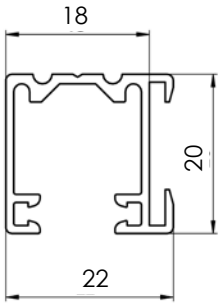

Self-Supporting Guiding Channel P 016/1 (7-302121)

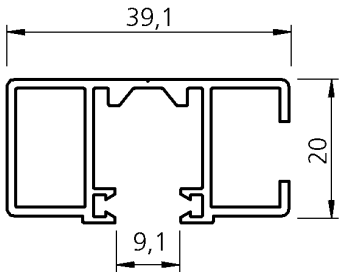

Head rail section hanger with holder P 002/42 for guide channel P 016/1

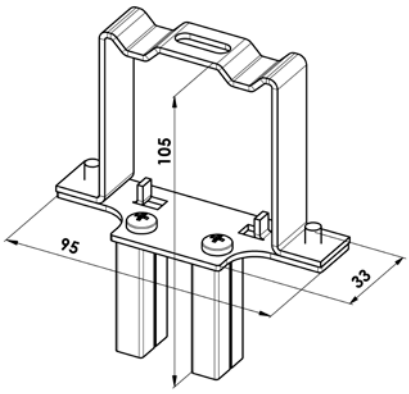

Shutter P 002/41 (2-00588) for guide channel P 016/1 and P 016/2

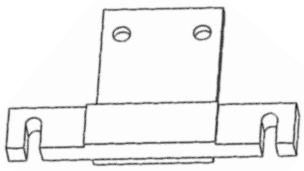

Duble Guiding Channel STS P 016/2 (7-303530)

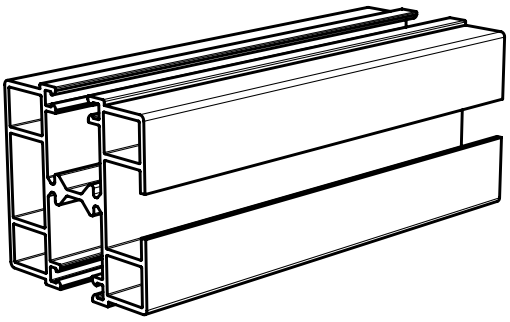

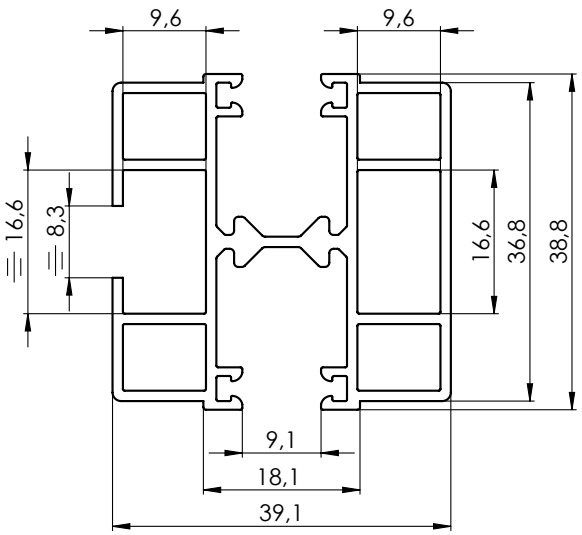

Head rail sectin hanger with holder (Fe) P 002/14 (2-01684) for STS
Double Guiding Channel P 016/2

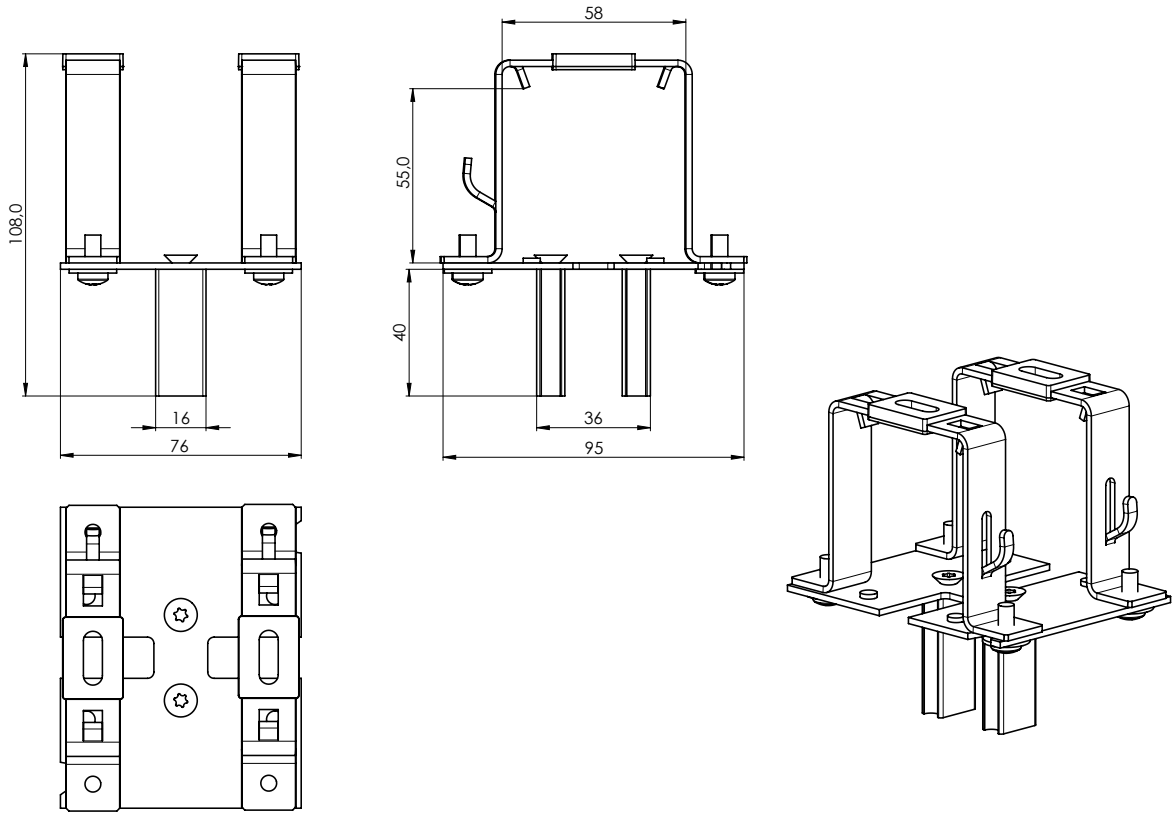

Head rail sectin hanger with holder (Al) P 002/9 (2-01628) for STS Double Guiding Channel P 016/2

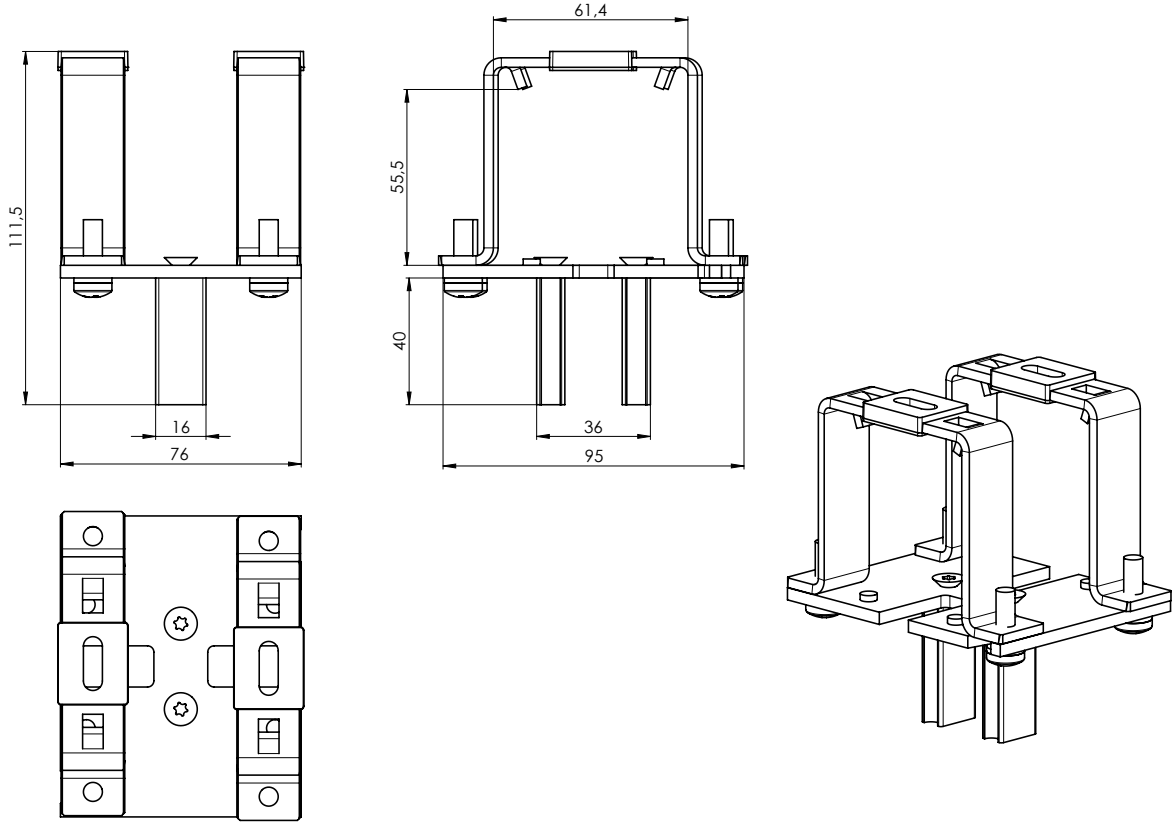

Double Guiding Channel
P 017/1 (7-302123)
for installation on frame
and facade (with use of ejector)

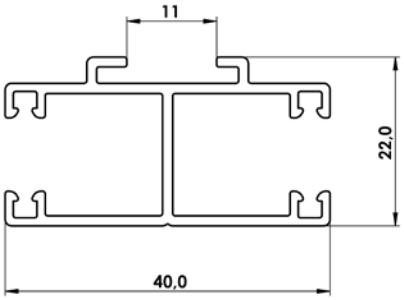

Single-Sided Round Channel
P 018/4 (6-010533)

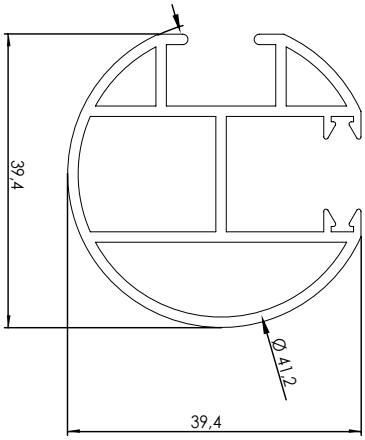

Double-Sided Round Guiding Channel
P 017/5 (6-010532)

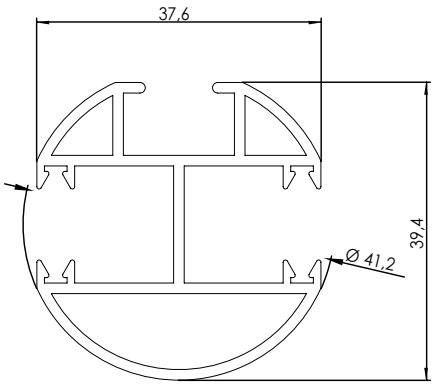

Single-Sided Round Channel P 018/7 (7-302154)

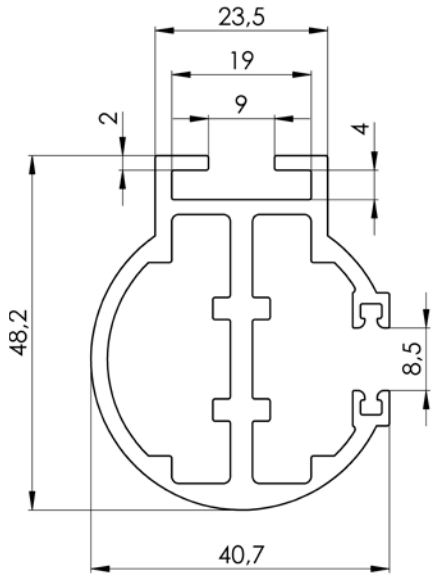

Double-Sided Round Guiding Channel P 017/7 (7-302155)

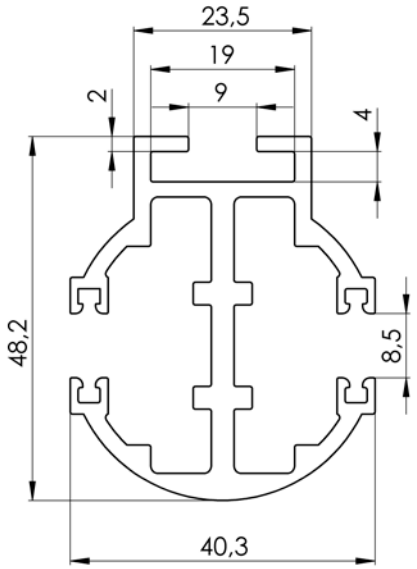

Under-plaster case P018/31 (3-01419-0000) with giude rail P 018/3X (7-302234-PU52)

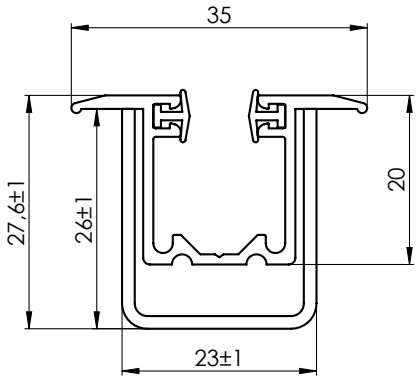

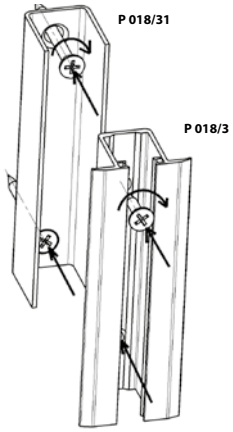

Under-plaster case P 018/51 (7-30781, Al) with giude rail P 018/5 (7-301782, PVC)

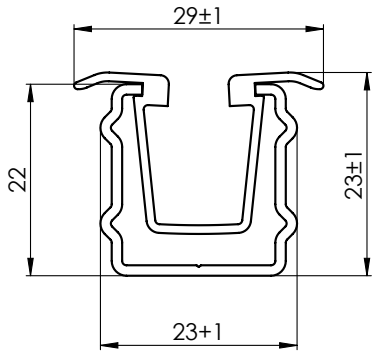

Guiding channel under plastering is cut in 2 parts (300 mm from the top edge of the guiding channel) and is joined by the side guide channel insertion (kedr) due to its fitting on the blind pin and the correct guiding into the guide rail housing. The side guide channel insertion (kedr) is the entire height of the guide rail.

P 020/00vrO
P 020/00vrR

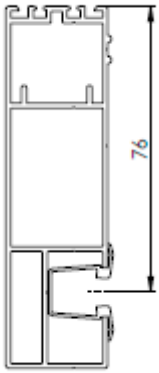

P 080/00vrO
P 080/00vrR

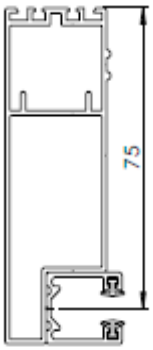

P 081/00vrO
P 081/00vrR

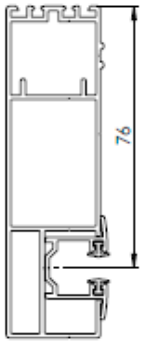

Expanding profiles– see Technical Manual – Exterior Venetian Blinds - STS
The P 020/00 guide rail is supplied for blinds with a maximum height of 4000 mm.

Guiding Channel Holders

For guiding channel P 017/1, P 018/10

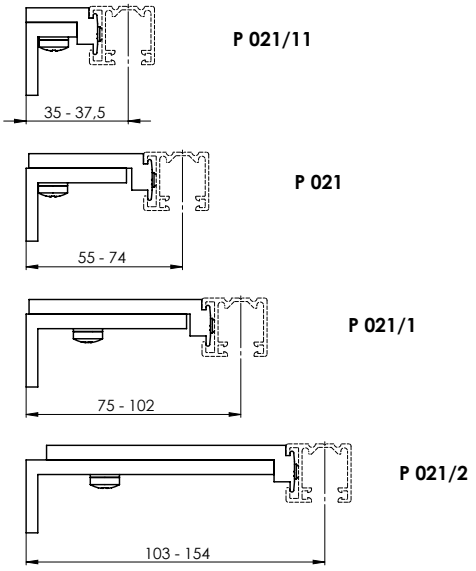

P 021/11

P 021

P 021/1

P 021/2

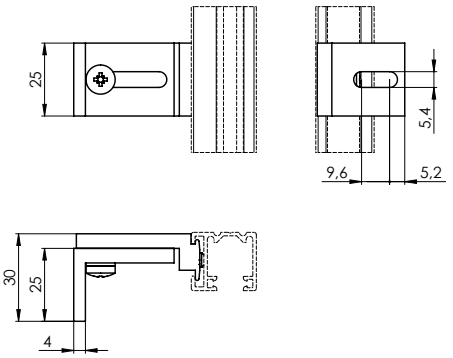

Telescopic guiding channel holder , P021/3 (2-00401)
for guiding channel P 017/1, P 017/5, P 018/10, P 018/4

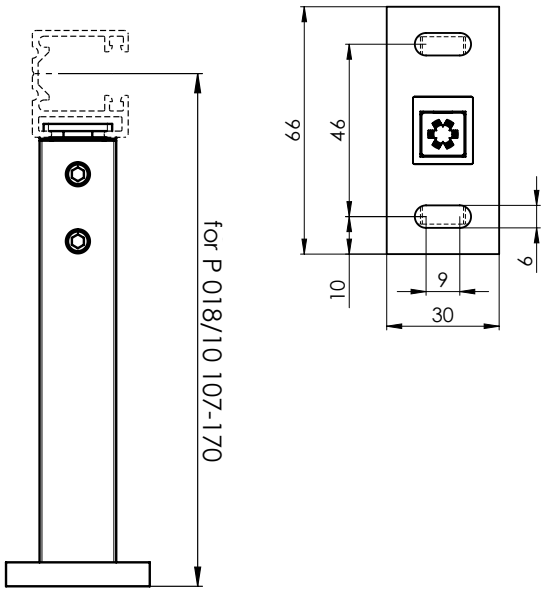

Telescopic guiding channel holder, P021/4 (2-00402)
for guiding channel P 017/1, P 017/5, P 018/10, P 018/4

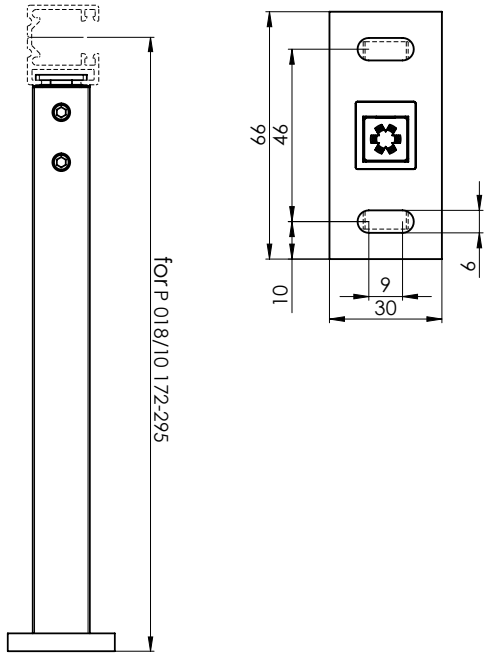

Telescopic guiding channel holder STS, P021/5 (2-00582)
for guiding channel P 016/1, P 017/1, P 017/5, P 018/10, P 018/4

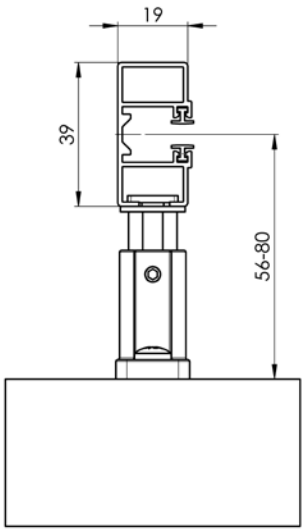

Telescopic guiding channel holder STS, P021/6 (2-00583)
for guiding channel P 016/1, P 017/1, P 017/5, P 018/10, P 018/4

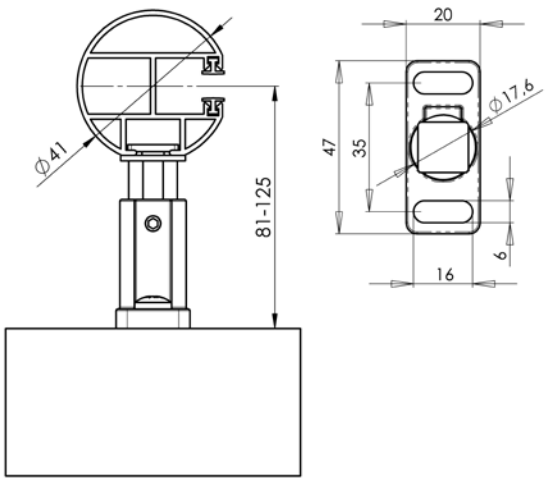

Guiding Channel Holders

Guiding channel holder 055 - 74 mm Zn P021/50 (2-01818-PU11)

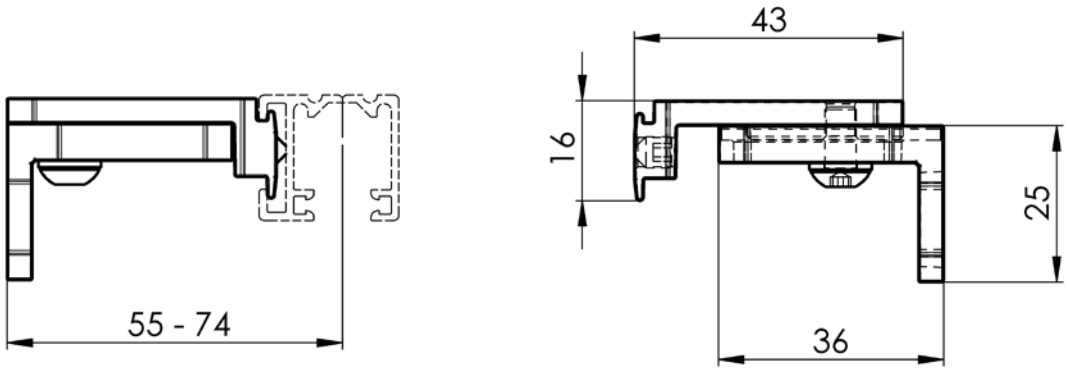

Guiding channel holder 074 – 105 mm Zn P021/51 (2-01860-PU11)

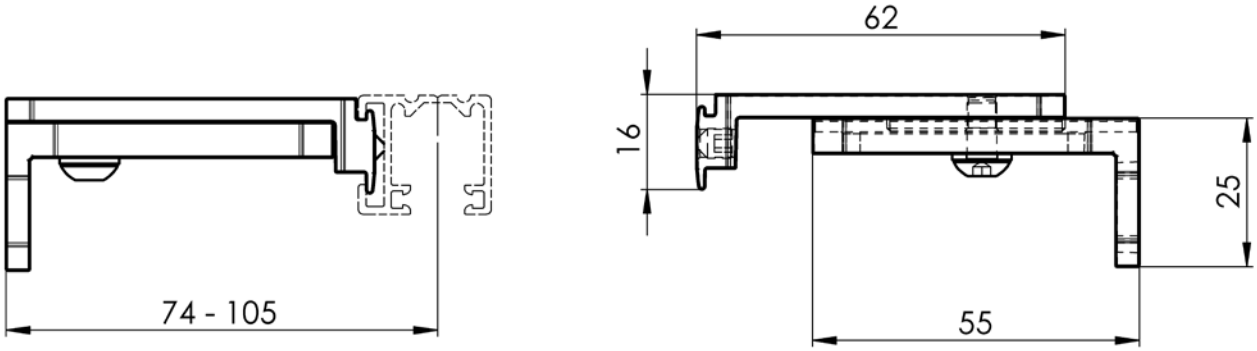

Guiding channel holder 105 - 155 mm Zn P021/55 (2-01861-PU11)

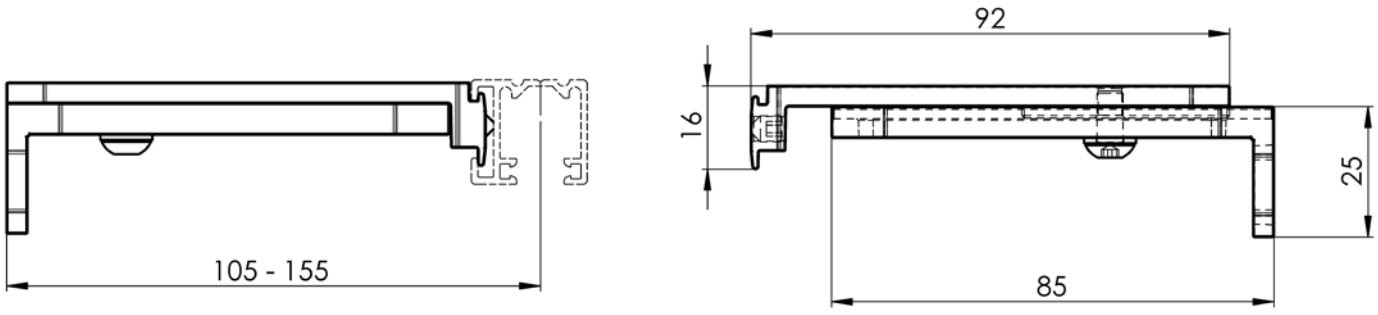

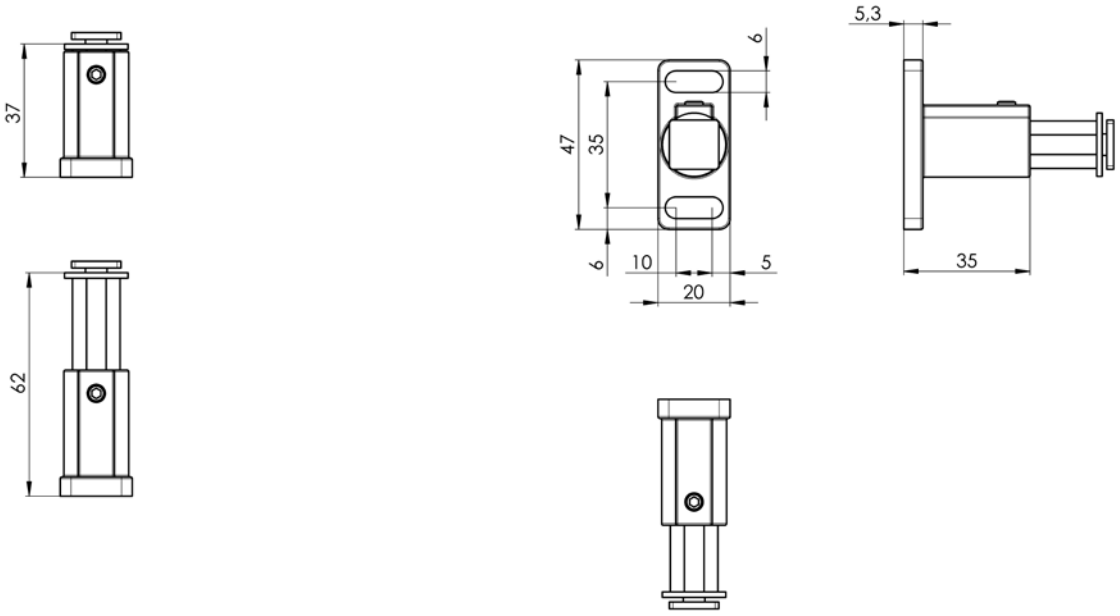

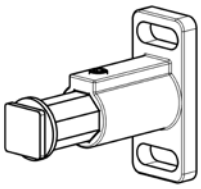

Telescopic guiding channel holder STS, P021/5

2-00582-XXXX-0

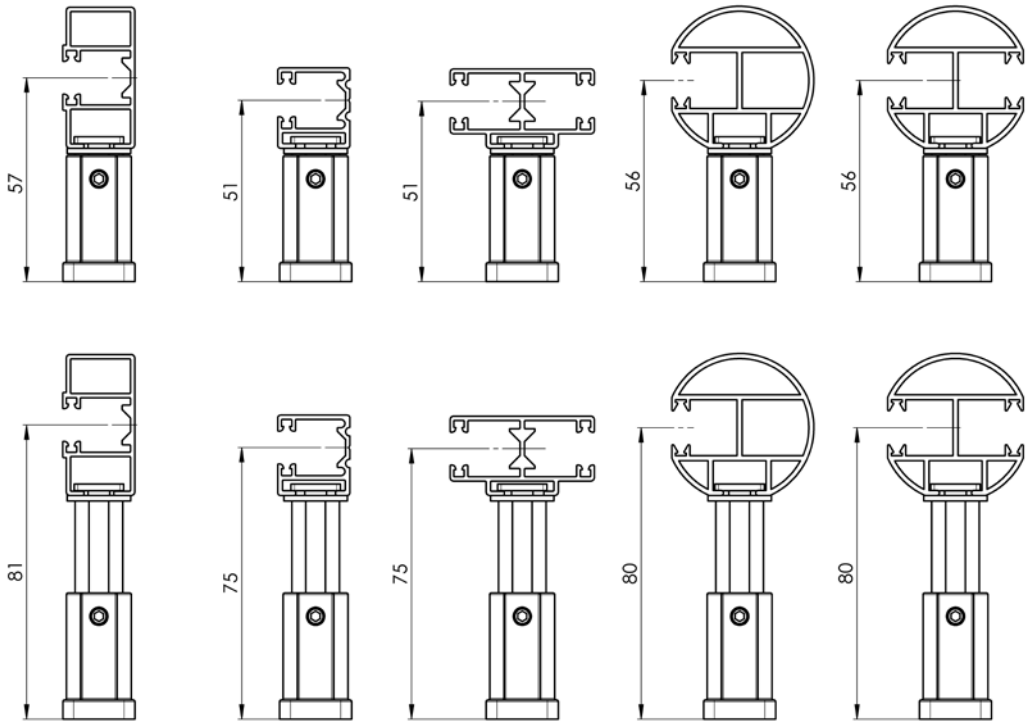

for P 016/1 for P 018/10 for P 017/1 for P 018/4 for P 017/5

Telescopic guiding channel holder STS, P021/5

2-00582-XXXX-0

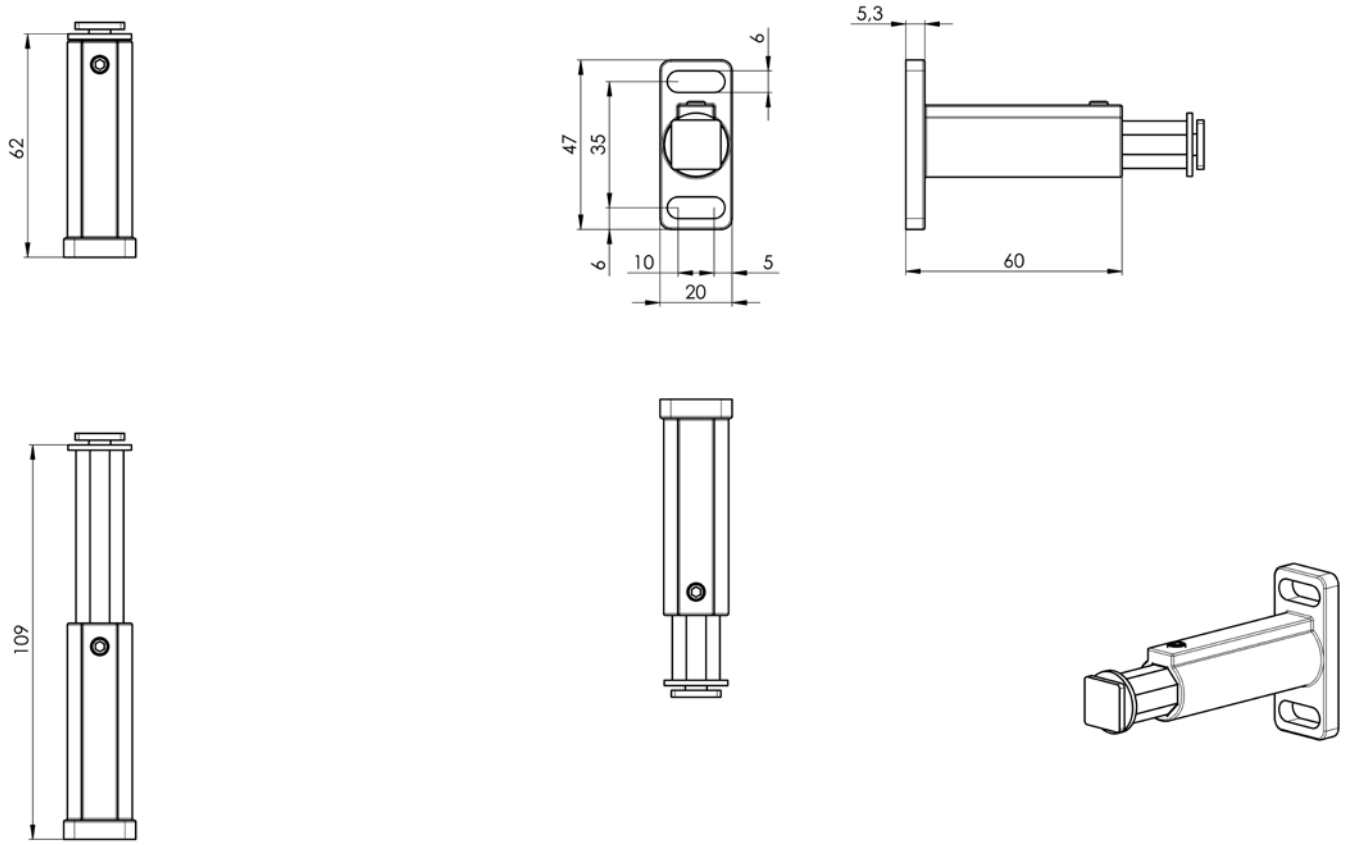

Telescopic guiding channel holder STS, P021/6 2-00583-XXXX-0

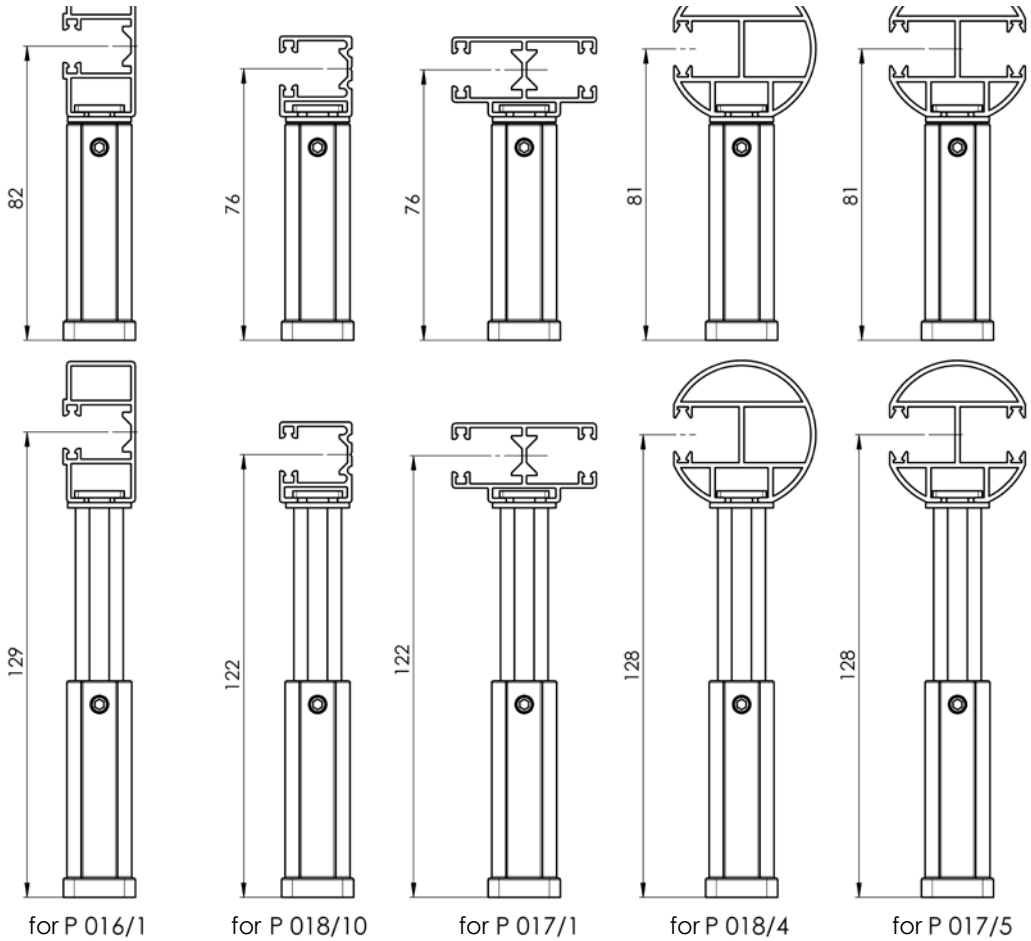

Telescopic guiding channel holder STS, P021/6 2-00583-XXXX-0

Guiding Channel Holders

Telescopic guiding channel holder, P050/01 (2-01027), P050/02 (2-01028), P050/03 (2-01029) for guiding channel P017/1 a P018/10

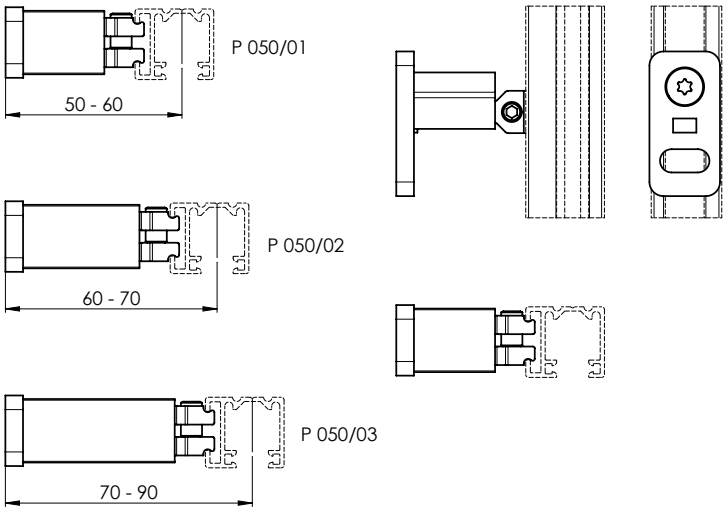

Guide rail locking holder

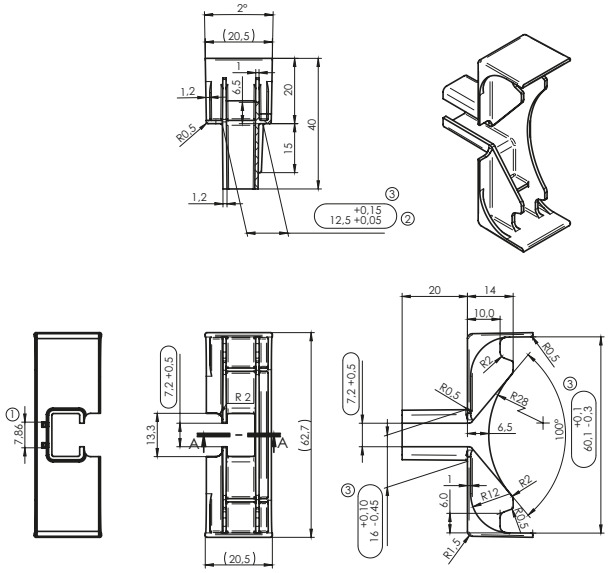

Telescopic guiding channel holder, P050/04 (2-01030), P050/05 (2-01031), P050/06 (2-01032), P050/07 (2-01033), P050/08 (2-01034), P050/09 (2-01035), P050/10 (2-01036) for guiding channel P017/1 a P018/10

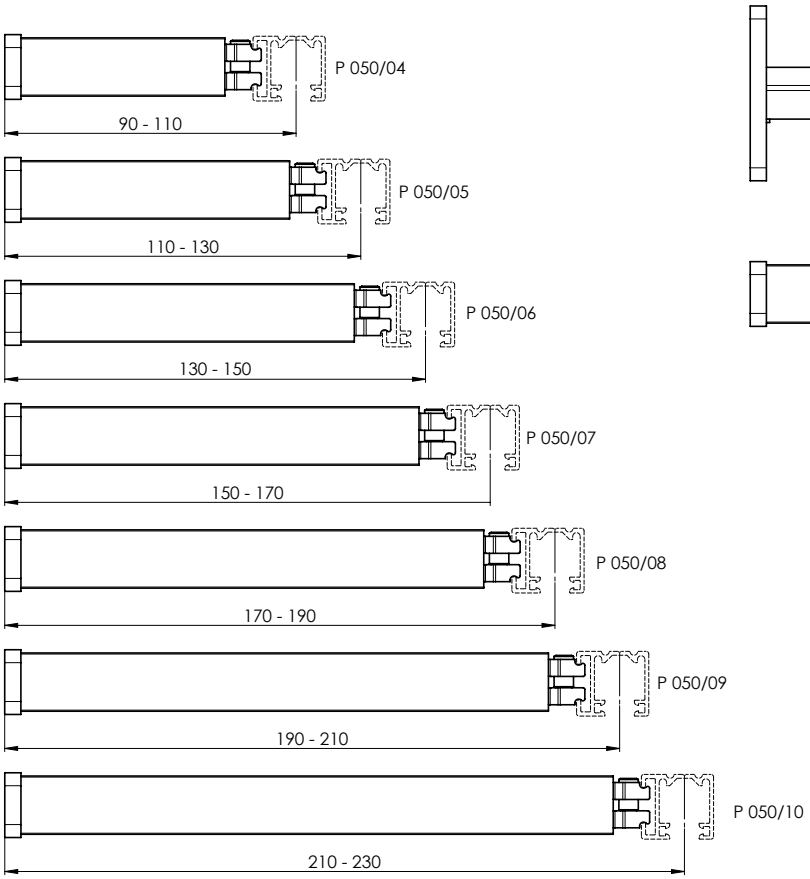

Guide Rail Brackets for Balcony Assemblies

Double Guide Rail Bracket, P050/11 (2-02006), P050/12 (2-02007), for two P018/10 guide rails mounted side by side

P050/11

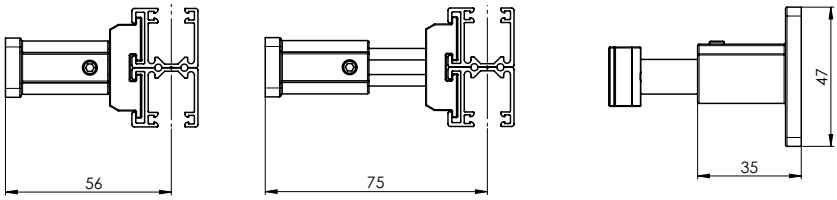

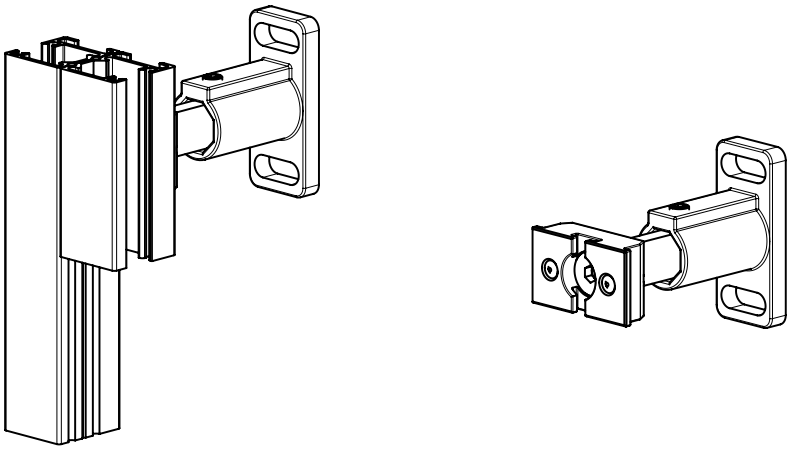

P050/12

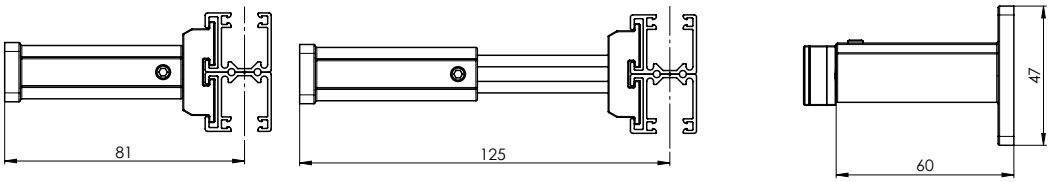

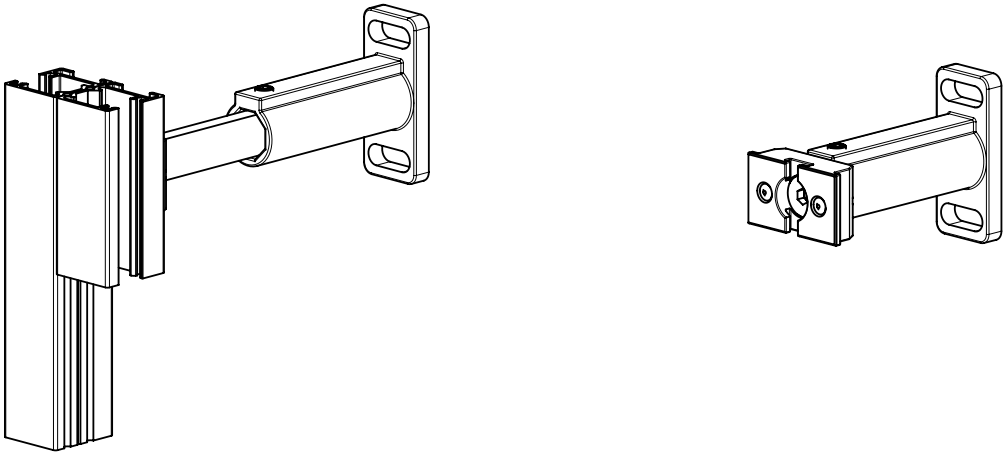

Guiding Channel Holders

All types of the brackets are identical for both types of the square profiles.

P 100 square profile

Applies to all types of blinds except for S90, Z90 a C100.

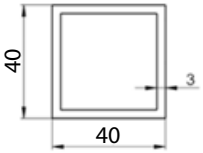

P 100/1 square profile

Applies to S90, Z90 and C100 only.

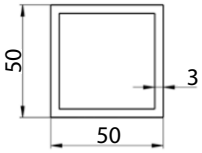

Guiding channel corner bracket exterior 70 -80 P 098/0 (2-01150-PU11)

For extension of 70mm is the measured width (SZ) 39mm bigger. With each extension of 1 mm, increases also the width by 1 mm.

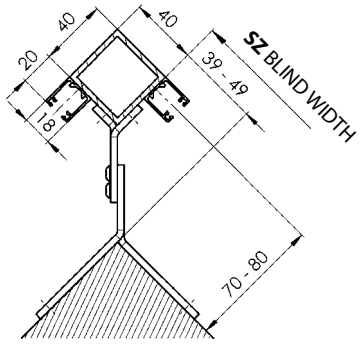

70 --> 39 mm
71 --> 40 mm
72 --> 41 mm
73 --> 42 mm
74 --> 43 mm
75 --> 44 mm
76 --> 45 mm
77 --> 46 mm
78 --> 47 mm
79 --> 48 mm
80 --> 49 mm

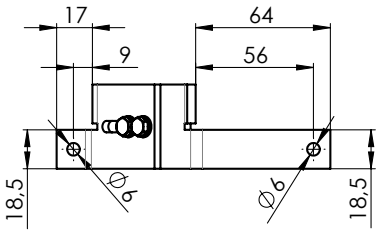

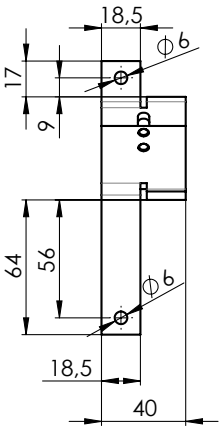

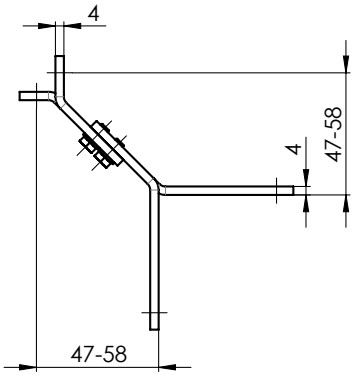

In case of the 40×40 mm profile, 70 mm is the minimum distance between the guide axis and the anchor plane!

Guiding channel corner bracket exterior 80 – 100 P 098/1 (2-01151-PU11)

For extension of 80mm is the measured width (SZ) 49mm bigger. With each extension of 1 mm, increases also the width by 1 mm.

80 --> 49 mm
81 --> 50 mm
.
.
.
90 --> 59 mm
91 --> 60 mm
.
.
.
99 --> 68 mm
100 --> 69 mm

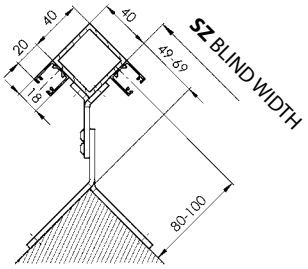

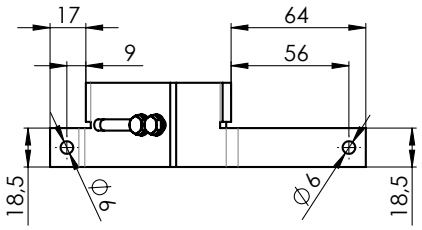

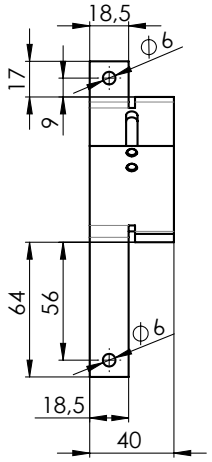

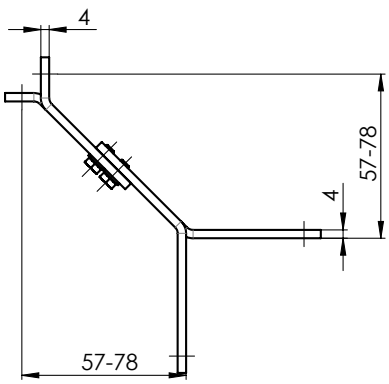

Guiding channel corner bracket exterior 100 – 140 P 098/2 (2-01152-PU11)
For extension of 100mm is the measured width (SZ) 69mm bigger. With each extension of 1 mm, increases also the width by 1 mm.

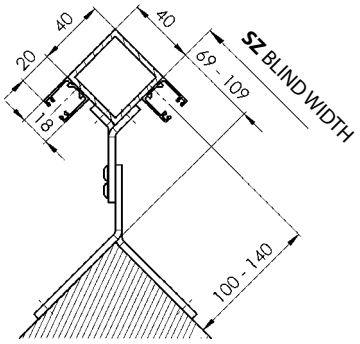

100 --> 69 mm
101 --> 70 mm
.
.
.
120 --> 89 mm
121 --> 90 mm
.
.
.
139 --> 108 mm
140 --> 109 mm

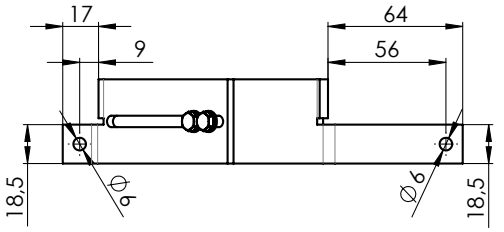

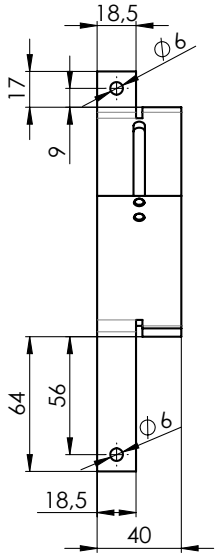

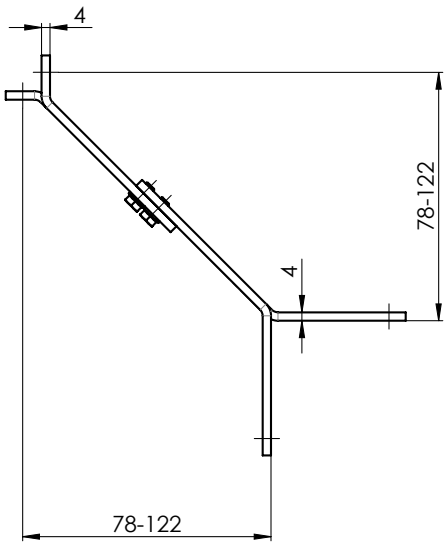

Guiding channel corner bracket exterior 68-74 P 098/3 (2-01807-PU11)
For extension of 68mm is the measured width (SZ) 27 mm bigger. With each extension of 1 mm, increases also the width by 1 mm.

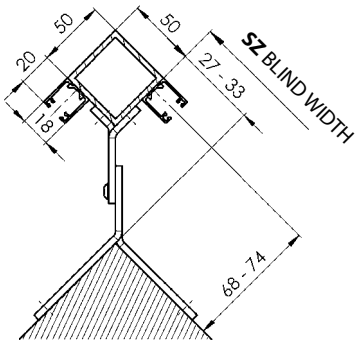

68 --> 27 mm
69 --> 28 mm
70 --> 29 mm
71 --> 30 mm
72 --> 31 mm
73 --> 32 mm
74 --> 33 mm

Guiding channel corner bracket interior 45-58 P 099/0 (2-01154-PU11)

For extension of 45mm is the measured width (SZ) 39mm shorter. With each extension of 1 mm, decreases also the width by 1 mm.

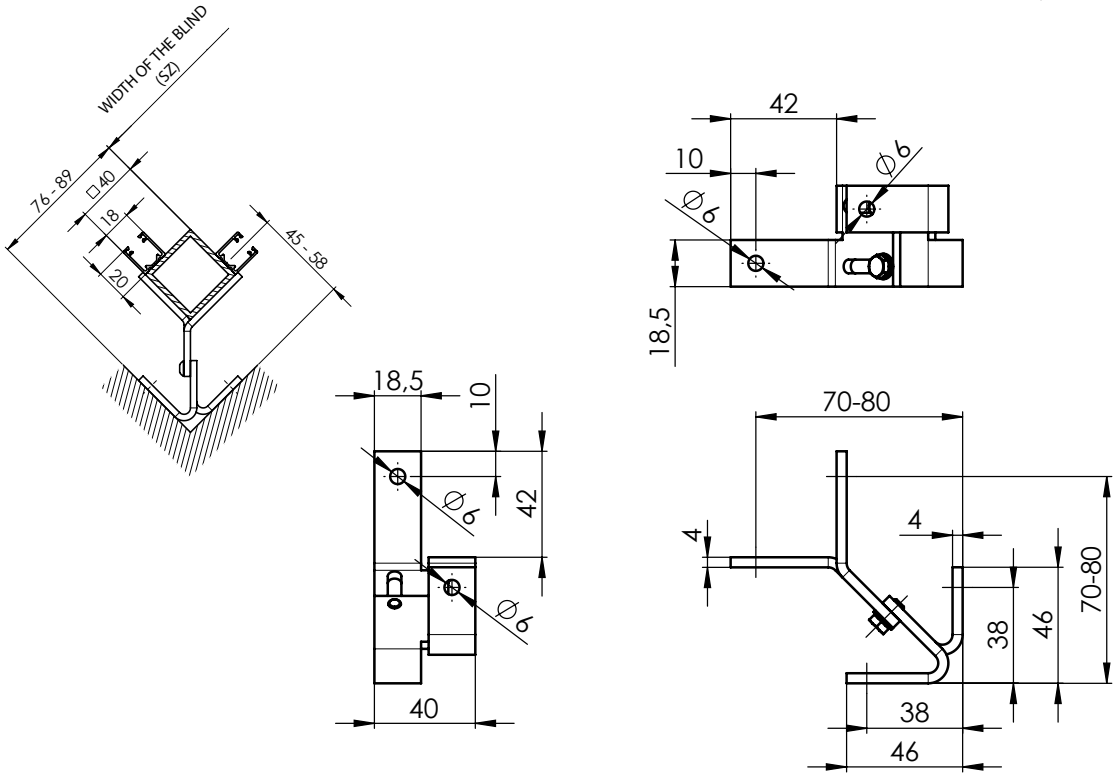

Guiding channel corner bracket interior 58-76 P 099/1 (2-01155-PU11)

For extension of 58 mm is the measured width (SZ) 87mm shorter. With each extension of 1 mm, decreases also the width by 1 mm.

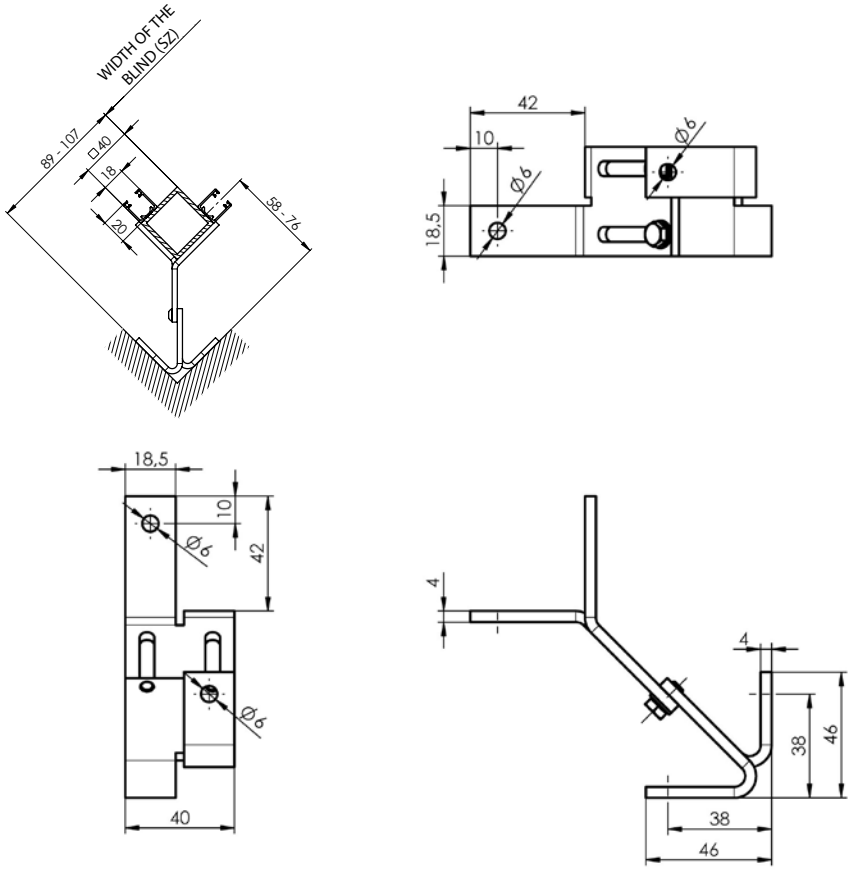

Guiding channel corner bracket interior 76-117 P 099/2 (2-01156-PU11)

For extension of 98 mm is the measured width (SZ) 107 mm shorter. With each extension of 1 mm, decreases also the width by 1 mm.

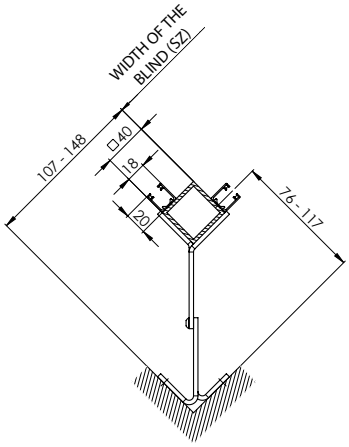

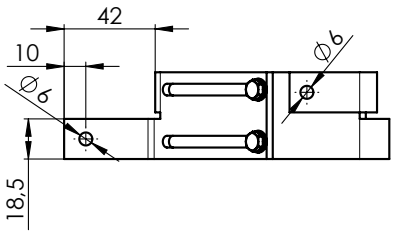

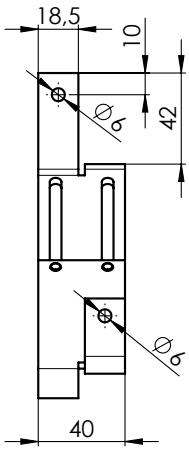

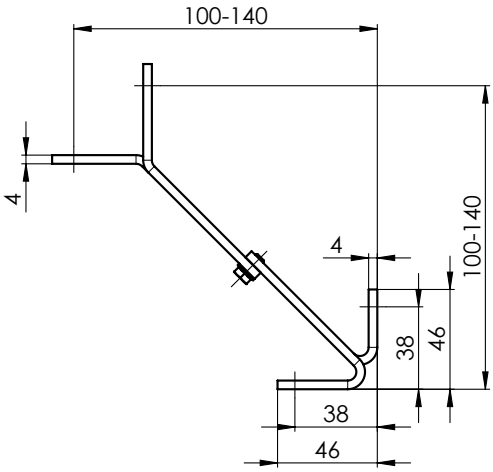

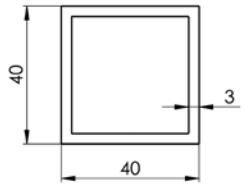

Guiding Channel Holders only for S90, Z90 and C100

Guiding channel corner bracket exterior 80-90 P098/4 2-01943-PU11

For extension of 80 mm is the measured width (SZ) 39 mm bigger. With each extension of 1 mm, increases also the width by 1 mm.

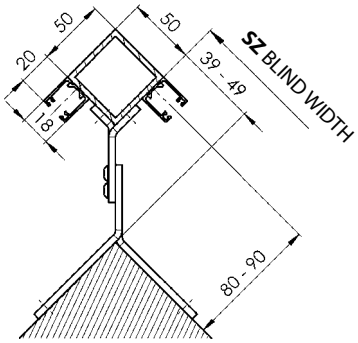

80 --> 39 mm
81 --> 40 mm
82 --> 41 mm
83 --> 42 mm
84 --> 43 mm
85 --> 44 mm
86 --> 45 mm
87 --> 46 mm
88 --> 47 mm
89 --> 48 mm
90 --> 49 mm

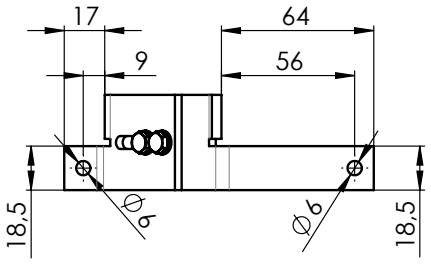

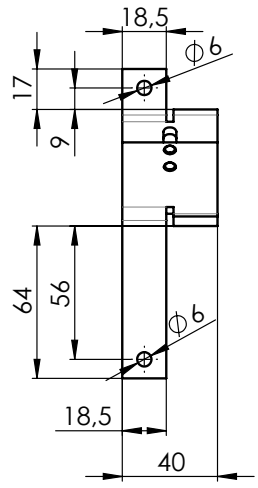

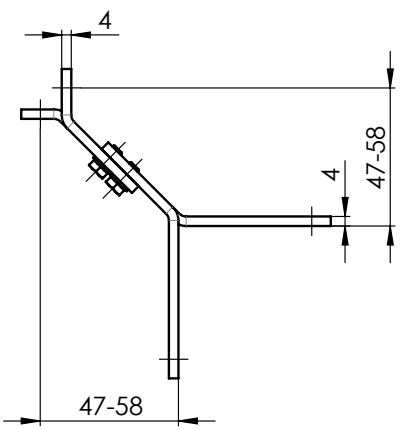

Guiding channel corner bracket exterior 90-110 P098/5 2-01944-PU11

For extension of 90 mm is the measured width (SZ) 49 mm shorter. With each extension of 1 mm, decreases also the width by 1 mm.

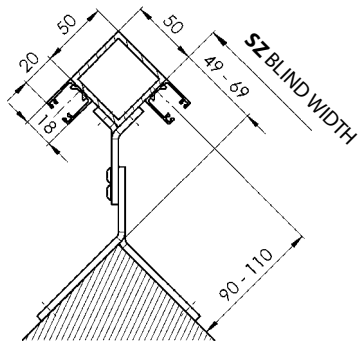

90 --> 49 mm
91 --> 50 mm
.
.
.
100 --> 59 mm
101 --> 60 mm
.
.
.
109 --> 68 mm
110 --> 69 mm

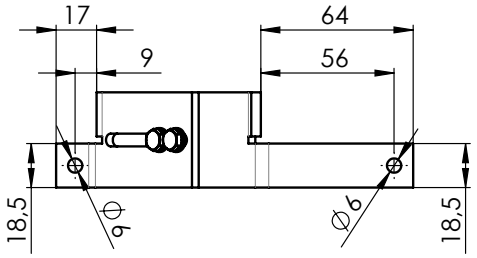

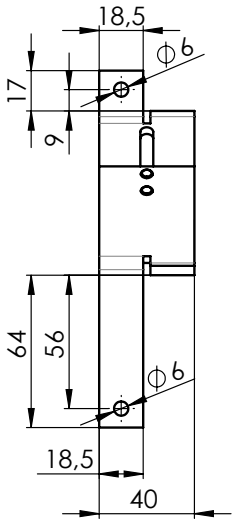

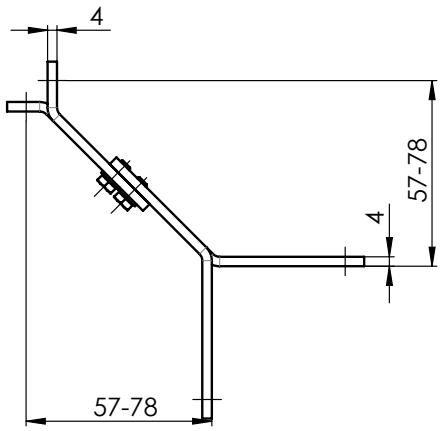

Guiding channel corner bracket exterior 110-150 P098/6 2-01945-PU11

For extension of 110 mm is the measured width (SZ) 69 mm shorter. With each extension of 1 mm, decreases also the width by 1 mm.

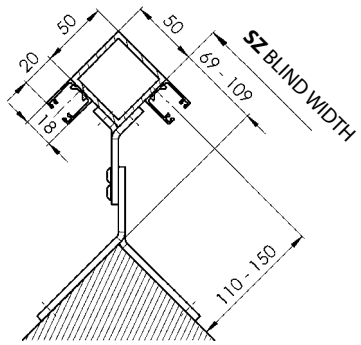

110 --> 69 mm
111 --> 70 mm
.
.
.
130 --> 89 mm
131 --> 90 mm
.
.
.
149 --> 108 mm
150 --> 109 mm

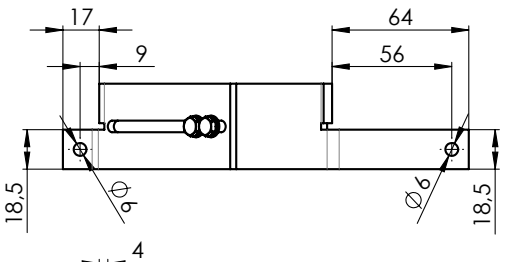

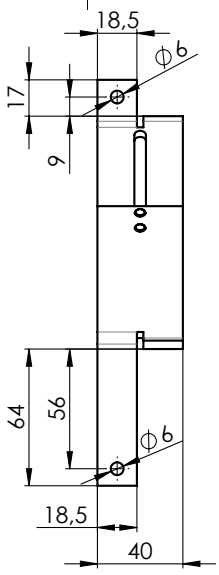

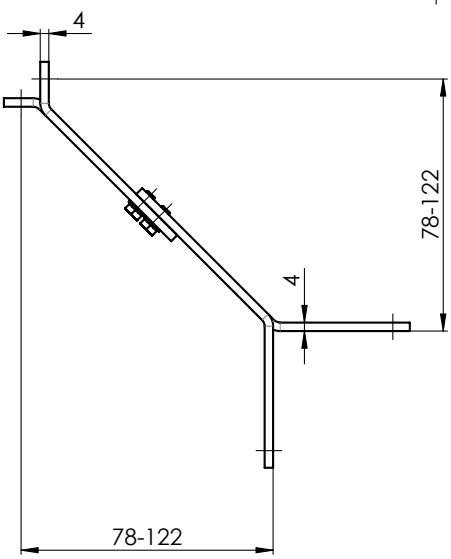

Guiding channel corner bracket interior 45-58 P099/0 2-01154- PU11

For extension of 45 mm is the measured width (SZ) 86 mm shorter. With each extension of 1 mm, decreases also the width by 1 mm.

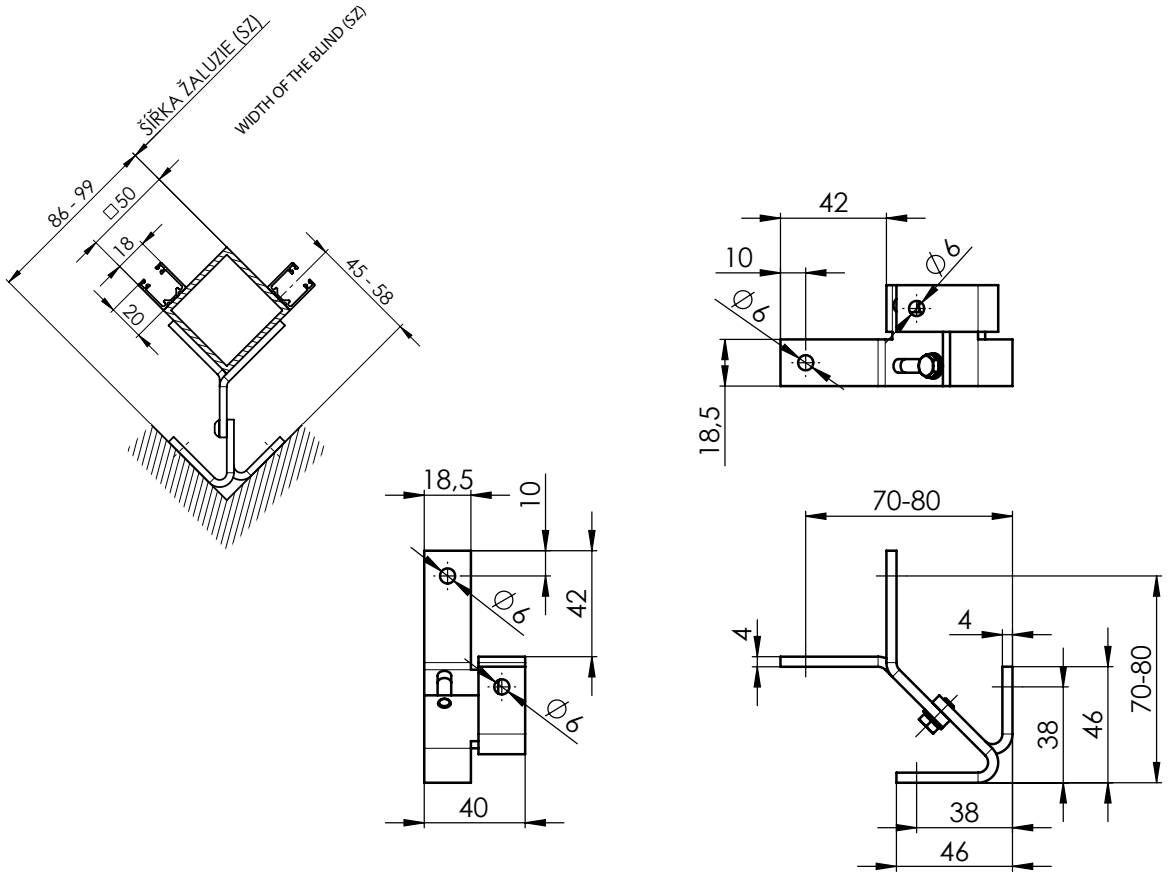

Guiding channel corner bracket interior 58-76 P099/1 2-01155- PU11

For extension of 58 mm is the measured width (SZ) 99 mm shorter. With each extension of 1 mm, decreases also the width by 1 mm.

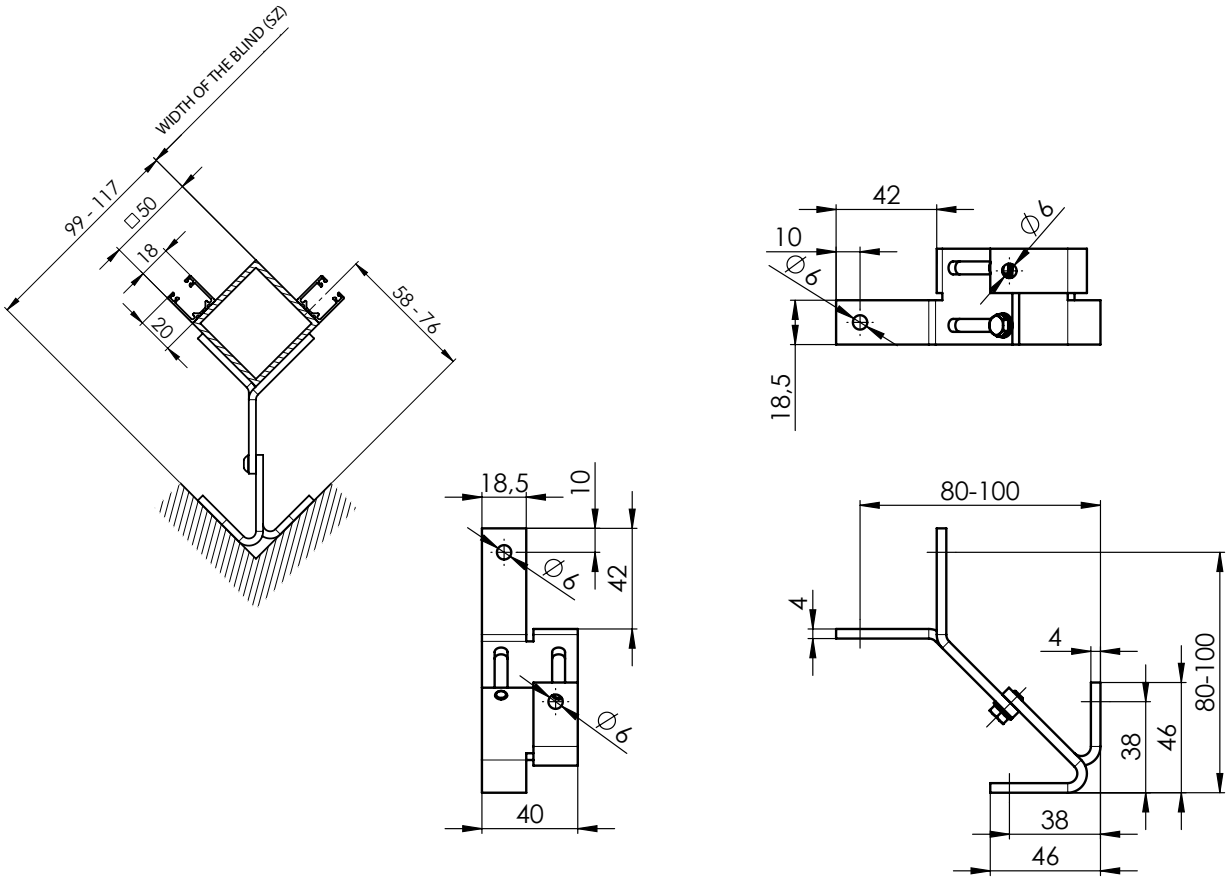

When using the 40×40 mm square tube, the minimum distance between the centre of the rail and the carrier anchor plane is 70 mm; an in case of the 50×50 mm square tube, the distance is 80 mm.

Guiding channel corner bracket interior 76-117 P099/2 2-01156- PU11

For extension of 76 mm is the measured width (SZ) 117 mm shorter. With each extension of 1 mm, decreases also the width by 1 mm.

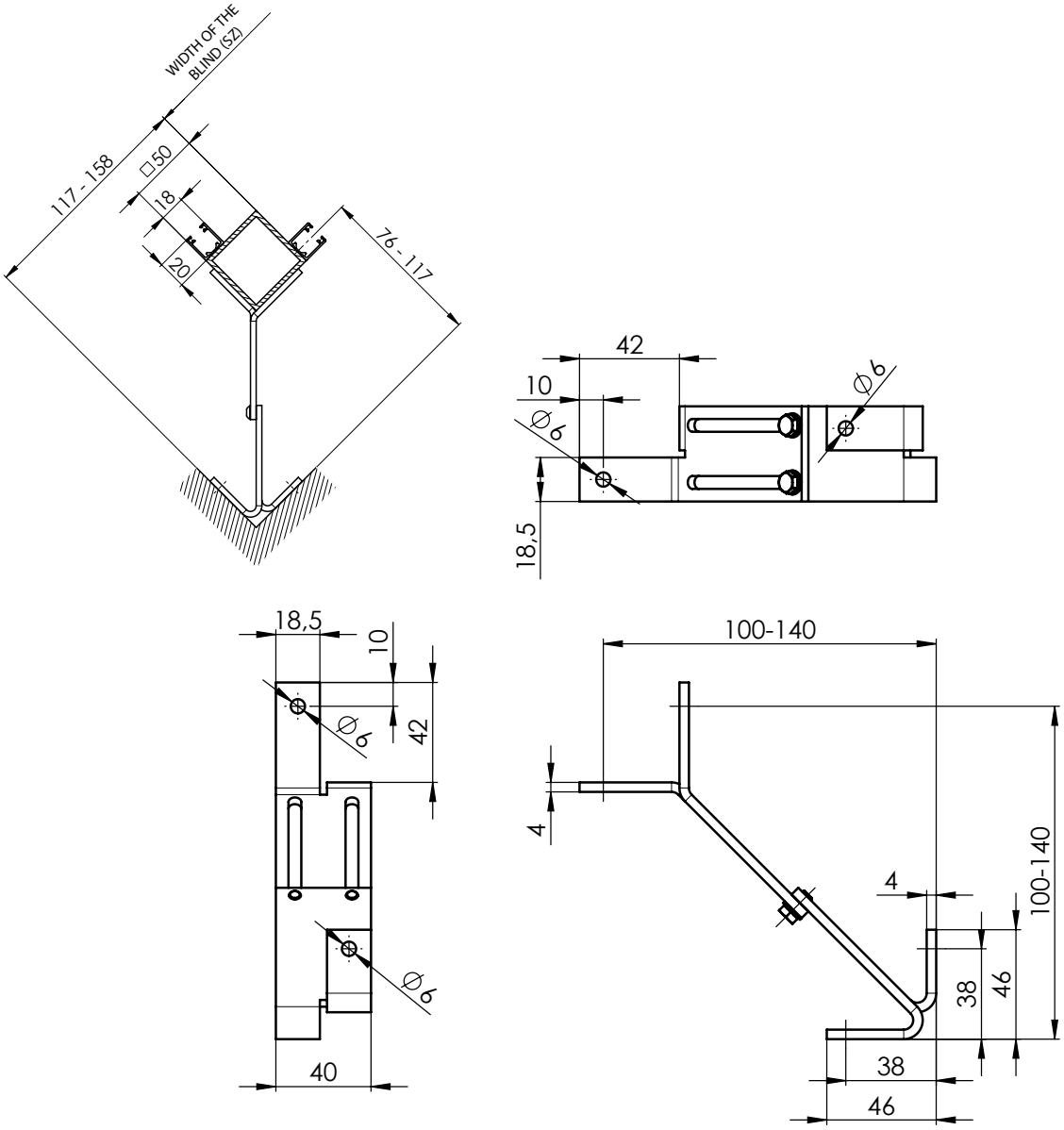

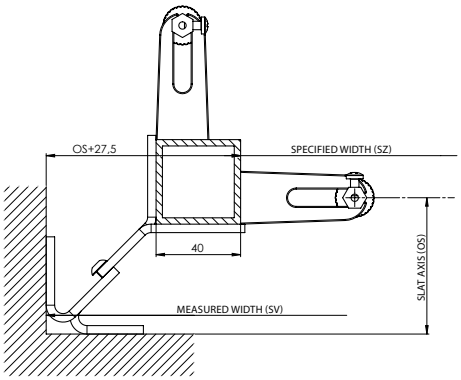

SZ=SV-(OS+27,5)

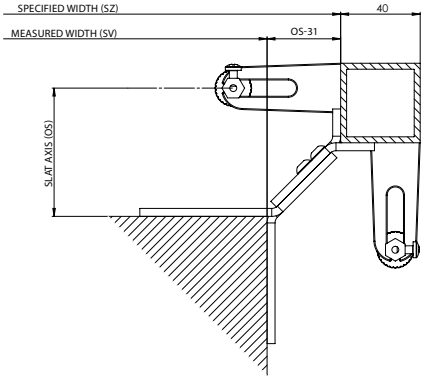

SZ=SV+(OS-27,5)

Measurement - channel

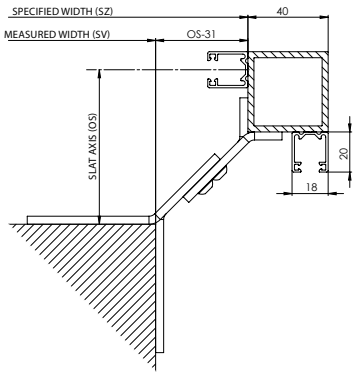

SZ=SV+(OS-31)

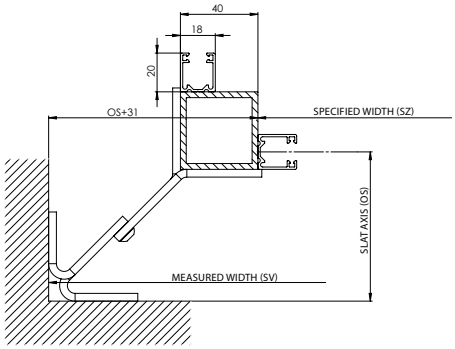

SZ=SV-(OS+31)

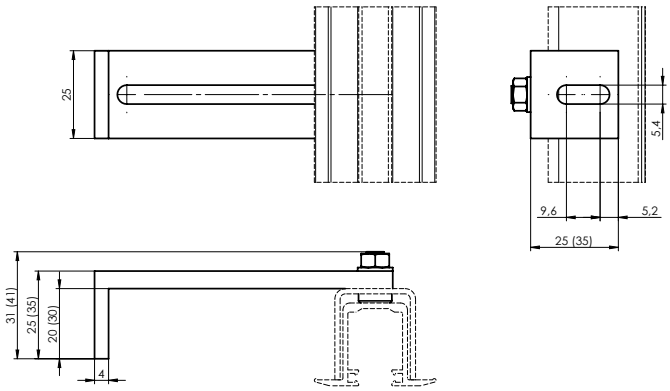

Guiding Channel Holder 20-80 P 047/1 2-01318-0000-2

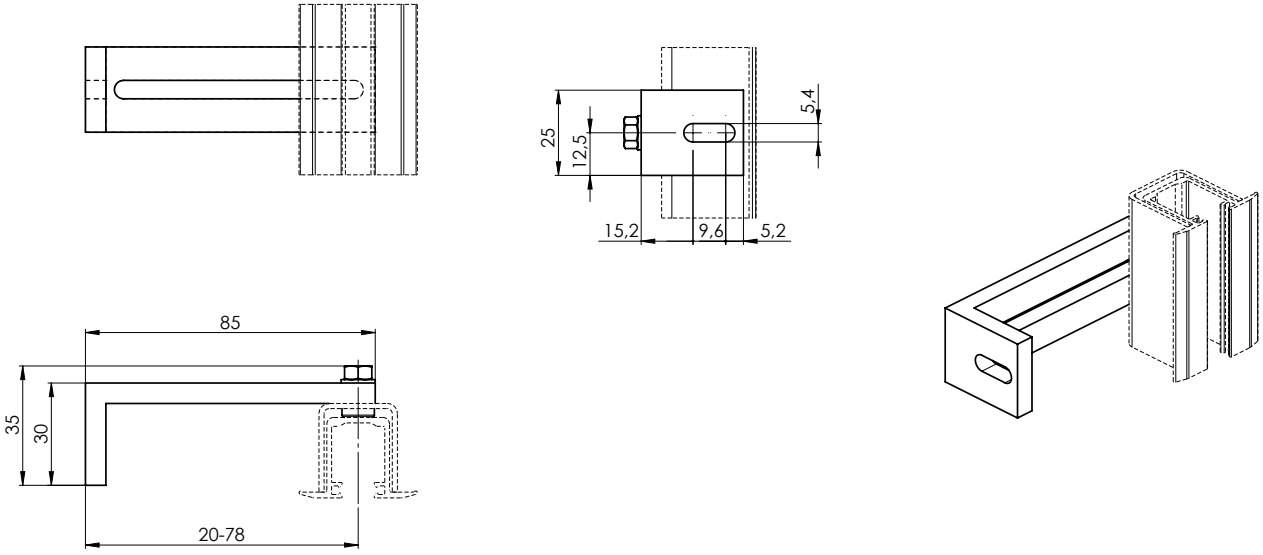

Guiding Channel Holder 55-125 P 047/2 2-01319-0000-2

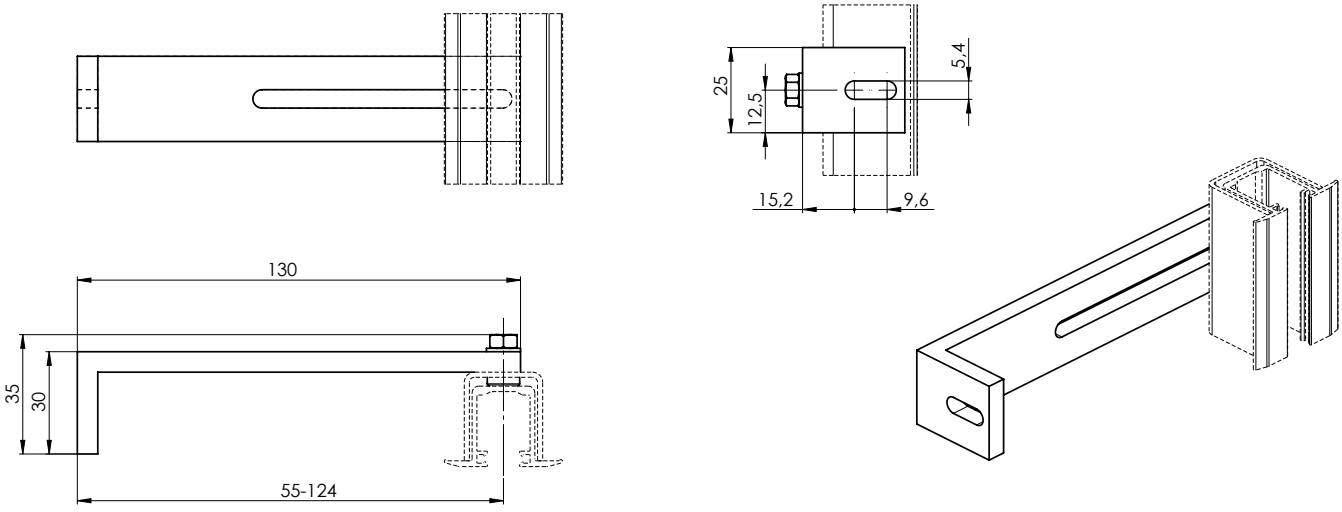

Guiding Channel Holder 104-174 P 047/3 2-01320-0000-2

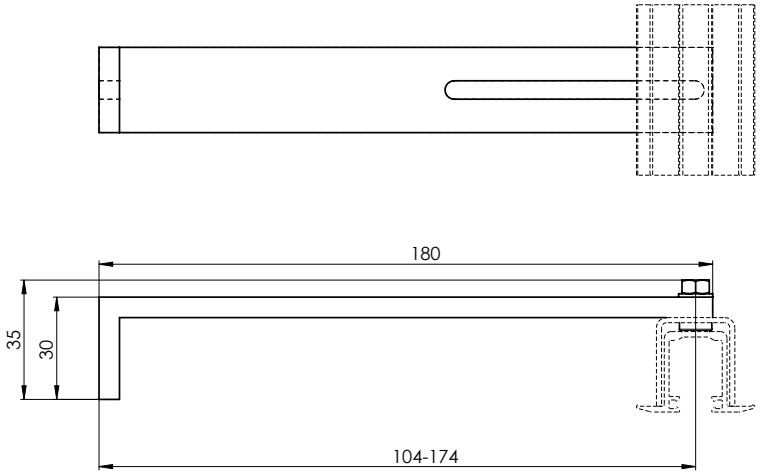

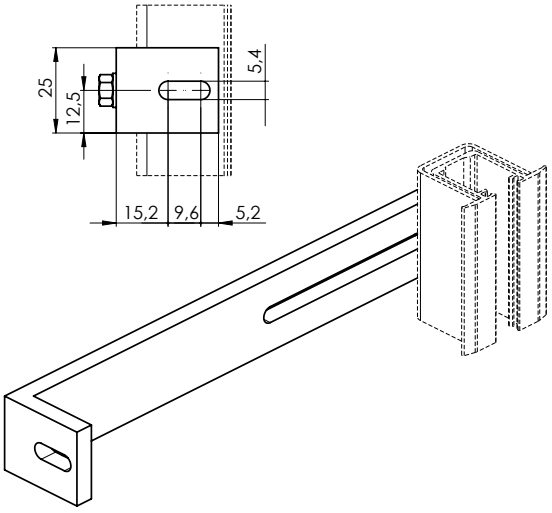

Types of guiding channel holders	Distance from center of guiding channel to the window frame (mm)	Guiding Channel
Guiding channel holder, 55 - 74 mm P021 (2-00050)	55 - 74	P 017/1, P 018/10
Guiding channel holder, 75 - 102 mm P021/1 (2-00051)	75 - 102	P 017/1, P 018/10
Guiding channel holder, 103 - 154 mm P021/2 (2-00052)	103 - 154	P 017/1, P 018/10
Telescopic guiding channel holder, 103 - 170 mm P021/3 (2-00401)	103 - 170	P 017/1, P 017/5, P 018/10, P 018/4
Telescopic guiding channel holder, 171 - 295 mm P021/4 (2-00402)	171 - 295	P 017/1, P 017/5, P 018/10, P 018/4
Telescopic guiding channel holder STS, 56 - 80 mm P021/5 (2-00582)	56 - 80	P 016/1, P 017/1, P 017/5, P 018/10, P 018/4
Telescopic guiding channel holder STS, 81 - 125 mm P021/6 (2-00583)	81 - 125	P 016/1, P 017/1, P 017/5, P 018/10, P 018/4
Guiding channel holder, 50 - 60 mm P050/1	50 - 60	P017/1, P018/10
Guiding channel holder, 60 - 70 mm P050/2	60 - 70	P017/1, P018/10
Guiding channel holder, 70 - 90 mm P050/3	70 - 90	P017/1, P018/10
Guiding channel holder, 90 - 110 mm P050/4	90 - 110	P017/1, P018/10
Guiding channel holder, 110 - 130 mm P050/5	110 - 130	P017/1, P018/10
Guiding channel holder, 130 - 150 mm P050/6	130 - 150	P017/1, P018/10
Guiding channel holder, 150 - 170 mm P050/7	150 - 170	P017/1, P018/10
Guiding channel holder, 170 - 190 mm P050/8	170 - 190	P017/1, P018/10
Guiding channel holder, 190 - 210 mm P050/9	190 - 210	P017/1, P018/10
Guiding channel holder, 210 - 230 mm P050/10	210 - 230	P017/1, P018/10

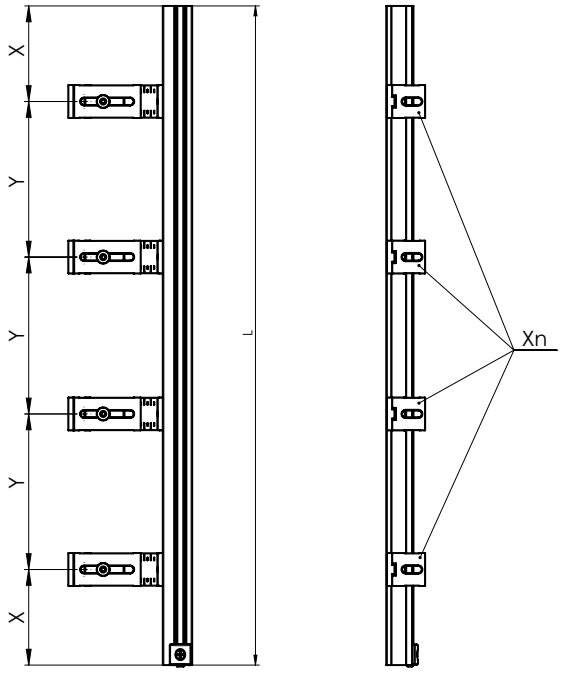

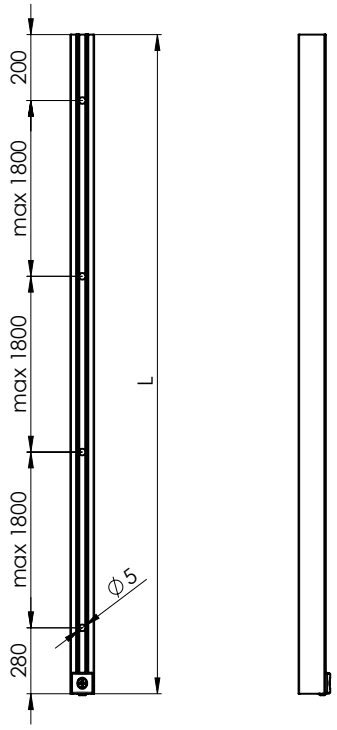

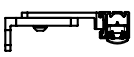



Xn	L (mm)
2	0 - 1799
3	1800 - 2799
4	2800 - 4000

IF THE DISTANCE IS BETWEEN TWO NEIGHBORS HOLES LARGER THAN 1800 ARE COMPLETED SYMMETRICALLY ANOTHER OPENING

Recommended quantity of holders per one guiding channel based on blind height

Blind height (mm)		Number of holders (pcs)
min.	max.	
0	1799	2
1800	2799	3
2800	3799	4
3800	4799	5
4800	6000	6

Holders for Exterior Blinds

Fixed hanger for C50
P 512 (2-00057)
(for head rail 40 x 40)

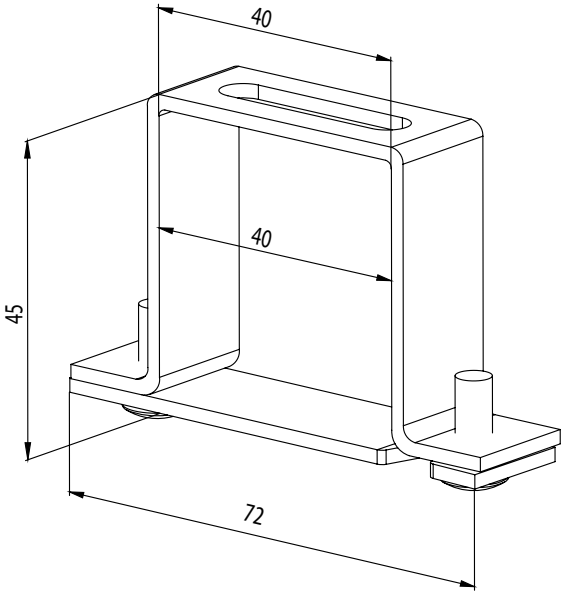

Fixed hanger for C50 with front cover
P 513 (6-001244)
(for head rail 40 x 40)

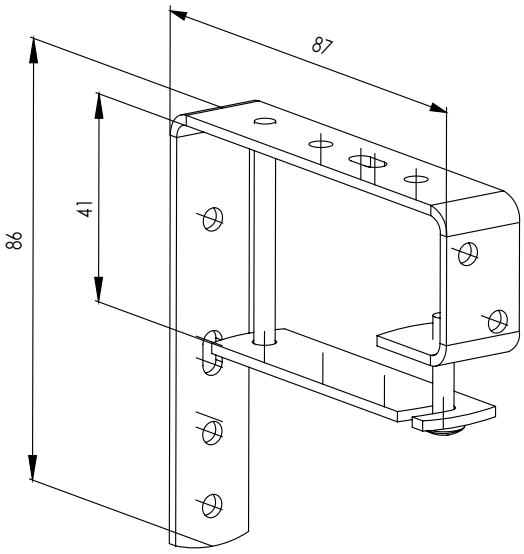

Universal openable hanger P512/6 (6-010980)
(for Head Rail 40x40)
Pad P 512/61 (3-02936)

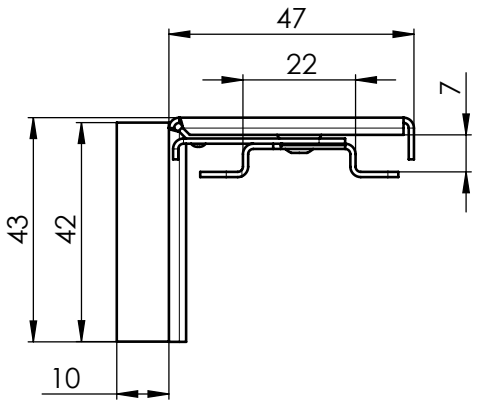

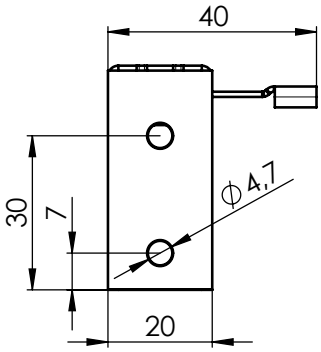

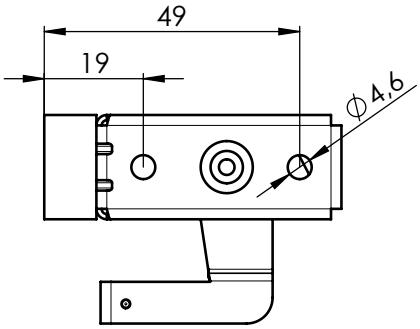

Head rail hanger Fe
P 002 (2-00038)
(for head rail 56 x 58)
This type of hanger is always delivered without spraying.

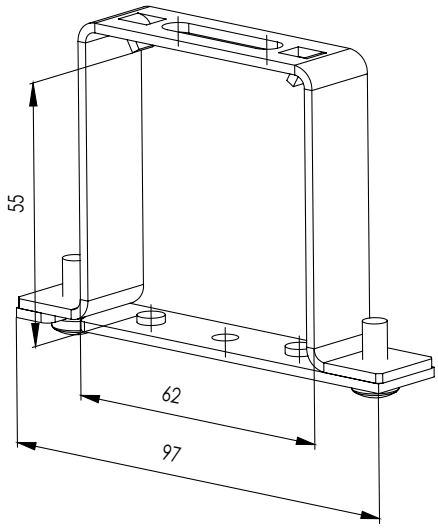

Head rail hanger, Fe, screw
P 002/10 (2-01351)

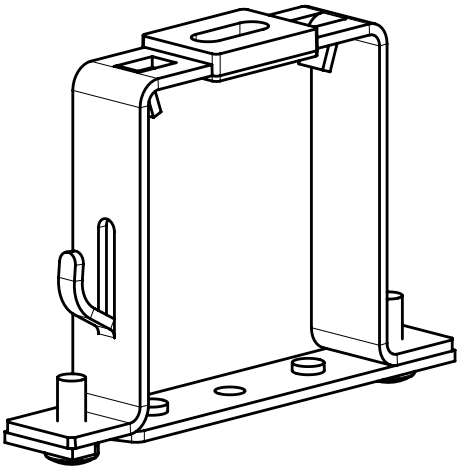

Head rail hanger Al
P 002/11 (2-01350)
(for head rail 58 x 60)

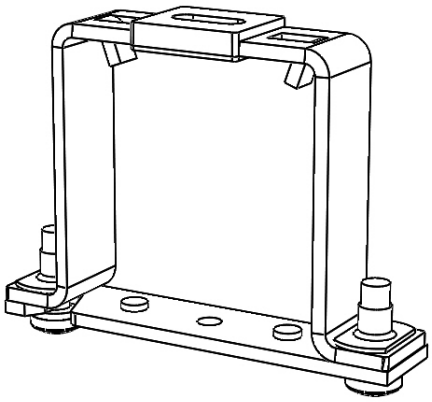

Head rail hanger Fe for Heluz P 002/31
(2-01688-0000)

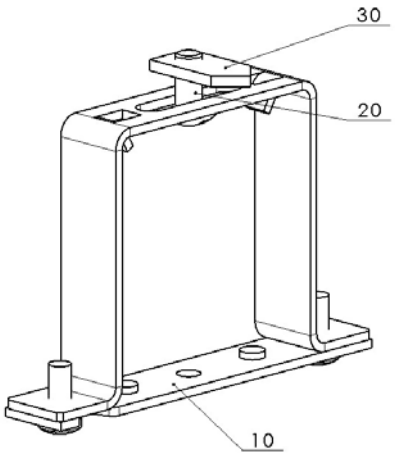

Head rail hanger mechanic - Fe Click
P 002/32 (7-201862-0000) 56 x 58

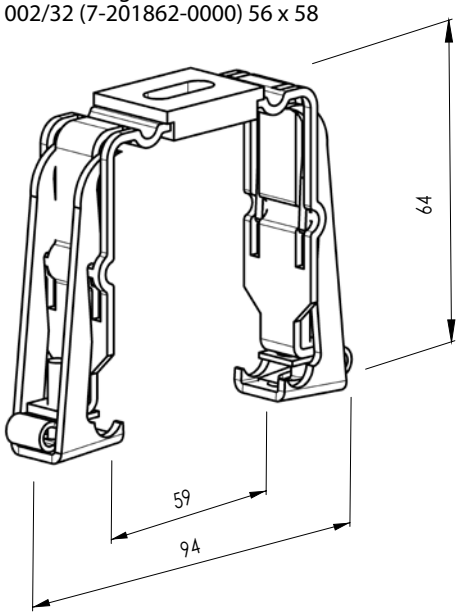

Fixed hanger (inner hanger Fe Click) 132 mm
P 009 (2-00403)
(for head rail 56 x 58)

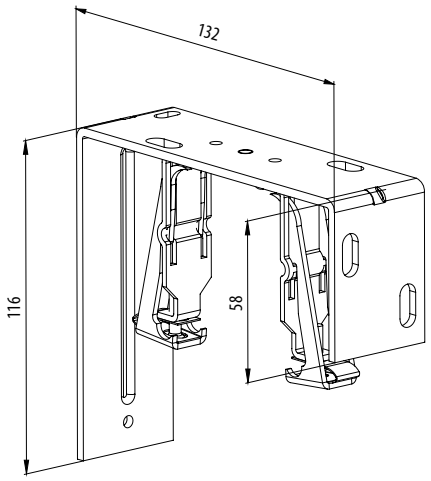

Adjustable hanger (inner hanger Fe Click) 106-163 mm
P 009/1 (2-00404)
(for head rail 56 x 58)

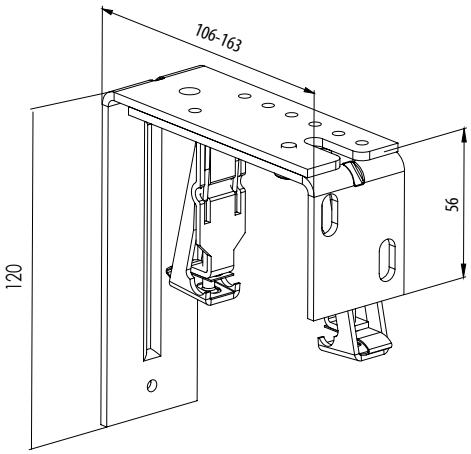

Adjustable hanger (inner hanger Fe Click) 165-223 mm
P 009/2 (2-00405)
(for head rail 56 x 58)

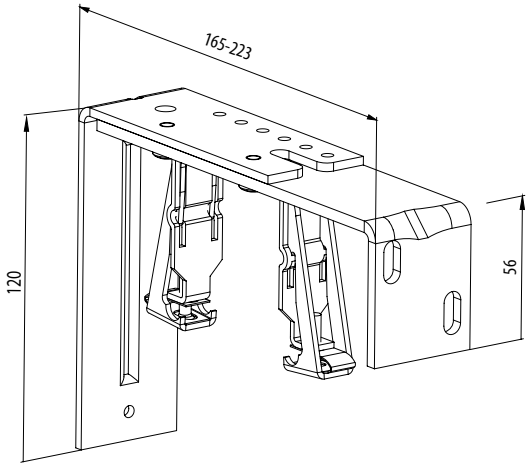

Blind bracket - fixed, mechanical 132,5 mm
P 009/20 (2-01393)
(for head rail 56 x 58)

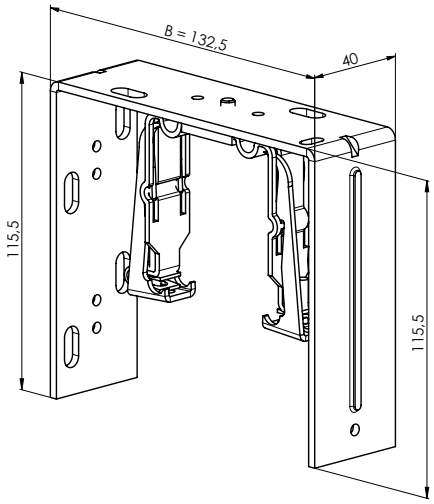

Blind bracket - short, adjustable and mechanical106-163 mm
P 009/21 (2-01392)
(for head rail 56 x 58)(for head rail 56 x 58)

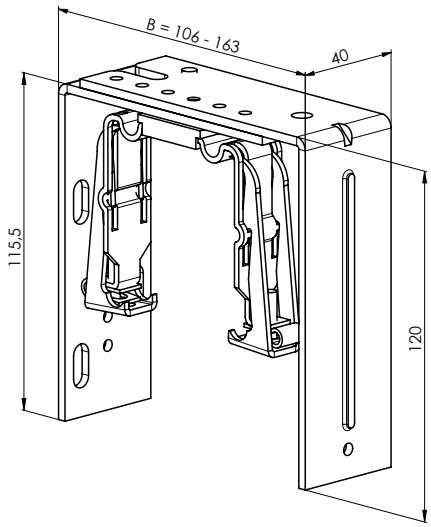

Blind bracket - long, adjustable and mechanical 165 – 223 mm
P 009/22 (2-01391)

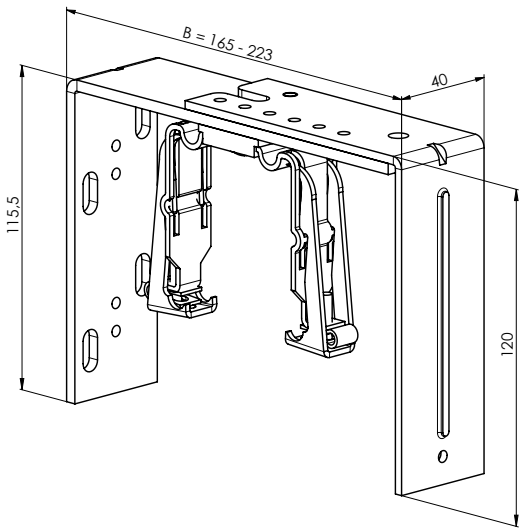

Fixed hanger (inner hanger Fe) 132,5 mm
P 010 (2-00353)
(for head rail 56 x 58)

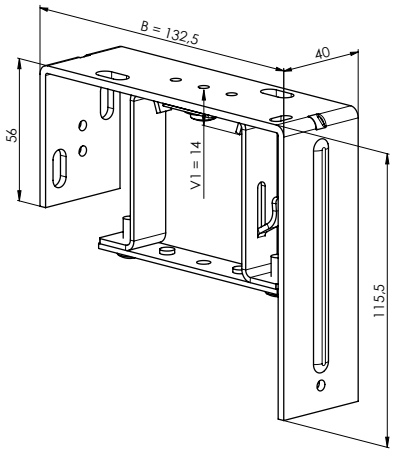

Adjustable hanger (inner hanger Fe) 106-163 mm
P 010/1 (2-00354)
(for head rail 56 x 58)

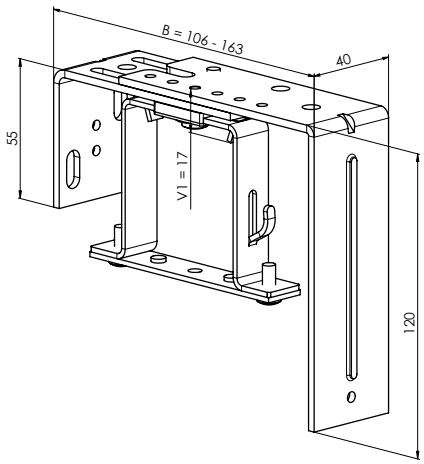

Adjustable hanger (inner hanger Fe) 165-223 mm
P 010/2 (2-00355)
(for head rail 56 x 58)

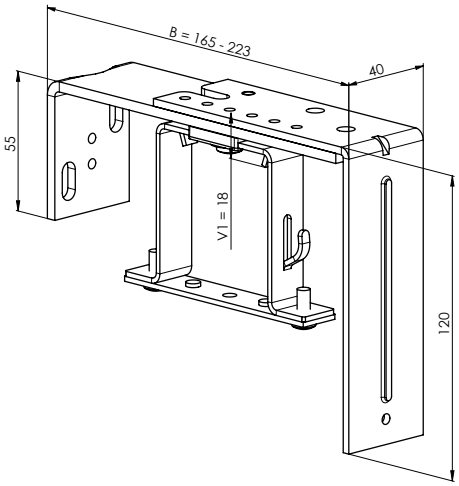

Blind bracket - fixed 132,5 mm
P 010/20 (2-01387)
(for head rail 56 x 58)

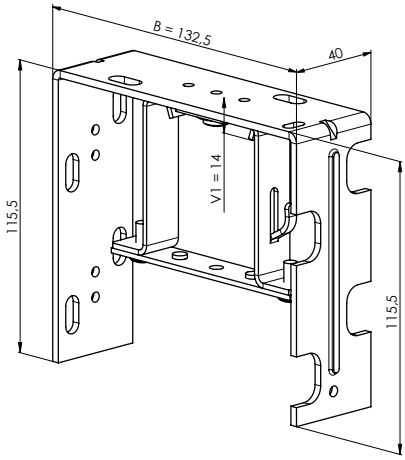

Blind bracket - short, adjustable 106-163 mm
P010/21 (2-01386)
(for head rail 56 x 58)

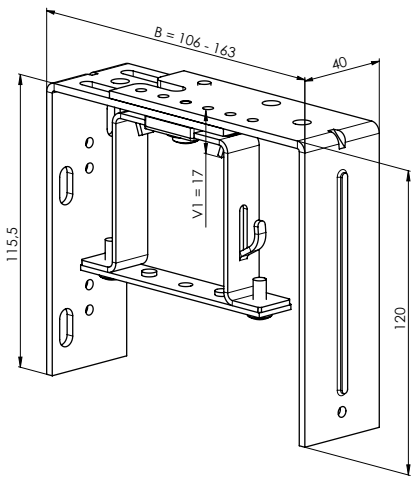

Blind bracket - long, adjustable 165 – 223 mm
P 010/22 (2-01385)
(for head rail 56 x 58)

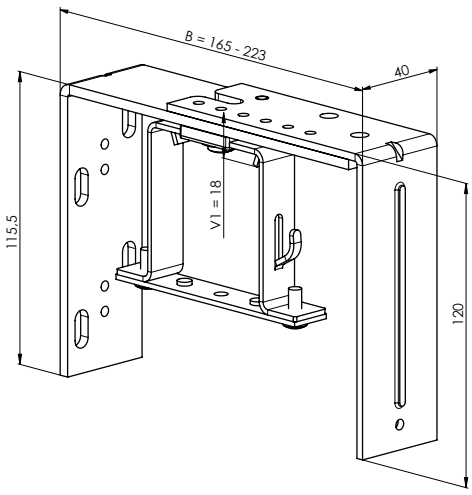

Adjustable hanger - mechanical 107 - 167 mm
P 010/30 (2-01599-0000)

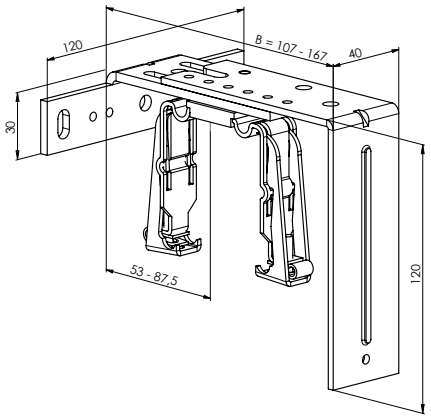

Adjustable hanger - mechanical 162 - 222 mm
P 010/31 (2-01600-0000)

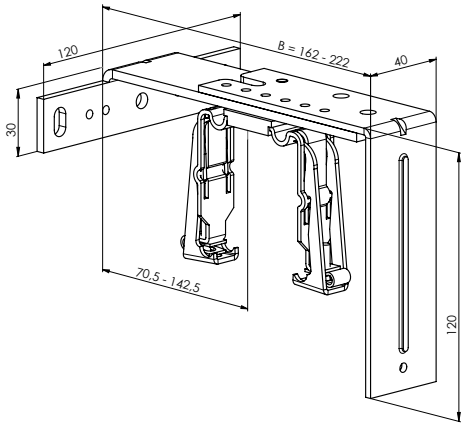

Adjustable hanger - mechanical 217 - 277 mm
P 010/32 (2-01601-0000)

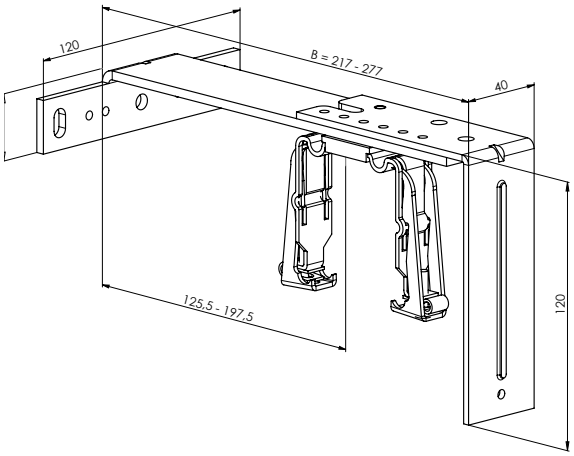

Adjustable hanger - fixed 107 - 167 mm
P 010/33 (2-01602-0000)

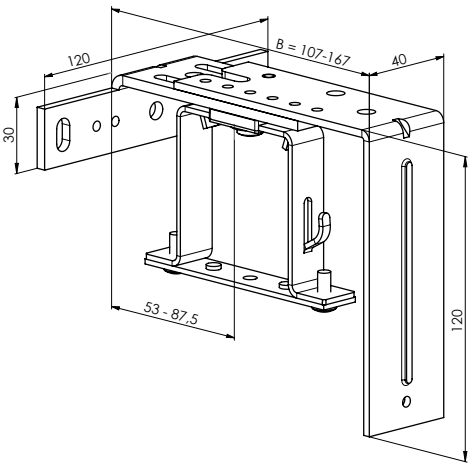

Adjustable hanger - fixed 162 - 222 mm
P 010/34 (2-01603-0000)

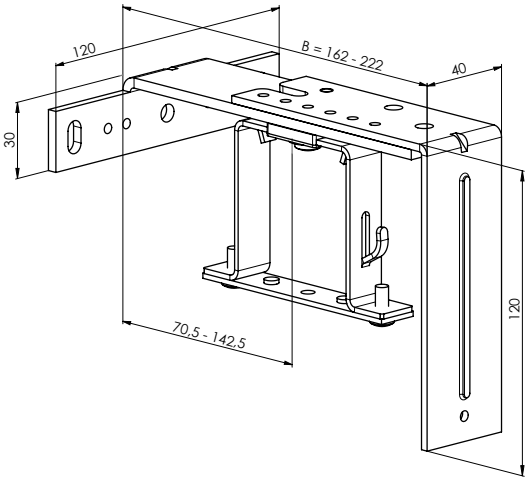

Adjustable hanger - fixed 217 - 277 mm
P 010/35 (2-01604-0000)

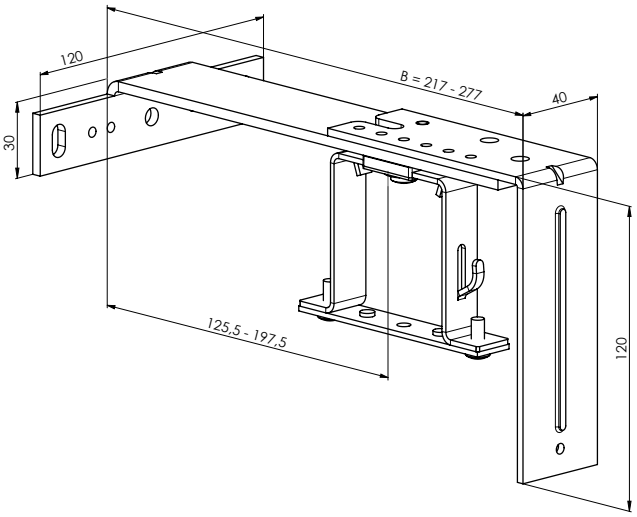

Adjustable bracket - mechanical 206 – 268 mm
P 010/36 (2-01794-0000)

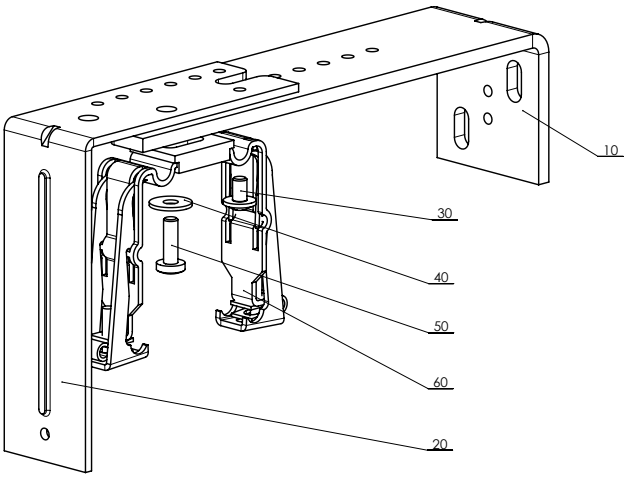

Adjustable bracket - mechanical 256 – 318 mm
P 010/37 (2-01795-0000)

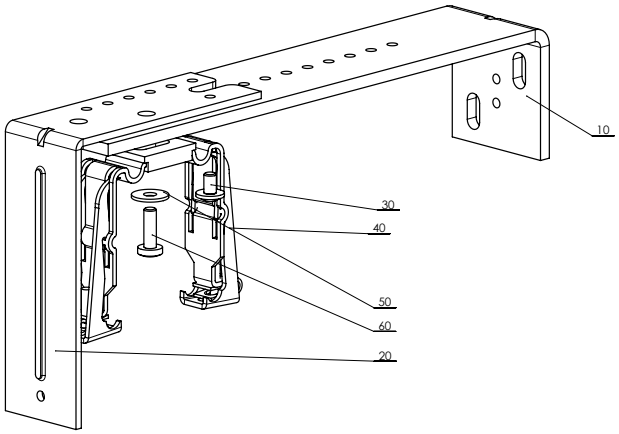

Adjustable bracket - mechanical 306 – 368 mm
P 010/38 (2-01796-0000)

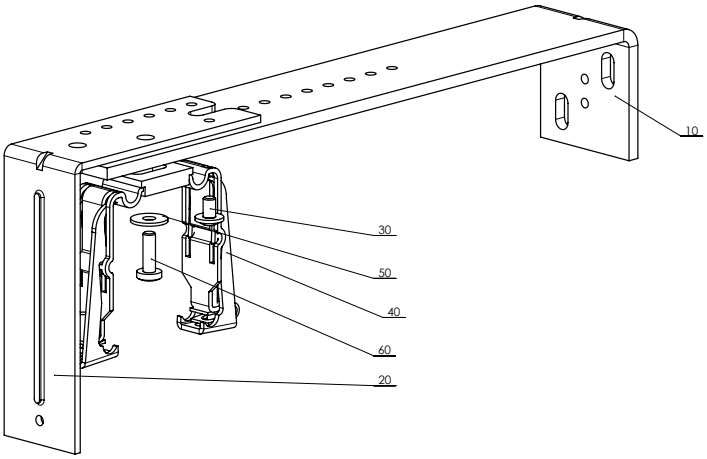

Adjustable double bracket - mechanical 206 – 268 mm
P 010/39 (2-01797-0000)

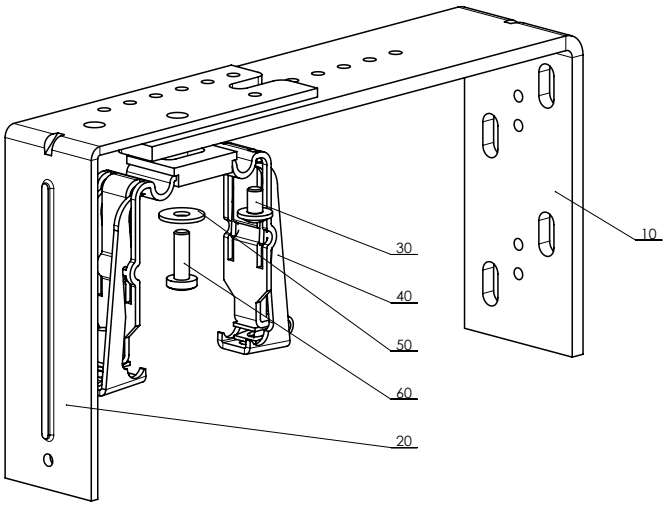

Adjustable double bracket - mechanical 256 – 318 mm
P 010/40 (2-01798-0000)

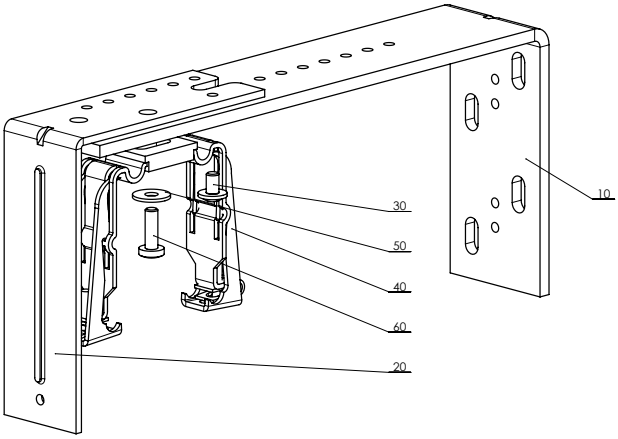

Adjustable double bracket - mechanical 306 – 368 mm
P 010/41 (2-01799-0000)

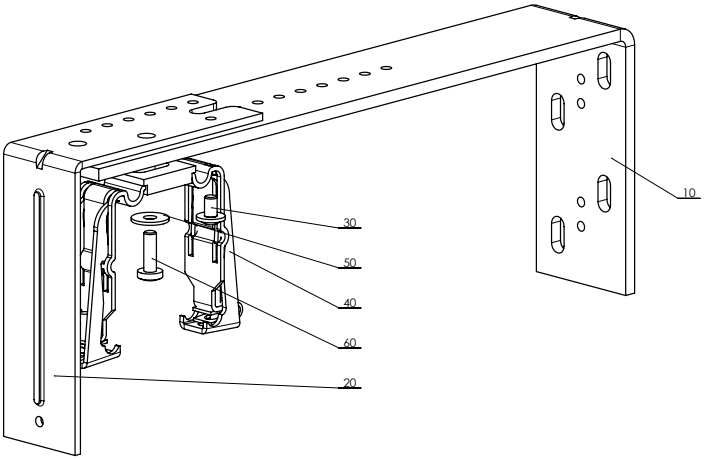

Adjustable bracket – fixed 206 – 268 mm
P 010/42 (2-01800-0000)

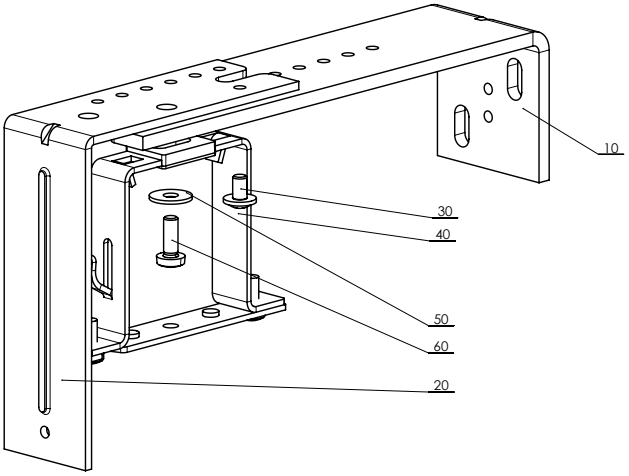

Adjustable bracket – fixed 256 – 318 mm
P 010/43 (2-01801-0000)

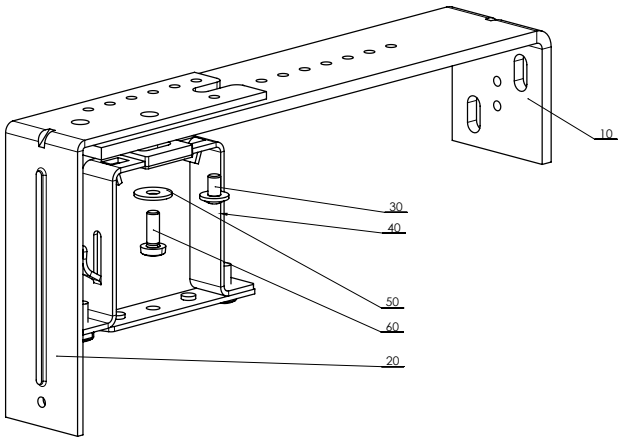

Adjustable bracket – fixed 306 – 368 mm
P 010/44 (2-01802-0000)

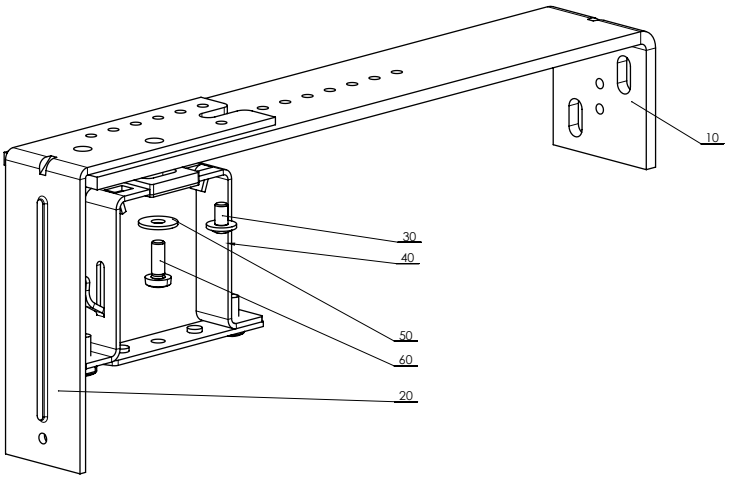

Adjustable double bracket – fixed 206 – 268 mm
P 010/45 (2-01803-0000)

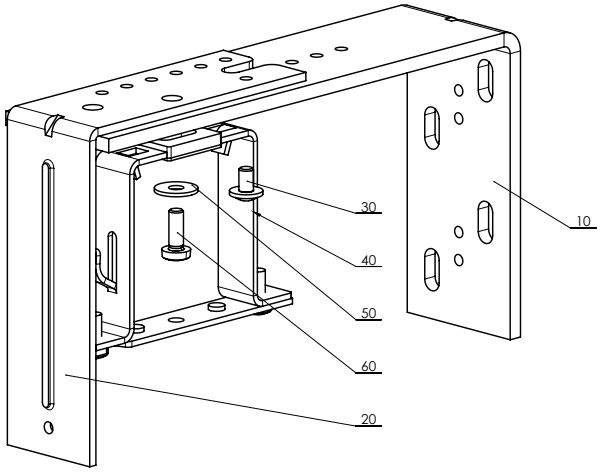

Adjustable double bracket – fixed 256 – 318 mm
P 010/46 (2-01804-0000

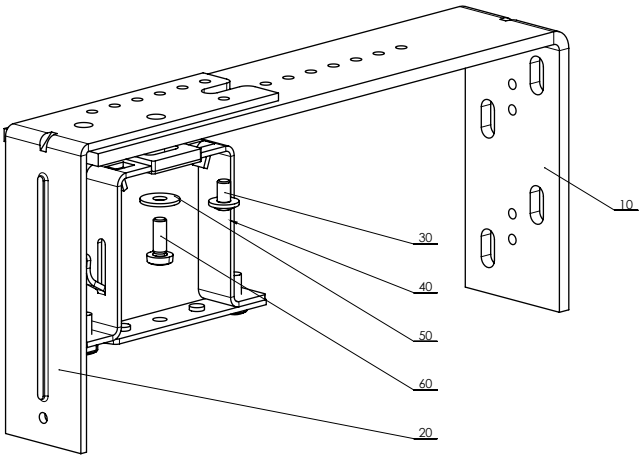

Adjustable double bracket – fixed 306 – 368 mm
P 010/47 (2-01805-0000)

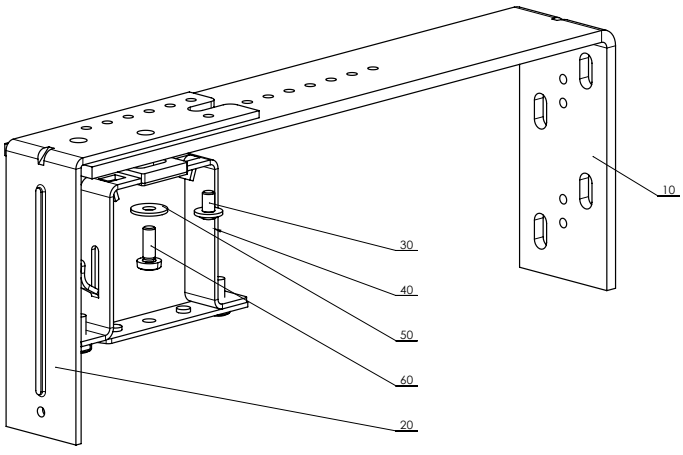

Fixed hanger (inner hanger Al) 132 mm
P 011 (2-00384)
(for head rail 58 x 60)

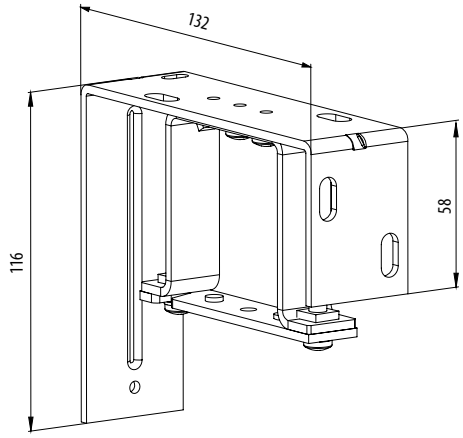

Adjustable hanger (inner hanger Al) 106-163 mm
P 011/1 (2-00373)
(for head rail 58 x 60)

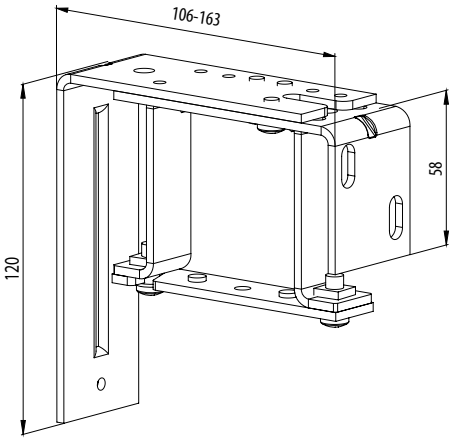

Adjustable hanger (inner hanger Al) 165-223 mm
P 011/2 (2-00374)
(for head rail 58 x 60)

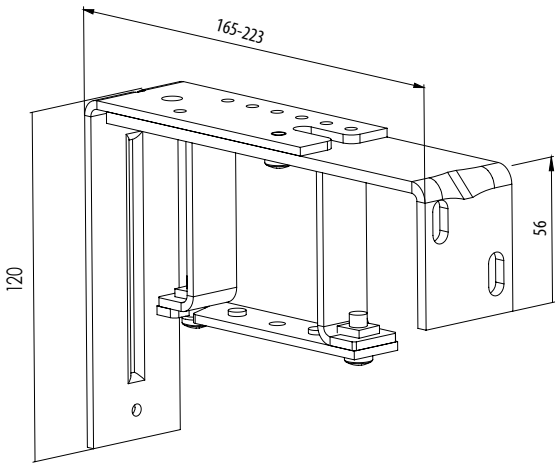

Blind bracket - fixed, with Al bracket 132,5 mm
P 011/20 (2-01390)
(for head rail 58 x 60)

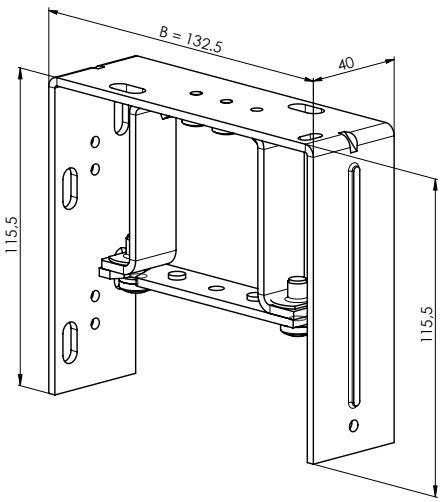

Blind bracket - short, adjustable with Al bracket 106-163 mm
P011/21 (2-01389)
(for head rail 58 x 60)

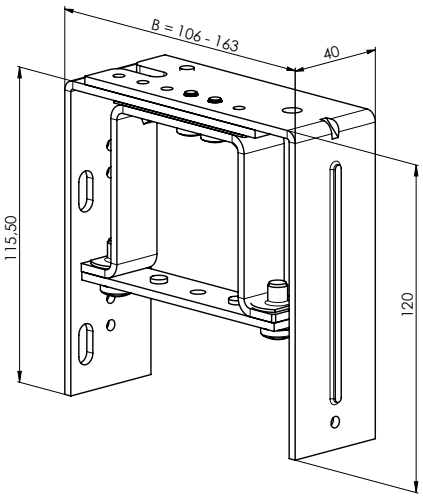

Blind bracket - long, adjustable with Al bracket 165 – 223 mm
P 011/22 (2-01388)
(for head rail 58 x 60)

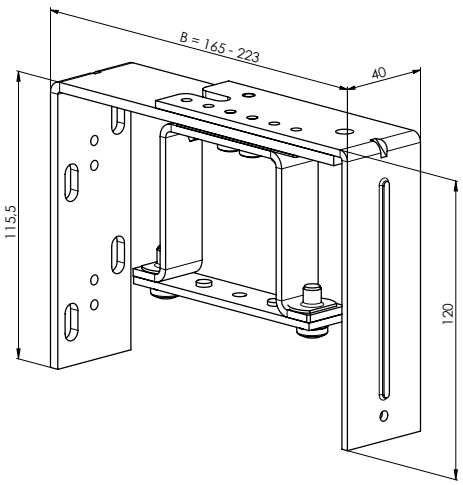

Variable holders

The variable holders are only galvanized as standard, spraying is possible at an additional cost.

Variable holder P 130/1
2-01416-0000-0

DIMENSION TABLE		
DIMENSION	**Min.**	**Max.**
A	150	400
B	110	400
D	110	360

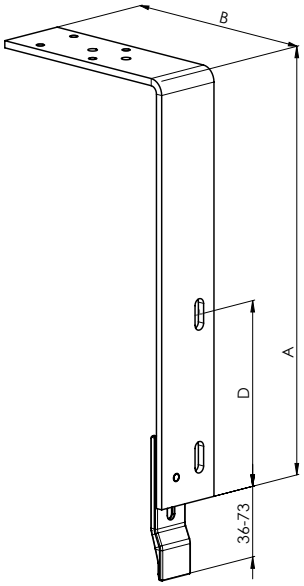

Variable holder P 130/2
2-01417-0000-0

DIMENSION TABLE		
DIMENSION	**Min.**	**Max.**
A	170	400
B	230	400
D	110	340

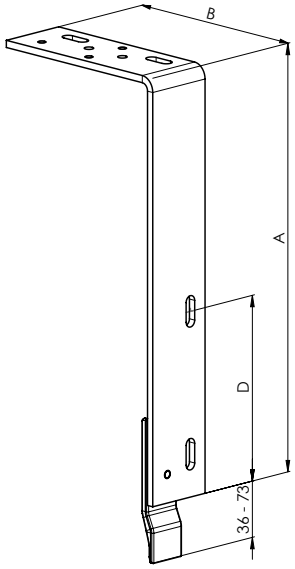

Variable holder P 130/3
2-01418-0000-0

DIMENSION TABLE		
DIMENSION	**Min.**	**Max.**
A	160	330
B	100	150
C	130	230
D	110	280

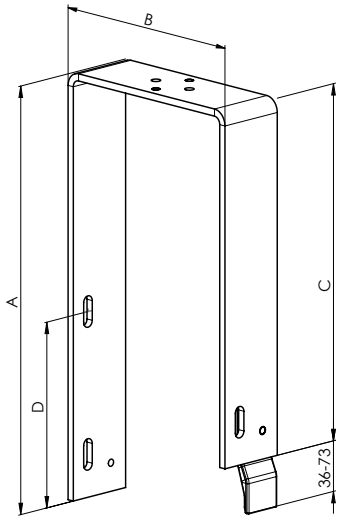

Variable holder P 130/4
2-01419-0000-0

DIMENSION TABLE		
DIMENSION	**Min.**	**Max.**
A	160	330
B	100	150
C	130	230
D	110	280

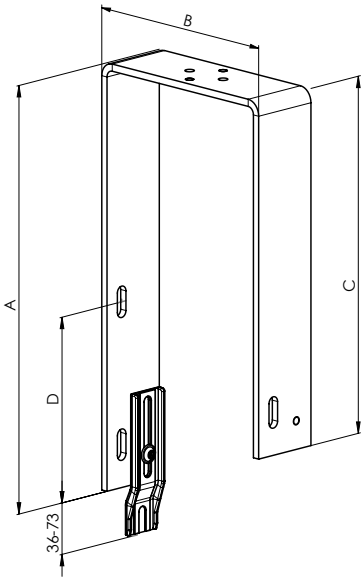

Variable holder P 130/5
2-01420-0000-0

DIMENSION TABLE		
DIMENSION	**Min.**	**Max.**
A	160	330
B	100	150
C	130	230
D	110	280

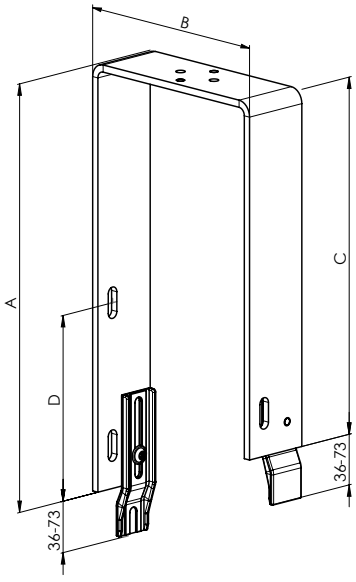

Variable holder P 130/6
2-01421-0000-0

DIMENSION TABLE		
DIMENSION	**Min.**	**Max.**
A	160	330
B	110	150
C	130	230
D	110	280

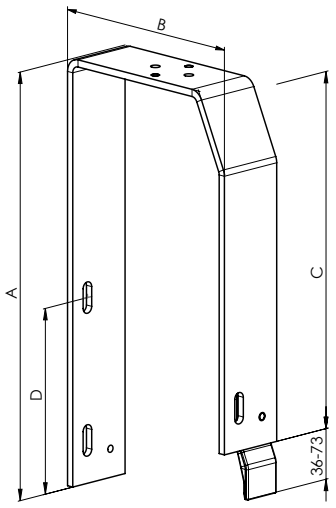

Variable holder P 130/7
2-01422-0000-0

DIMENSION TABLE		
DIMENSION	**Min.**	**Max.**
A	160	330
B	110	150
C	130	230
D	110	260

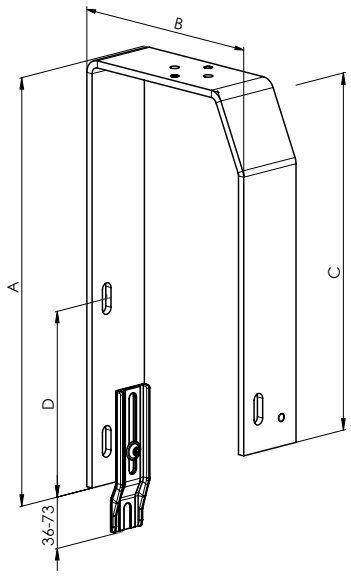

Variable holder P 130/8
2-01423-0000-0

DIMENSION TABLE		
DIMENSION	**Min.**	**Max.**
A	160	330
B	110	150
C	130	230
D	110	280

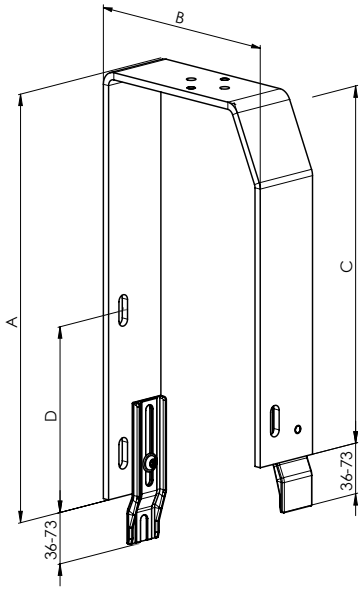

Variable holder P 130/9
2-01424-0000-0

DIMENSION TABLE		
DIMENSION	**Min.**	**Max.**
A	180	330
B	110	150
C	130	230
D	110	260

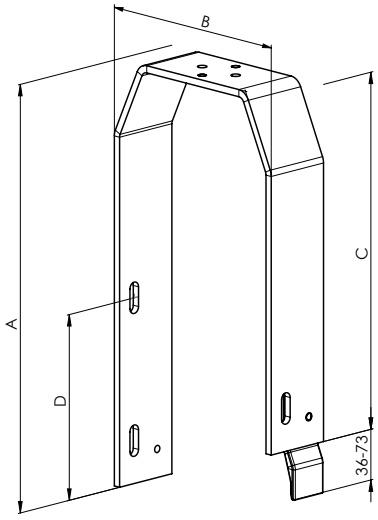

Variable holder P 130/10
2-01425-0000-0

DIMENSION TABLE		
DIMENSION	**Min.**	**Max.**
A	180	330
B	110	150
C	130	230
D	110	260

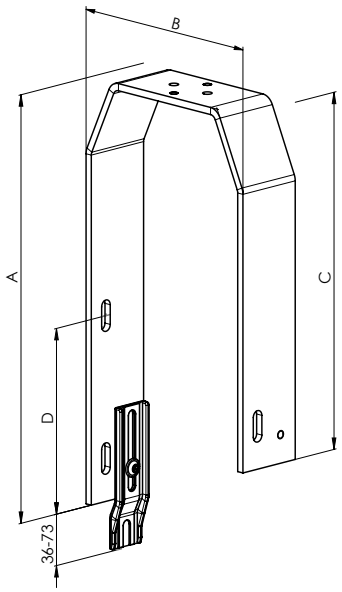

Variable holder P 130/11
2-01426-0000-0

DIMENSION TABLE		
DIMENSION	**Min.**	**Max.**
A	180	330
B	110	150
C	130	230
D	110	260

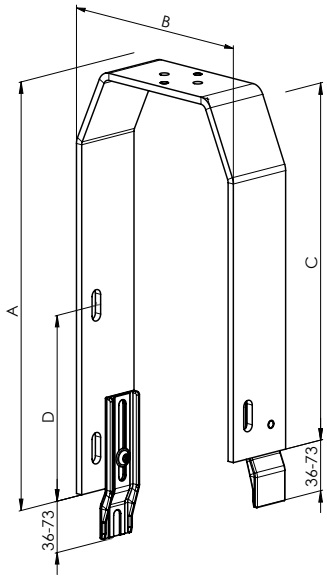

Holders KBT1-12

Blind bracket - mechanical KBT01 (110-180)
P 008_KBT1/1 (6-010604-0000) - KBT01 (110-140)
P 008_KBT1/2 (6-010604-0001) - KBT01 (141-180)
(for head rail 40 x 40)

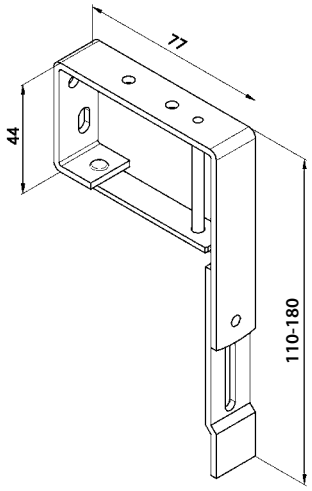

Blind bracket - mechanical KBT02 (130-255)
P 008_KBT2/1 (6-010604-0190) - KBT02 (130-160)
P 008_KBT2/2 (6-010604-0002) - KBT02 (161-200)
P 008_KBT2/3 (6-010604-0012) - KBT02 (201-255)
(for head rail 56 x 58)

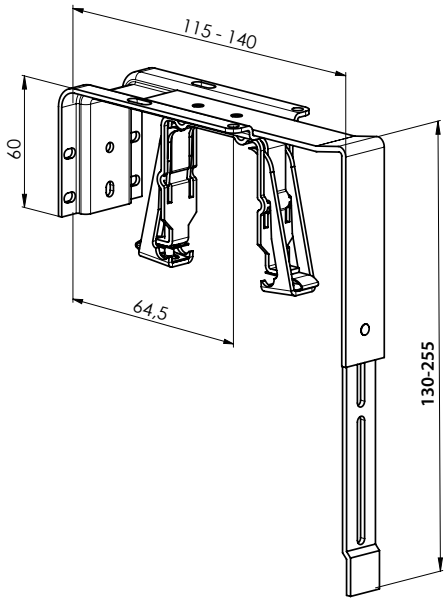

KBT3/1 (B=116-169; A=147-524)
KBT3/2 (B=170-227; A=147-524)
(for head rail 56 x 58)

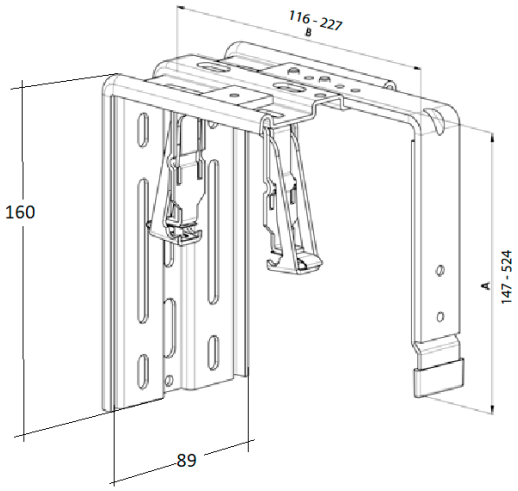

KBT4/1 (B=116-169; A=147-524)
KBT4/2 (B=170-227; A=147-524)
(for head rail 56 x 58)

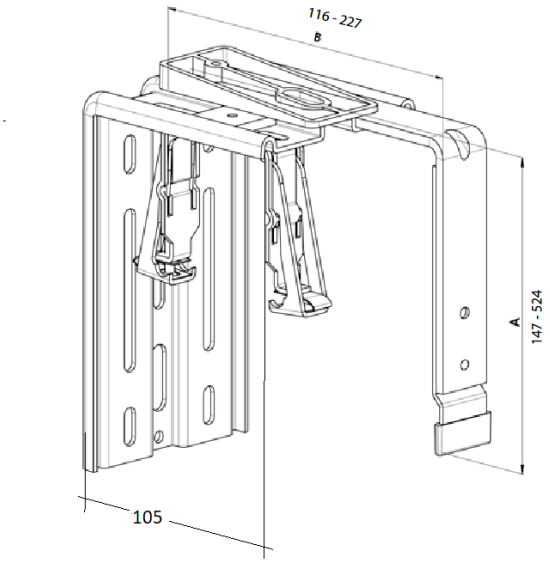

KBT5/1 (B=135-190;A=177-524)
KBT5/2 (B=191-524;A=177-524)
(for head rail 56 x 58)

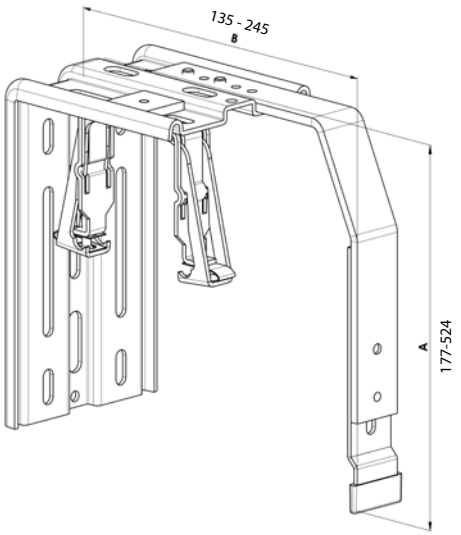

KBT7/11 (B=116-169; A=147-524; A1=28-83)
KBT7/12 (B=116-169; A=147-524; A1=84-138)
KBT7/13 (B=116-169; A=147-524; A1=139-193)
KBT7/21 (B=170-227; A=147-524; A1=28-83)
KBT7/22 (B=170-227; A=147-524; A1=84-138)
KBT7/23 (B=170-227; A=147-524; A1=139-193)
(for head rail 56 x 58)

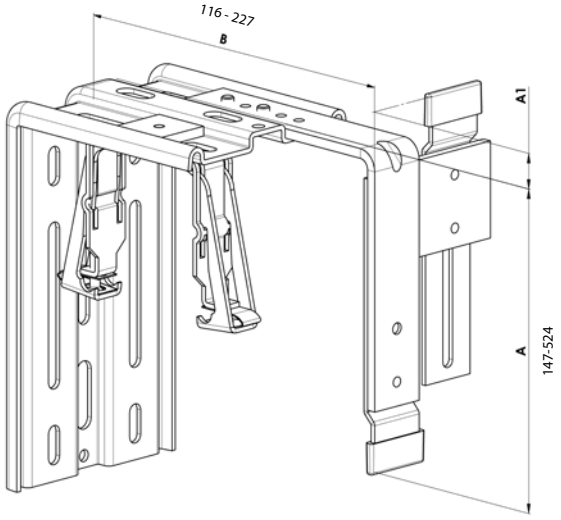

KBT8/1 (B=116-169; A=147-524)
KBT8/2 (B=170-227; A=147-524)
(for head rail 56 x 58)

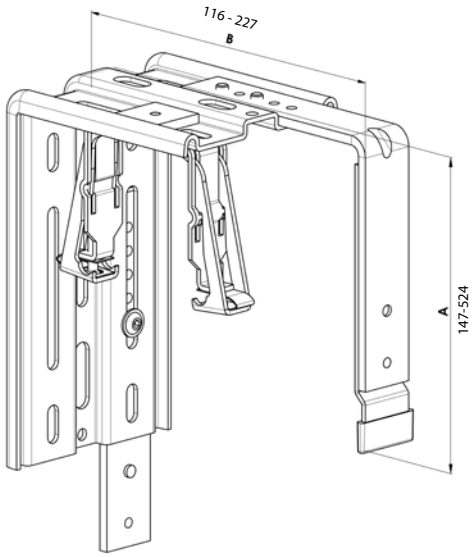

KBT4/1 (B=116-169; A=147-524)
KBT4/2 (B=170-227; A=147-524)
(for head rail 56 x 58)

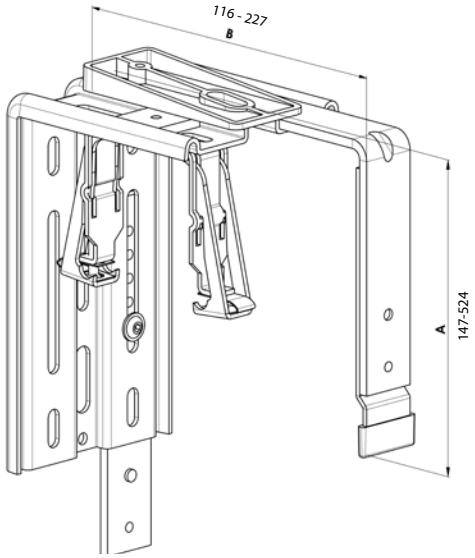

KBT3/1 (B=116-169; A=147-524)
KBT3/2 (B=170-227; A=147-524)
(for head rail 56 x 58)

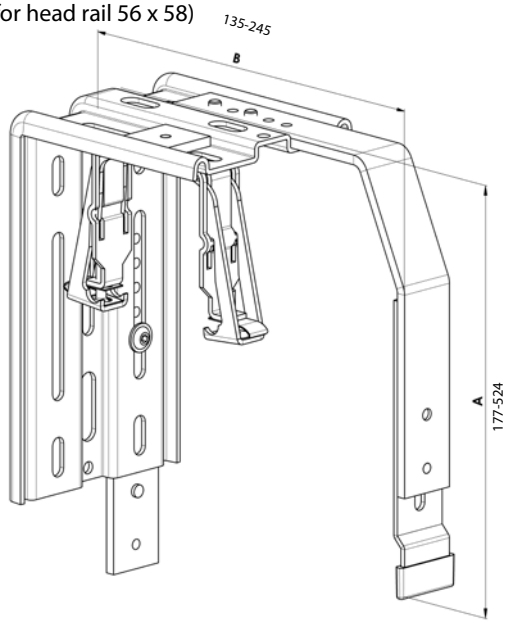

Holders for Applications under Plastering (for atypical designs of front covers)

KBT6/1 (B=116-169; A=precise)
KBT6/2 (B=170-227; A=precise)
(for head rail 56 x 58)

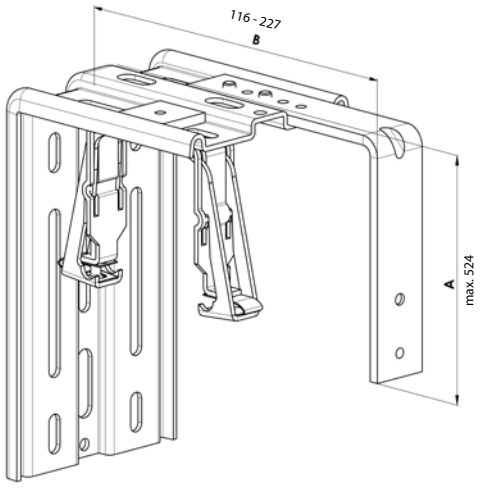

KBT11/1 (B=116-169; A=precise)
KBT11/2 (B=170-227; A=precise)
(for head rail 56 x 58)

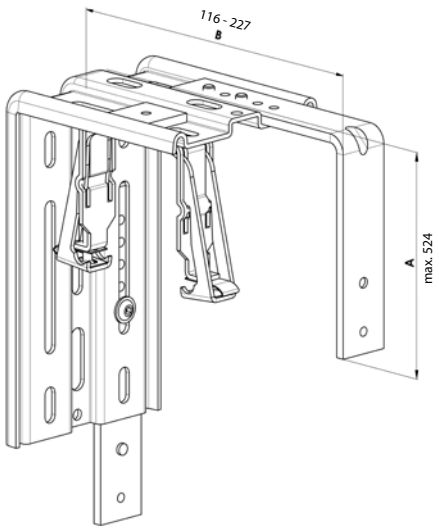

KBT 12/11 (B=116-227; A=147-524)

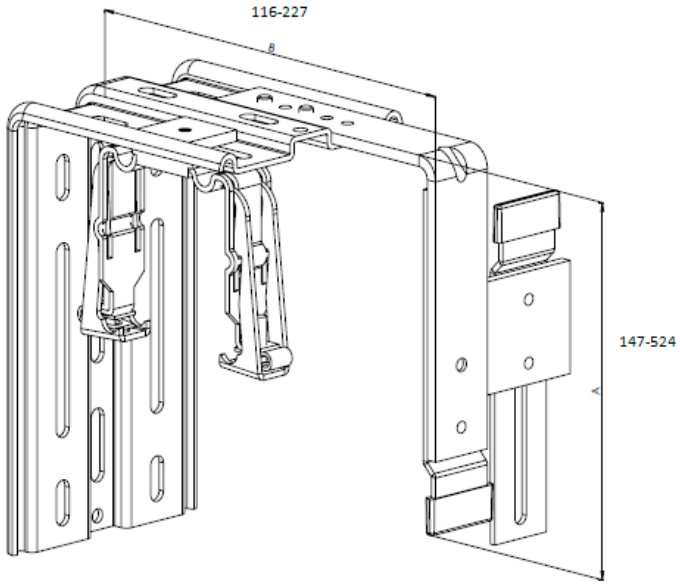

Hanger of head rail double - adjustable P 003/22 (2-01347-XXXX)

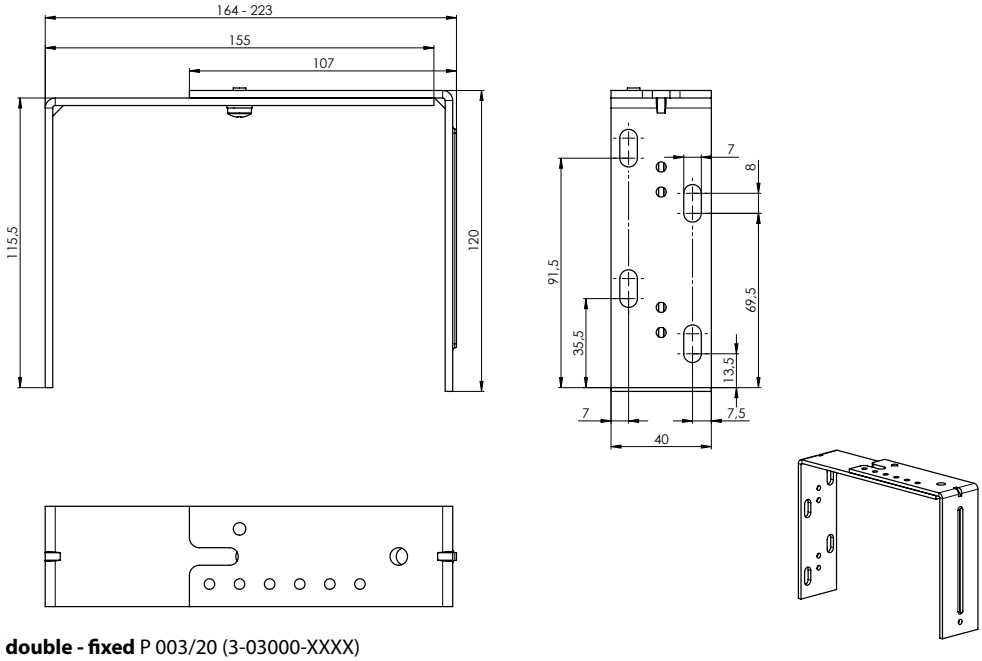

Hanger of head rail double - fixed P 003/20 (3-03000-XXXX)

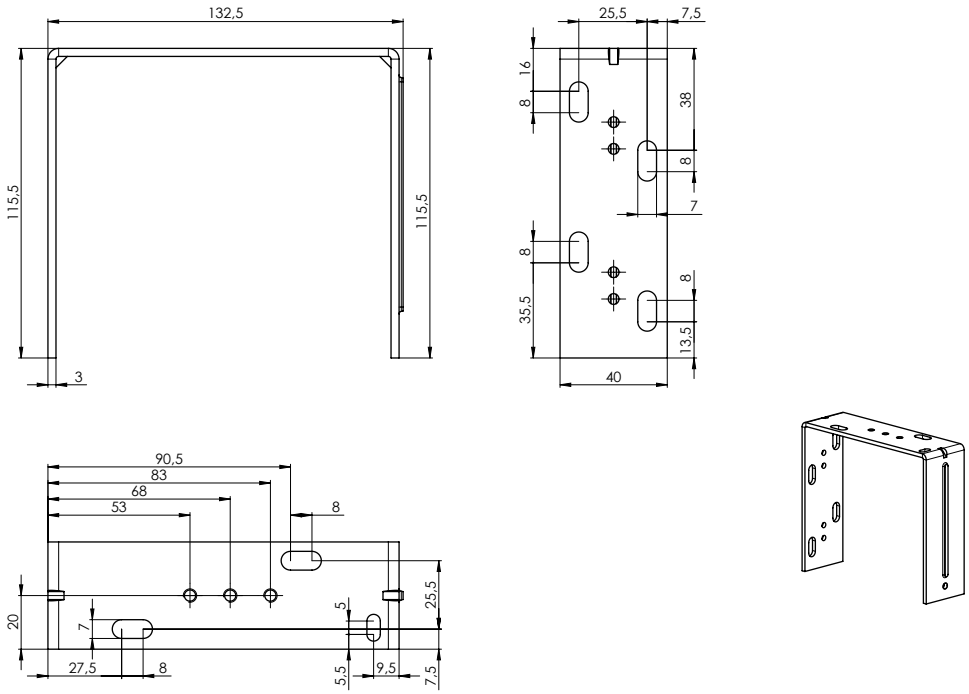

Hanger of head rail double - short P 003/21 (2-01346-XXXX)

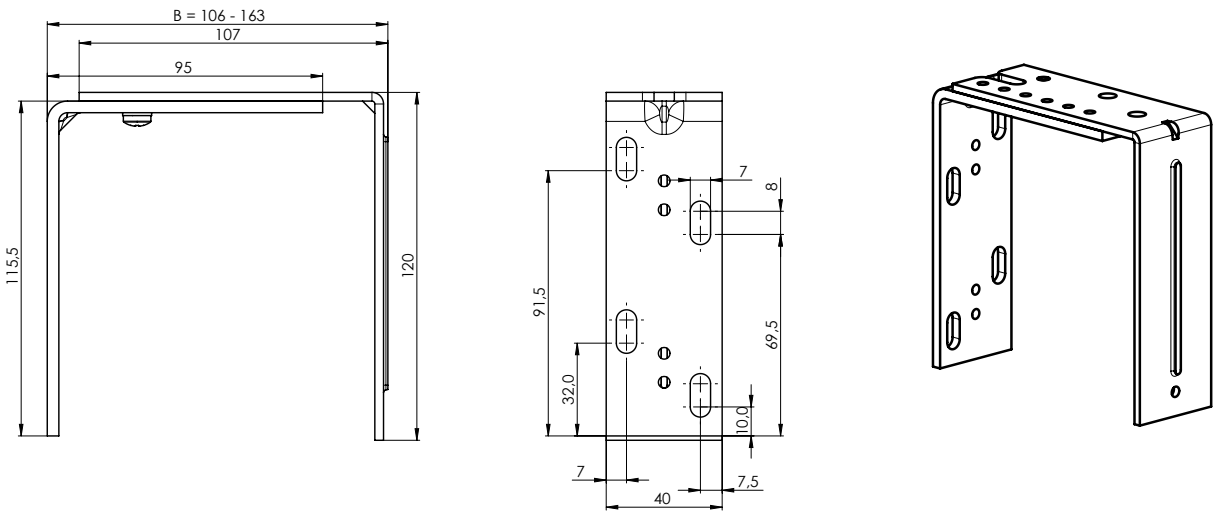

Deduction of brackets

Bracket type	Distance V1 [mm]
P512	2
P513	2
P512/6	7
P002	7,5
P002/10	11
P002/11	12
P002/31	17,5
P002/32	11
P009	13
P009/1	16
P009/2	17
P009/20	13
P009/21	16
P009/22	17
P010	14
P010/1	17
P010/2	18
P010/20	14
P010/21	17
P010/22	18
P010/30	17
P010/31	17
P010/32	17
P010/33	18
P010/34	18
P010/35	18
P010/36	18
P010/37	18
P010/38	18
P010/39	19
P010/40	19
P010/41	19

Bracket type	Distance V1 [mm]
P010/42	18
P010/43	18
P010/44	18
P010/45	19
P010/46	19
P010/47	19
P011	15
P011/1	18
P011/2	19
P011/20	15
P011/21	18
P011/22	19
Variable brackets+P512	7
Variable brackets+P513	7
Variable brackets+P512/6	12
Variable brackets+P002	12,5
Variable brackets+P002/10	16
Variable brackets+P002/11	17
Variable brackets+P002/31	22,5
Variable brackets+P002/32	16
KBT01	2,5
KBT02	11,5
KBT3	18
KBT4	28
KBT5	18
KBT6	18
KBT7	18
KBT8	18
KBT9	28
KBT10	18
KBT11	18
STS FIX	18

Use of holders for respective front cover types

KBT Holders	Front cover					
KBT1	T2	T3	T2u	T3u		
KBT2	T2	T3	T2u	T3u		
KBT3	T1	T1u	T2	T3	T2u	T3u
KBT4	T2s	T3s				
KBT5	T2b	T2r	T3b	T3r		
KBT6	atypical cover					
KBT7	T1c					
KBT8	T4	T4c	T4r	T4u; T4u/x	T4d; T4d/x	
KBT9	T4s					
KBT10	T4b					
KBT11	atypical cover					

Types of Front Covers

Front Covers type T1

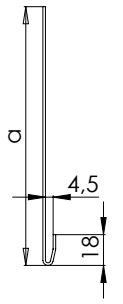

T1

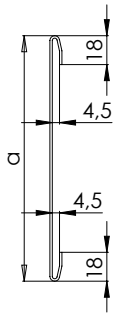

T1c

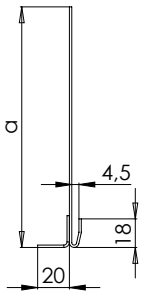

T1u

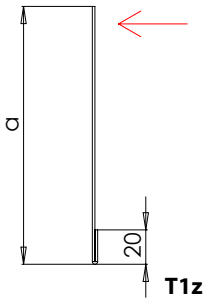

T1z

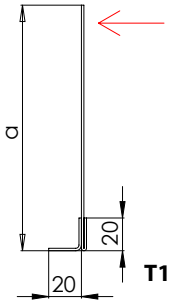

T1uz

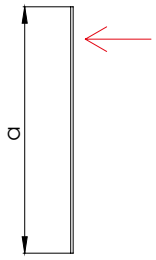

T1n

Note: Dimensional tolerances for input values a, b, c, d = +/- 2 mm
We recommend a minimum front cover width of 140 mm for exterior blinds Cetta 80 zig-zag, Zetta 90, Setta 90 and Cetta 100 Flexi with underplaster installation.
Minimum value of dimension B = 12 mm
Note: The arrows in some front cover indicate where the holes for hanging the cover sheet during painting are created.
Holes for hanging during painting are drilled 50 cm apart for T1n, T2n and T3n cover plates due to possible bending within the entire painting process.
*For T4n, T4d/1, T4d/2 cover plates, the drilling is identical - if dimensions a - c are smaller than 100 mm.

Front Covers type T2

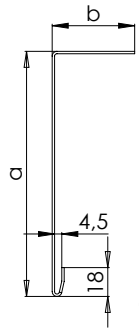

T2

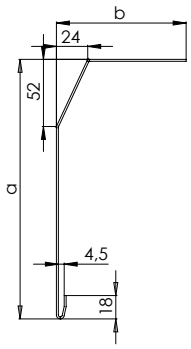

T2b

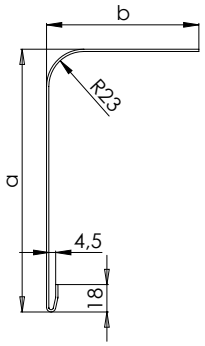

T2r

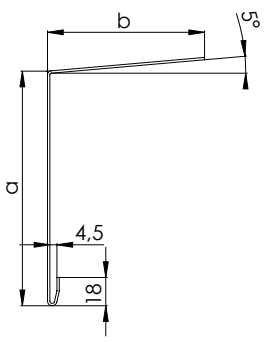

T2s

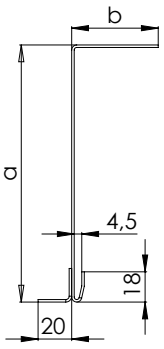

T2u

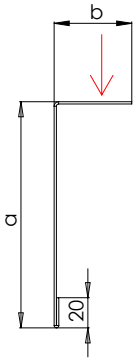

T2z

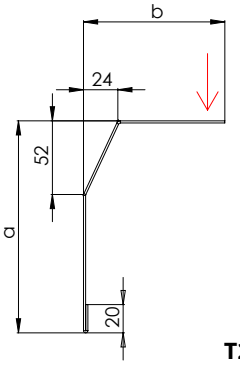

T2bz

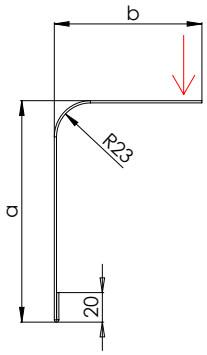

T2rz

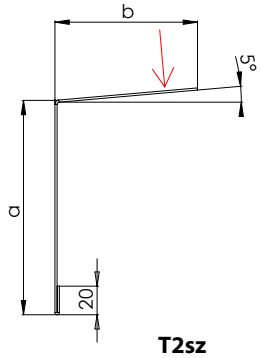

T2sz

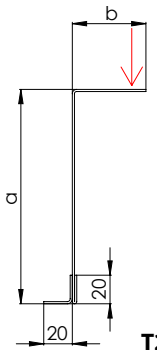

T2uz

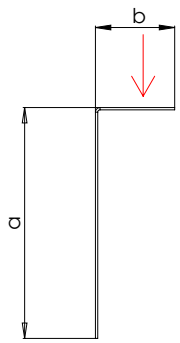

T2n

Front Covers type T3

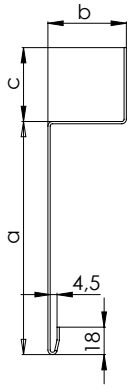

T3

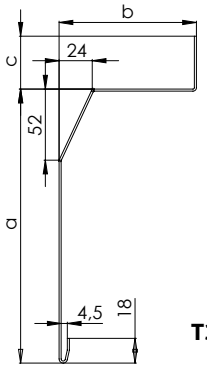

T3b

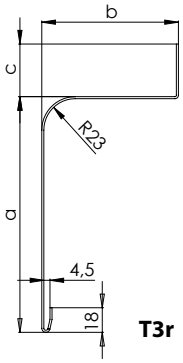

T3r

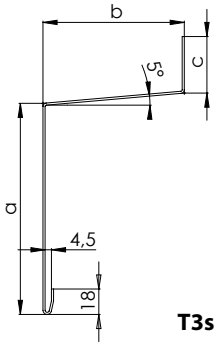

T3s

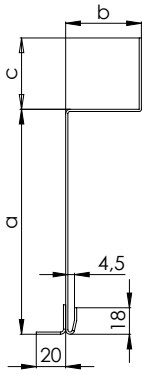

T3u

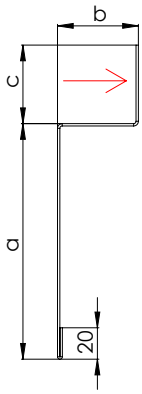

T3z

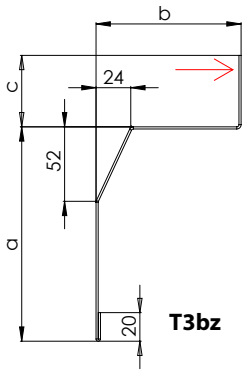

T3bz

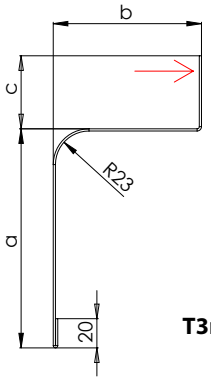

T3rz

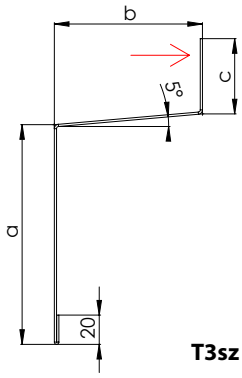

T3sz

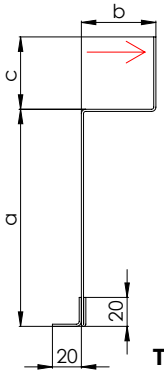

T3uz

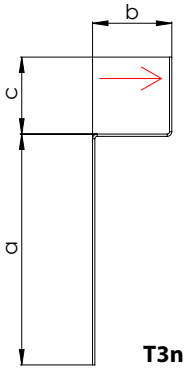

T3n

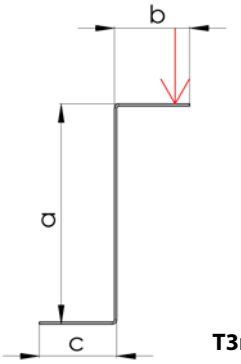

T3n/1

Front Covers type T4

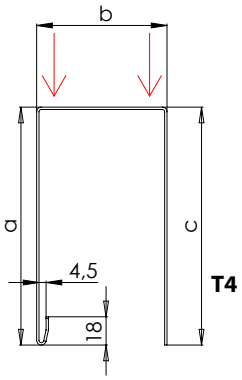

T4

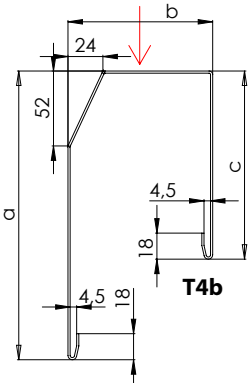

T4b

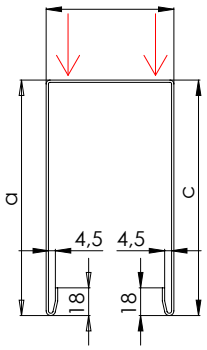

T4c

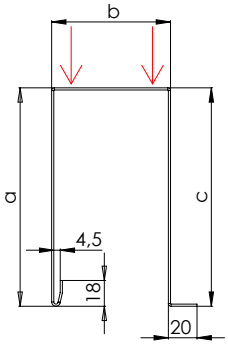

T4d

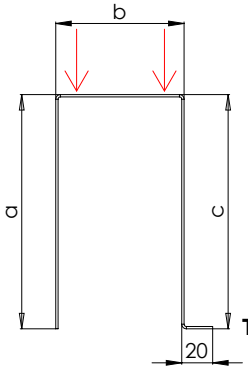

T4d/1

* a – c < 100 mm

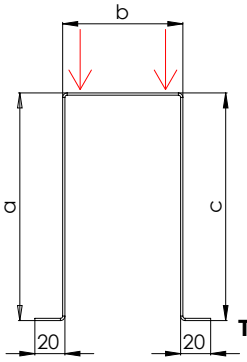

T4d/2

* a – c < 100 mm

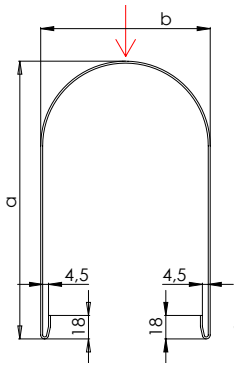

T4r

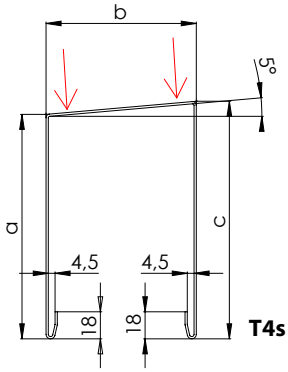

T4s

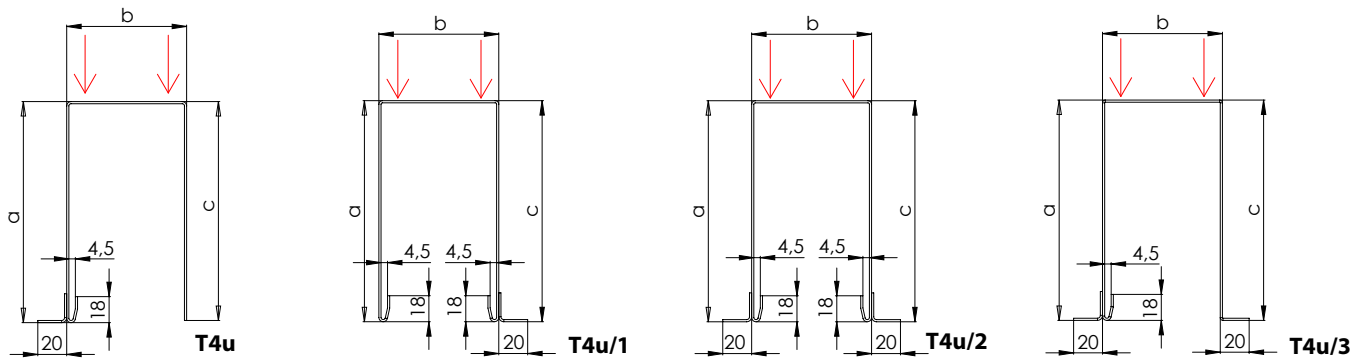

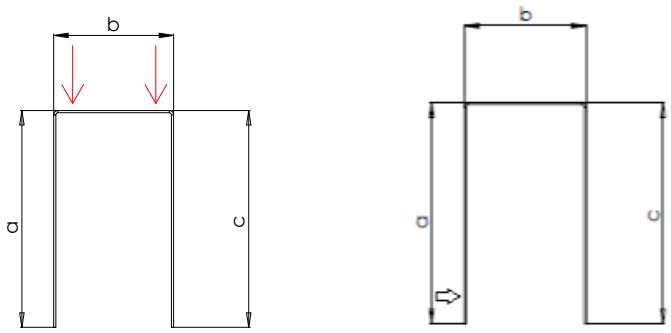

* a – c < 100 mm

*T4d, T4d/1, T4d/2, T4u/3 – option to select front and rear angle 12 mm – 100 mm.

Length expansion of cover plates

When the temperature of aluminium goes up, the metal expands; this phenomenon is called thermal expansion. The coefficient of thermal expansion of aluminium alloy is 23.5 µm/(m * K).

Example:

At a temperature of 20 °C, the cover plate measures 4000 mm, if it is heated to a temperature of 50 °C - on a sunny day, it will subsequently measure 4003 mm due to thermal expansion. As a result of the change in aluminium temperature, there will be an increase in length of +3 mm. When installing the cover plate in the surrounding buildings, it is important to take into account that there may be dimensional changes of the cover plate with respect to the ambient temperature.

When focusing on positioning options, it is important to consider the thermal expansion of the aluminium profile in relation to the temperature of the surrounding environment. We recommend positioning at an ambient temperature of +23 through - 5°C.

Minimum depths of front covers

Blind type	Minimum dimension
CETTA 50	90mm
CETTA 65	115mm
CETTA 80	130mm
CETTA 60F	100mm
CETTA 80F	120mm
CETTA 100F	140mm
SETTA 65	115mm
SETTA 90	140mm
ZETTA 70	120mm
ZETTA 90	140mm

Number of Exterior Blind Holders Based on Width

Blind Width (mm)		Number of holders (pcs)
min.	max.	
0	1599	2
1600	2399	3
2400	3199	4
3200	4199	5
4200	6000	6

For arrangement of holders, consider the following:
- maximum distance between two holders
- motor cable outlet
- symmetry of both holders (identical outer distance) and central holder

Warning: Installation of the holders must be carried out on a base without vibrations in order to minimize the transmission of produced sound.

Front Cover

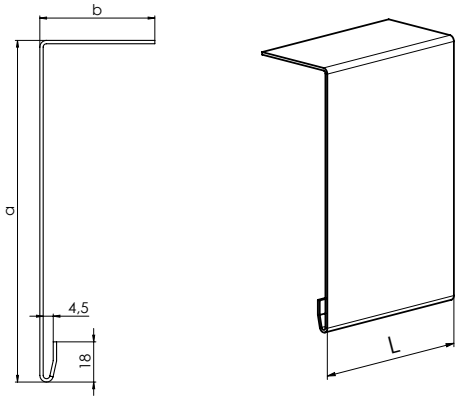

Ordering dimension of front cover

Material:	Al
Thickness:	1,5 mm / 2 mm*
Maximum length of front cover without joint:	4000 mm
Unwound width of cover plate:	L = a +b + c
Color:	any color according to RAL scheme

The side cover of the front cover is supplied upon customer's request.

*recommanded thickness for width over 2500 mm

Extension for variable holder, with cap

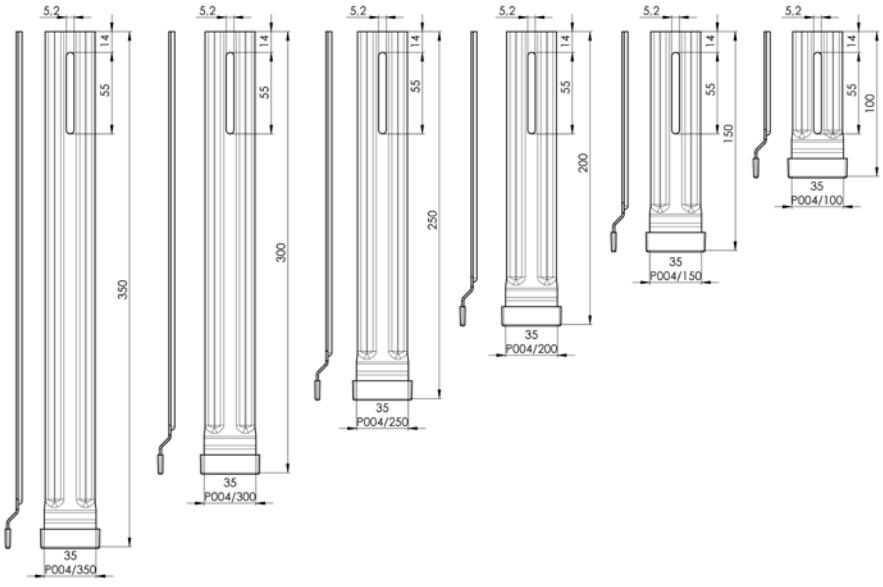

Extension cap of Top front cover (3-03083-0000)

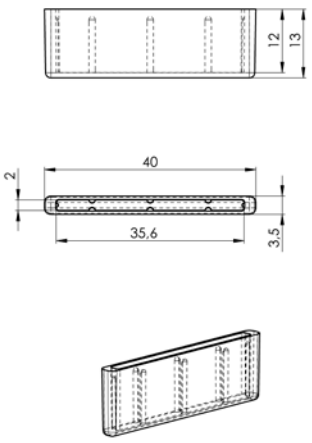

Extension Based on Front Cover Height

Type	Dimension "A"
P 004/100	140 - 190 mm
P 004/150	191 - 240 mm
P 004/200	241 - 290 mm
P 004/250	291 - 340 mm
P 004/300	341 - 390 mm
P 004/350	391 - 440 mm

Measurement

Measurement of the Standard Blind

Both width and height is always to be measured in three points. The manufacturing dimension of the exterior blind is always the smallest measured value. Always carry out measuring after the frame is fitted in the construction aperture, event. window after the internal and external reveals are completed, including parapets.

The method of measuring the exterior blinds is such a specific matter that we recommend always consulting the technical aspects on the site. There are other specific solutions available, as well.

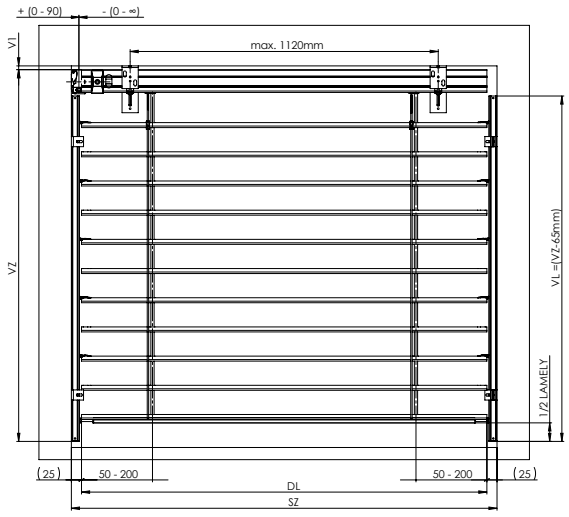

Guidance – guiding channel - perpendicular

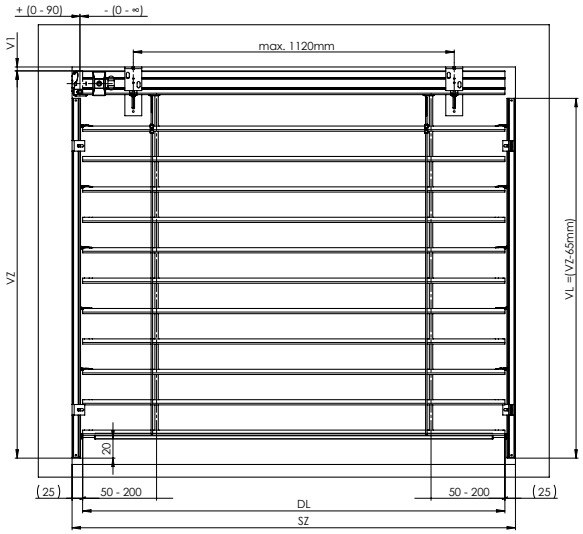

Guidance – guiding channel – non perpendicular

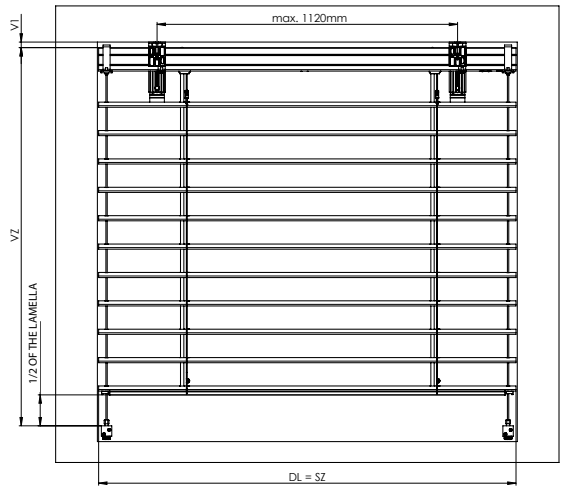

Guidance – wire - perpendicular

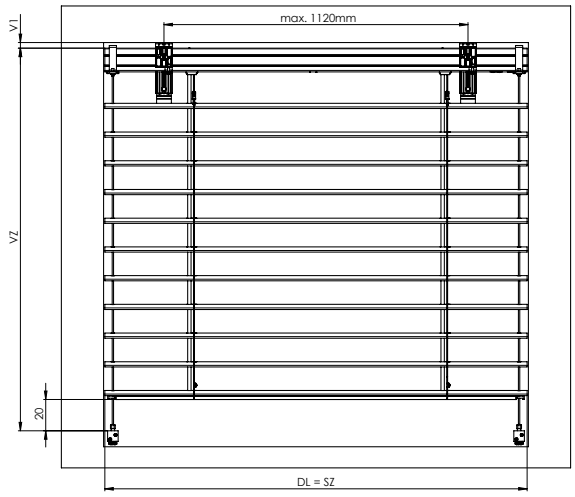

Guidance – wire – non perpendicular

SZ - width of the blind
VZ - height of the blind
DL - length of the lamella
DVL – guide axis (blind axis)
VL - length of the guiding bar
V1 - height by the holder type (see page 92)
VL = VZ – 65 mm
VP – packet height

In the case of control by the engine, the upper profile is shortened by 5 mm. If it is controlled by handle, the length of the profile depends on the shift of the gearbox. The position of the gearbox (possible shift) in the upper profile depends on the actual fitting of the window frame, reveal. The ladder span depends on the choice of the control (it varies within the range of 50 – 200 mm).

ATTENTION! For sloped blinds always specify all possible sizes (width, bigger drop, smaller drop, hypotenuse length). Sloped blinds are produced only with motor control and wire guiding which needs specific tensioning (see amendment of this manual)

The space between the bottom edge of head rail 56/58 and the first slat in closed position

Cetta 60 Flexi	41 - 93 mm
Cetta 65	32 - 92 mm
Cetta 80	35 - 103 mm
Cetta 80 Flexi	38 - 106 mm
Cetta 100 Flexi	85 - 169 mm
Zetta 70	44 - 104 mm
Zetta 90	62 - 142 mm
Setta 65	44 - 104 mm
Setta 90	66 - 152 mm

Connected Blind Measuring

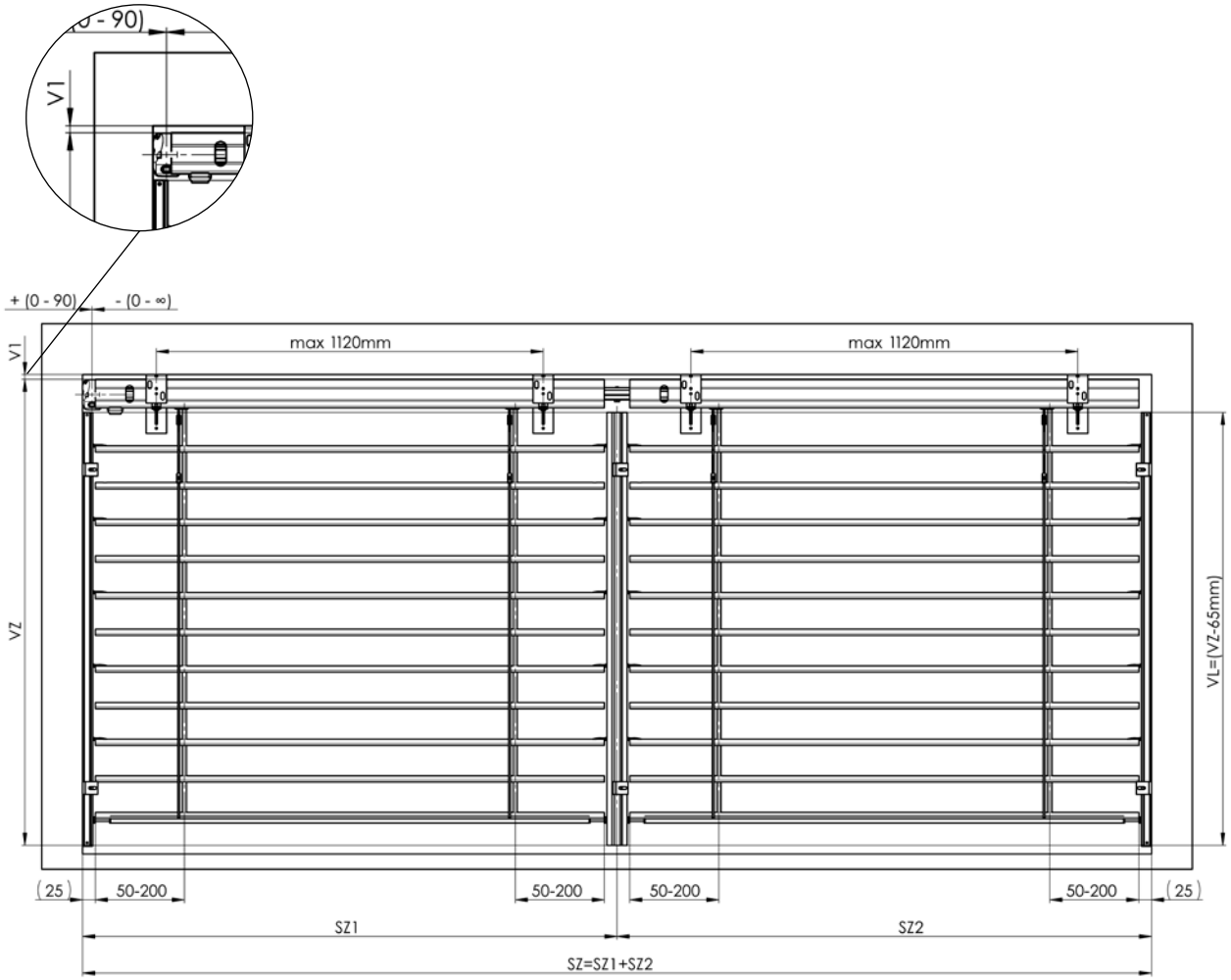

Standards for arrangement of additional guide cord

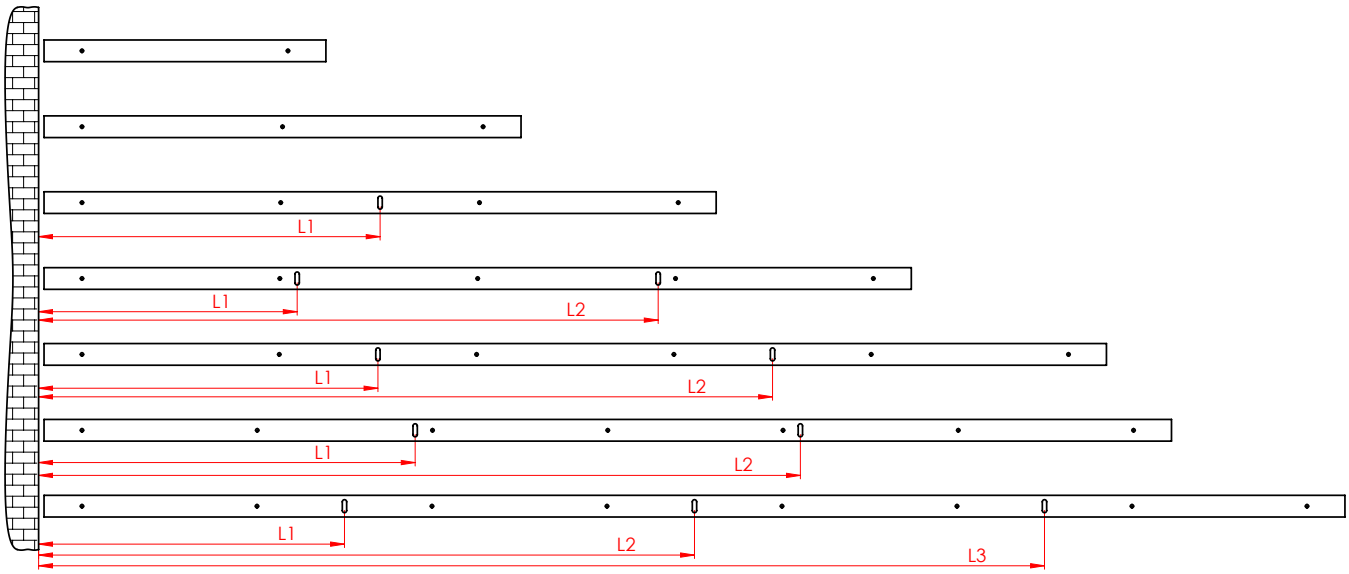

Standard Exterior Blind Assembly Procedure

The assembly may only be performed by a qualified professional employee!

Construction preparedness for the assembly:
· finished reveal, coloured facade, finished outside parapets

INSPECTION:
· Before assembly we recommend inspecting all the parts after the delivery of the goods to prevent any problems. The manufacturer must be notified of any defects or comments concerning the assembly or blinds.

ASSEMBLY TOOLS:
1. Tape measure
2. Water gauge
3. Pencil
4. Hammer
5. Electric drill as per the source material
6. Cordless electric drill
7. Magnetic adapter
8. Bits PZ2, PH2, magnetic adapter on hexagonal head 8 and 10
9. set of Allen wrenches
10. Assembly cable
11. Small ratchet wrench and 8 nut
12. Female screw spanner No. 10 and 13
13. Set of screwdrivers, insulated, electric

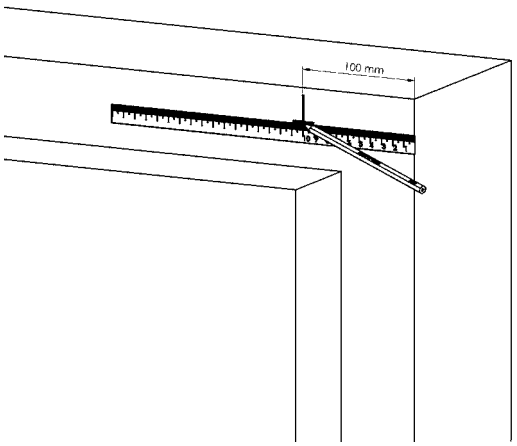

1.

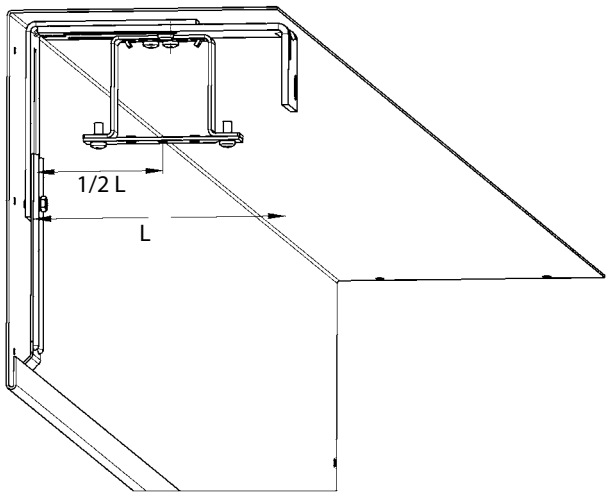

2.

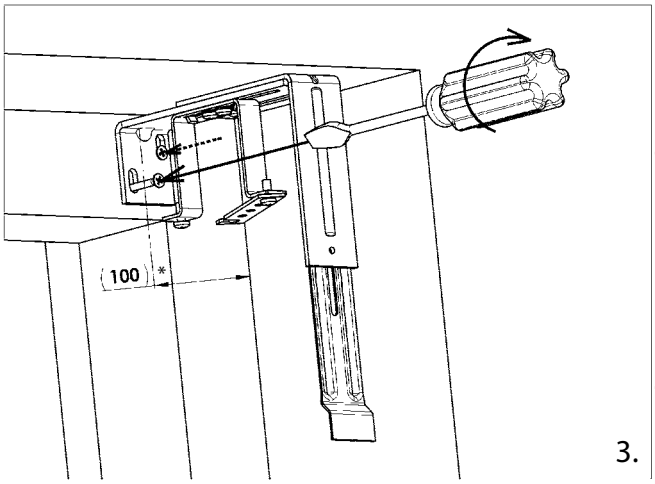

3.

* For motor blinds with a width less than 800mm – the value may vary.

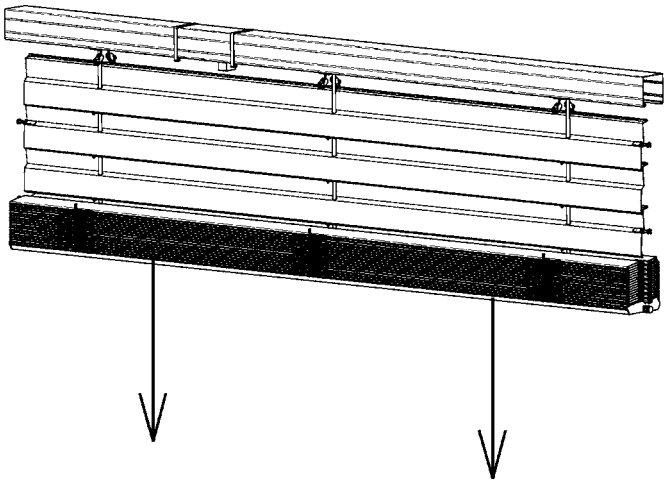

4.

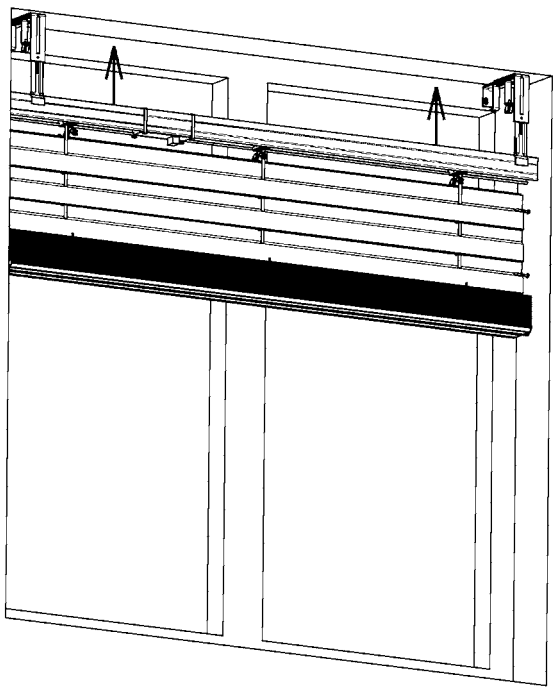

5.

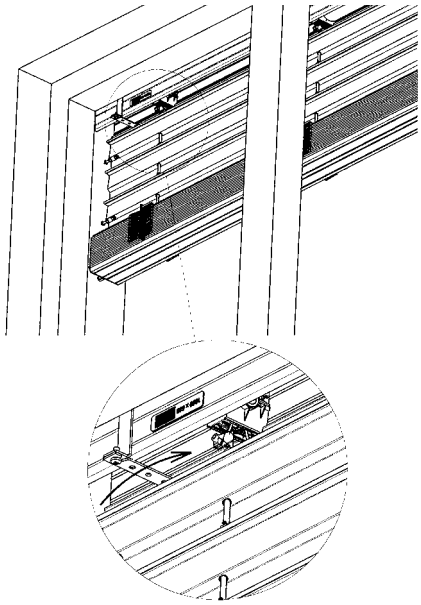

6.

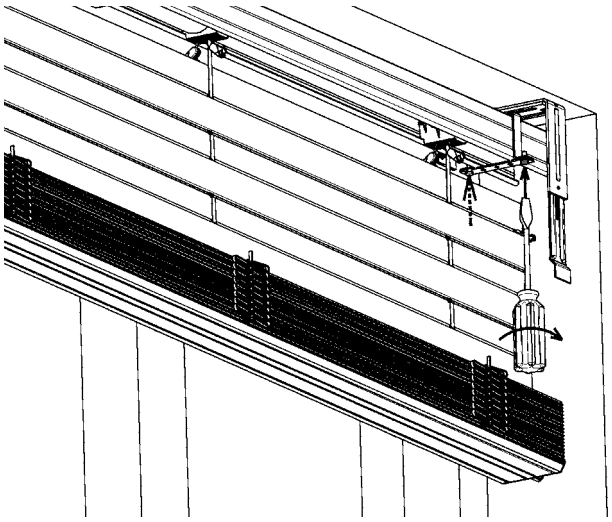

7.

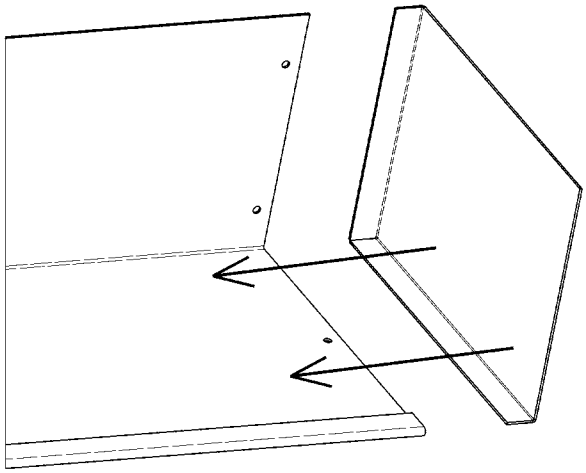

8.

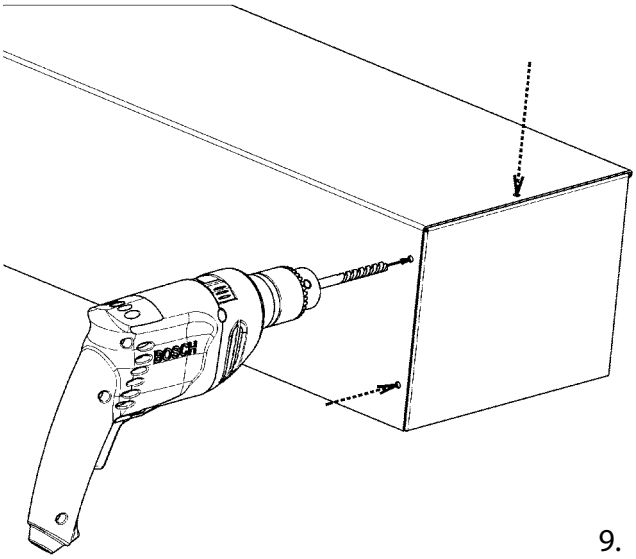

9.

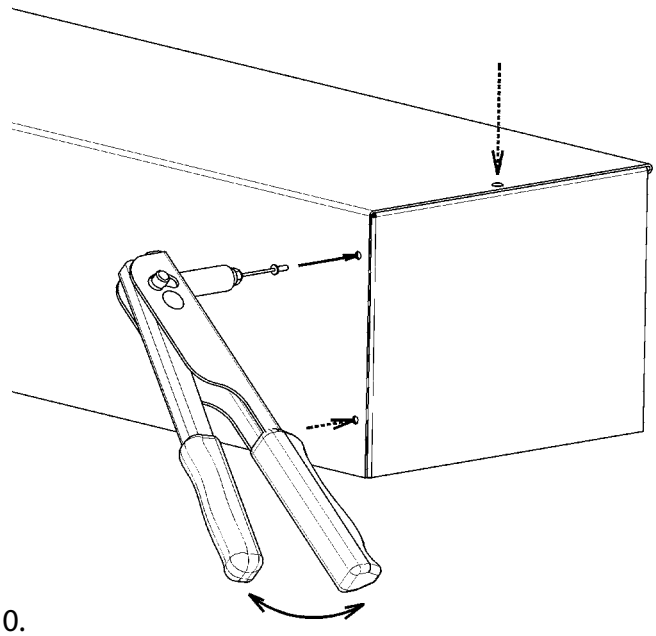

10.

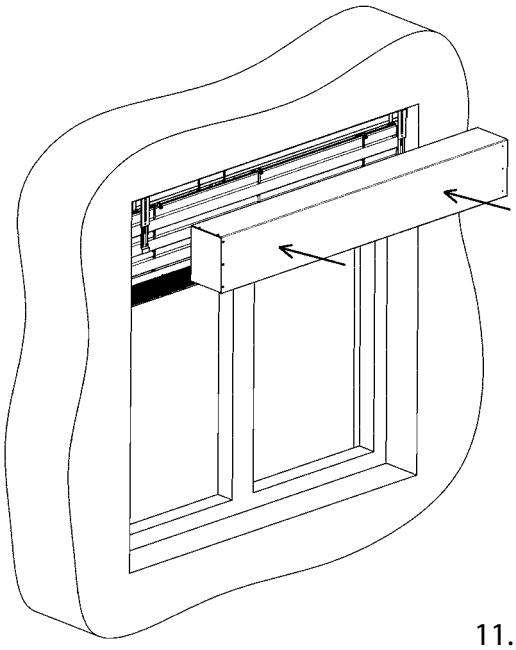

11.

12.

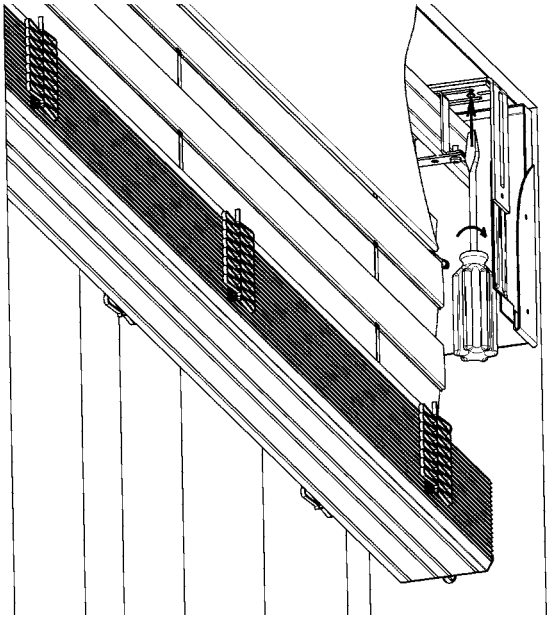

13.

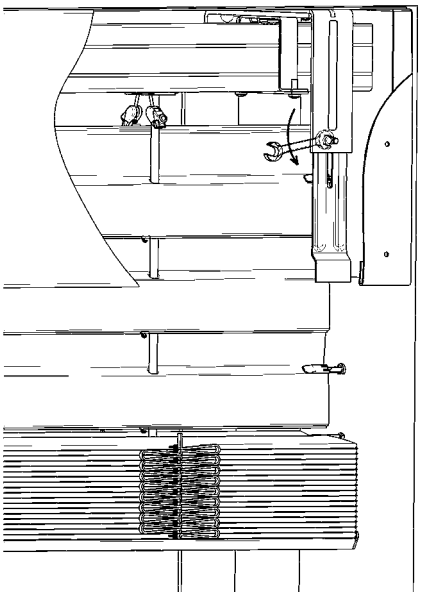

14.

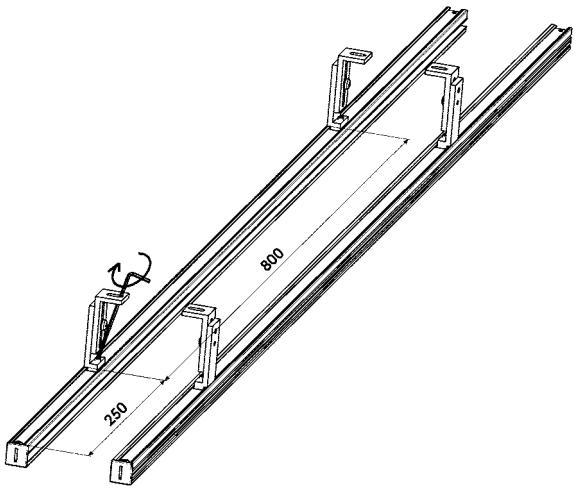

15.

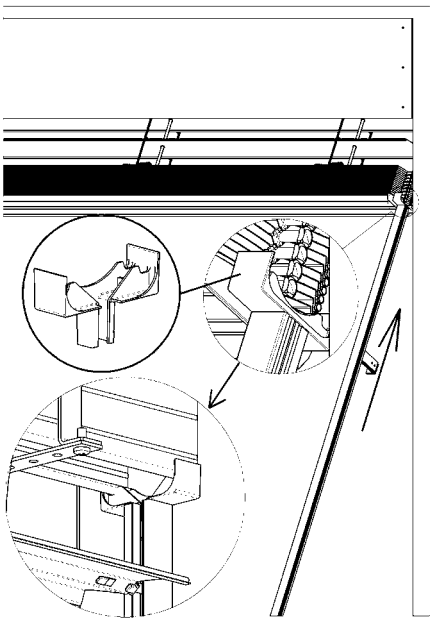

16.

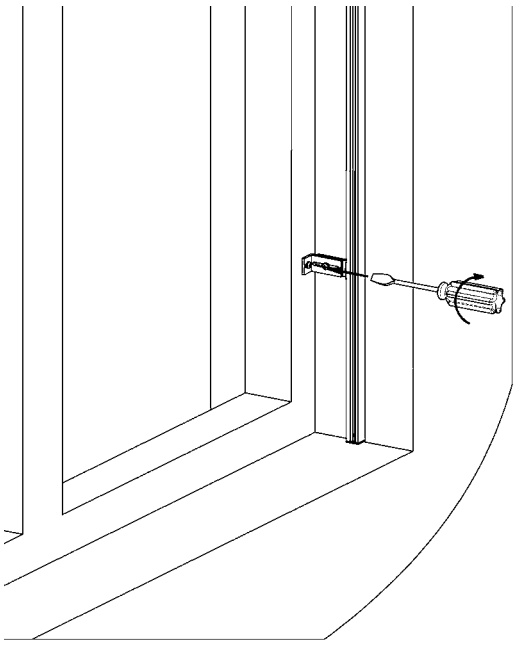

17.

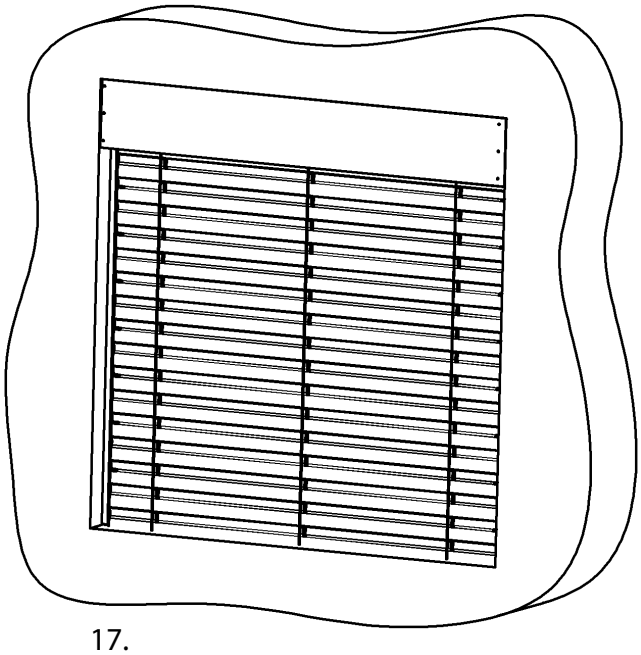

Basic types of assembly

Assembly of the blind into the created pocket (ceiling/wall)

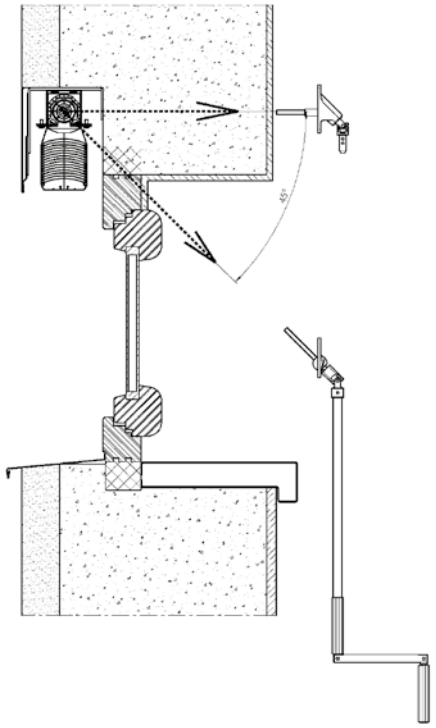

Assembly of the blind into the reveal on the window frame (ceiling/wall)

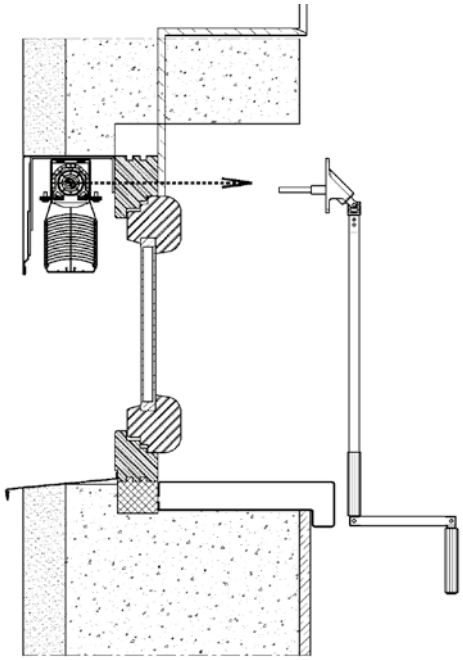

Assembly of the blind into the reveal on the expansion frame (ceiling/wall)

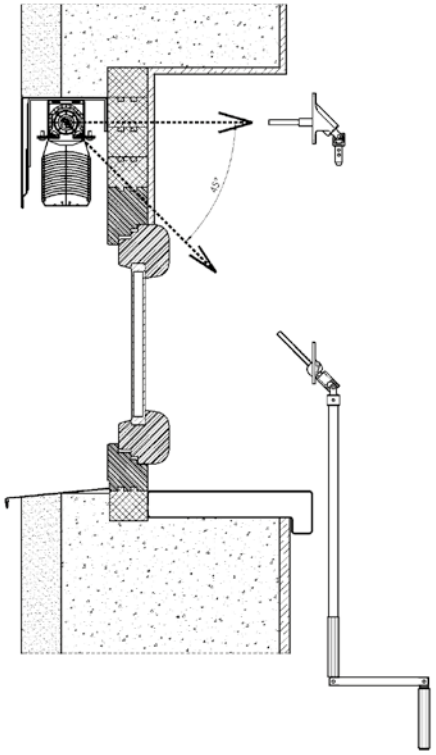

There are two alternatives for all three basic assembly types:

a) Cover box

ASSEMBLY PROCEDURE:

1. Measure the hole and compare with already prepared blind, check the control mechanism.
2. Allocate the blind holders so they do not interfere with the cloth strips.
3. Fix the holders horizontally.
4. Insert the blind into the sleeves in the holders and secure. Do not tighten screws for the sleeves.
5. Prepare the passage for control using the handle or the cord. If there is an electric control, connect the socket.
6. From the inside passage attach the handle; if the drift is long, shorten it to the necessary length. Stretch the endless cord through the created hole. Attach the cover for the passage of the cord.
7. Tighten the screws on the sleeves in the holders.
8. Equip head rail with black guiding rail arresting brackets. On the lamella guides attach the guiding bars which are already fitted with the holders for the guiding bars, guiding rail in top part fit in black aresting bracket and attach them on the window frame or into the reveal (for assembly into the reveals, the guiding bar holders are not used and the guiding bar is attached through the holes created in the body of the guiding bar). Guiding rails have to be installed with aresting bracket on the center of head rail.
9. Lower the blind into the lower position (attach the holders for wires if the blind has wire guided lamellas). At the same time, check that the guiding bars or wires do not clamp the lamellas. Check the vertical position of the guiding bars.
10. When the lamellas are tilted, attach the cover box to the holders, insert the prolongation of the holder (tighten the fixation screw) into the pocket created on the cover metal sheet and secure the cover sheet using the screw through the hole in the holder for the blind .
11. The blind driven by the engine can be inspected using the assembly cable or adjust the end positions of the engine and the connection to the supply cable.
12. Fix the holders of the handle in the interior. Connect the control switch according to the connection diagram supplied.

b) The cover box incorporated into the heat-insulation system or the peripheral shell

ASSEMBLY PROCEDURE:

1. Attach the blind holders.
2. Attach the cover sheet (can also be with side parts), insert the prolongation for the holder (tighten the fixation screw) into the pocket created in the cover sheet and secure through the hole in the holder with the screw (texem).
3. Drill the passage for control by the handle.

After heat insulation or production of the peripheral shell, the assembly of the blind is according to the previous manual.

Note:

For correct guiding wire tensioning follow the process below:

1. After choosing the correct position of wire guiding bracket and its screwing it is necessary to release the plastic housing with female screw up to edge of the tensioning screw thread (unscrew).
2. Put the wire through the tensioning screw.
3. Push the whole tensioning mechanism upwards to the bracket body, hold the wire in slightly tensioned position and fix it with M4 screw with cross-point screwdriver.
4. Turn the plastic housing by 3-4 turns and tension the wire. Remove the waste wire below the bracket.

It is necessary to keep prestressed 2mm tolerance between upper part of wire bracket and lower part of tensioning screw.
By following the above steps you will assure correct wire guiding tension.

Alternative Designs of Exterior blinds



- **DUO System**
- **Atypical Designs of Exterior Blinds**
- **Connected Exterior Blinds**
- **Double Head Rail Exterior Blinds**
- **Exterior Blind Windstabil**
- **Solar Power Supply of Exterior Blinds**

ISOTRA *Quality*

Alternative Designs

DUO System (double slat tilting)

Applies to the handle / motor control: Cetta 65, Cetta 80, Cetta 60, 80 and 100 Flexi

Upper blind part or lower blind part closed is available. It is impossible to fully open all slats at the same time. Different slat tilting is achieved by the ladder shortened on one side.

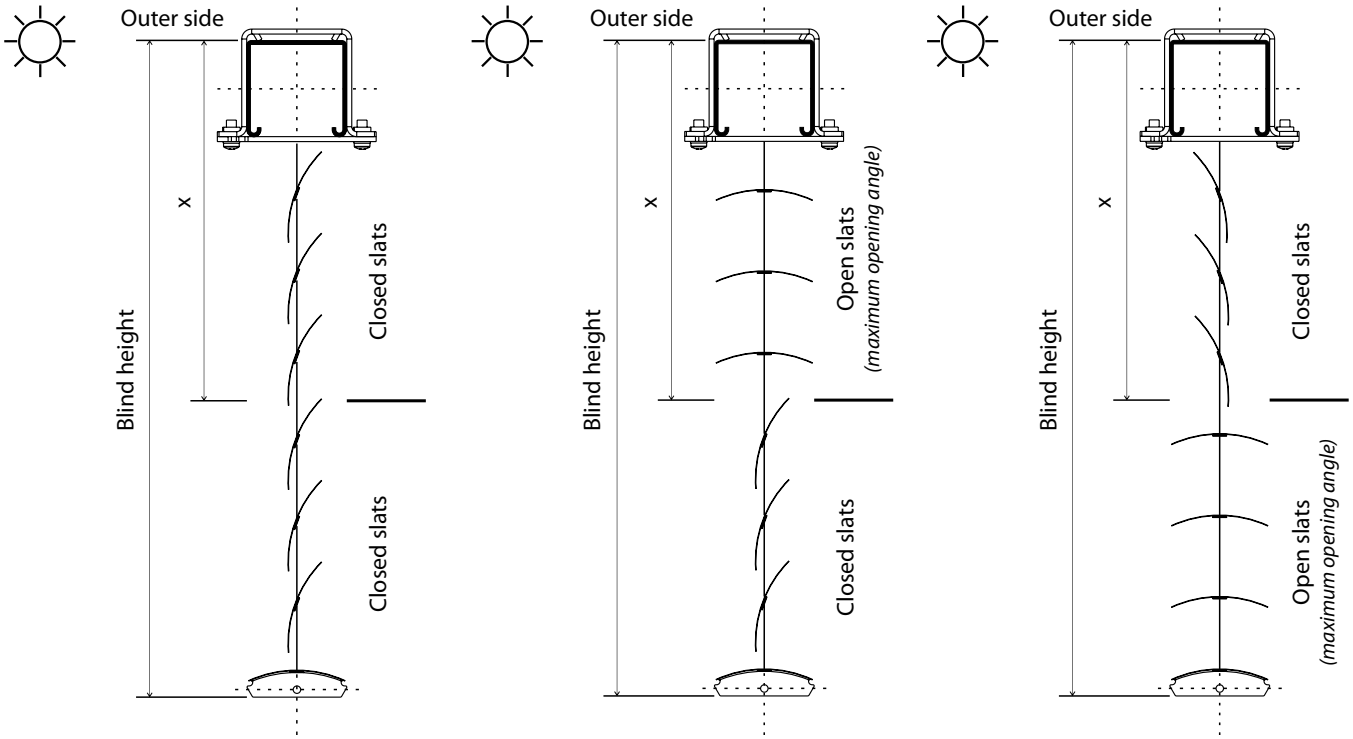

Slats closed at the bottom – opened at the top
work room / living room

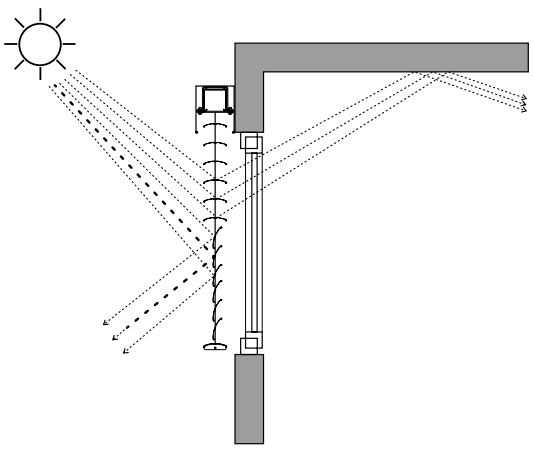

Slats closed at the top – opened at the bottom
conference / training room

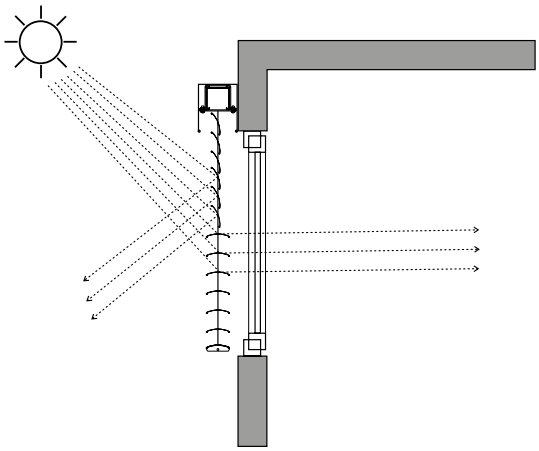

X = height for DUO design
Height measured from the upper edge of head rail. The height (in mm) needs to be stated in the order form. The precise division of slats is given by manufacture according to the ladder span.

Note: Arrangement (height) for the DUO design can be adapted to special spatial conditions.

Alternative Designs

Atypical Designs of Exterior Blinds

All atypical designs can be controled by motor or handle limited by specified angle.

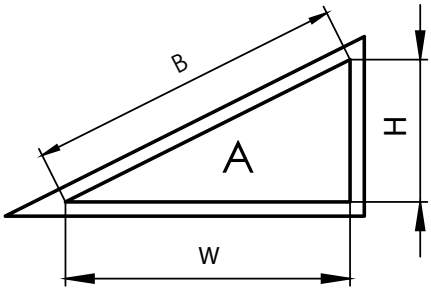

Blinds impossible to pull up.

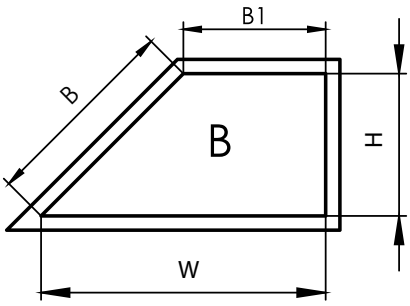

Blinds impossible to pull up.

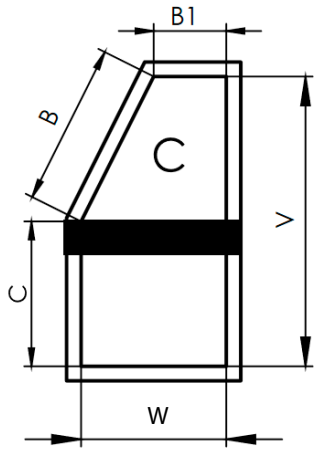

the blind can only be pulled up until it is slanting

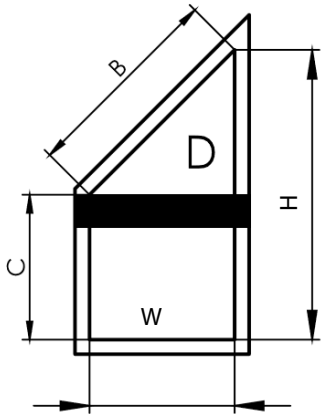

the blind can only be pulled up until it is slanting

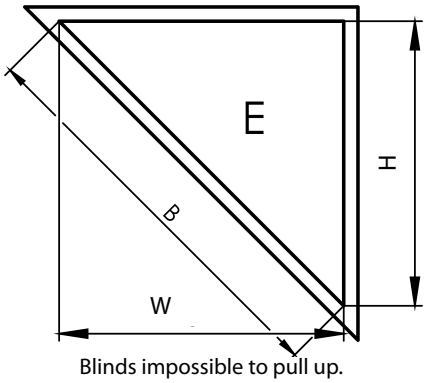

Blinds impossible to pull up.

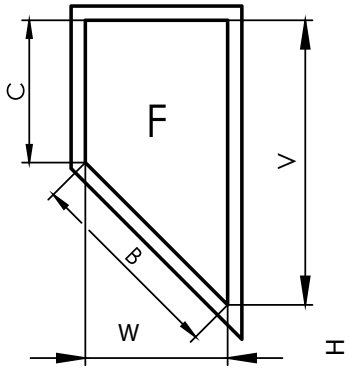

Blinds impossible to pull up.

Standard/produceable dimensions

Blind type	Width (mm)* standard		Height (mm) standard		Angle standard	Width (mm)* produceable		Height (mm) produceable		Area (m²)
	min.	max.	min.	max.	max.	min.	max.	min.	max.	max.
C100 F handle shaped	600	4000	500	4000	64 °	400	4000	300	4800	8
C100 F motor shaped	600	4000	500	4000	64 °	400	4000	300	4800	16
C60 F handle shaped	600	4000	500	4000	52 °	400	4000	300	4800	8
C60 F motor shaped	600	4000	500	4000	52 °	400	4000	300	4800	16
C65 handle shaped	600	4000	500	4000	53 °	400	4500	300	4800	8
C65 motor shaped	600	4000	500	4000	53 °	400	4500	300	4800	24
C80 F handle shaped	600	4000	500	4000	60 °	400	4000	300	4800	8
C80 F motor shaped	600	4000	500	4000	60 °	400	4000	300	4800	24
C80 handle shaped	600	4000	500	4000	60 °	400	4500	300	4800	8
C80 motor shaped	600	4000	500	4000	60 °	400	4500	300	4800	24
S65 handle shaped	600	4000	500	4000	56 °	400	4500	300	4800	8
S65 motor shaped	600	4000	500	4000	56 °	400	4500	300	4800	24
S90 handle shaped	600	4000	500	4000	65 °	400	4500	300	4800	8
S90 motor shaped	600	4000	500	4000	65 °	400	4500	300	4800	24
Z70 handle shaped	600	4000	500	4000	56 °	400	4500	300	4800	8
Z70 motor shaped	600	4000	500	4000	56 °	400	4500	300	4800	24
Z90 handle shaped	600	4000	500	4000	63 °	400	4500	300	4800	8
Z90 motor shaped	600	4000	500	4000	63 °	400	4500	300	4800	24

*For widths over 3500 mm, the upper aluminium profile will be supplied automatically.

Using of motors for inclined blinds plane

For all types of atypical blinds (A, B, C, D, E, F), the following motors can be used: Geiger, Somfy WT, Somfy IO, Elero

Alternative Designs
Connected Exterior Blinds

The connected Exterior blinds always have a connected rod and joint control. The handle or motor control can be installed in any place (on the right, on the left, in the center) and on any blind of the group.

Cetta 65, Cetta 80, Cetta 60, 80 and 100 Flexi, Setta 65, Setta 90, Zetta 70 and Zetta 90 Exterior blinds can be connected (not Cetta 50).
It is also possible to connected blinds in the HELUZ lintel.

Maximum area of connected motor-controlled Exterior blinds: 20 m^2
Maximum area of connected handle -controlled Exterior blinds: 8 m^2
Maximum number of connected Exterior blinds: 3

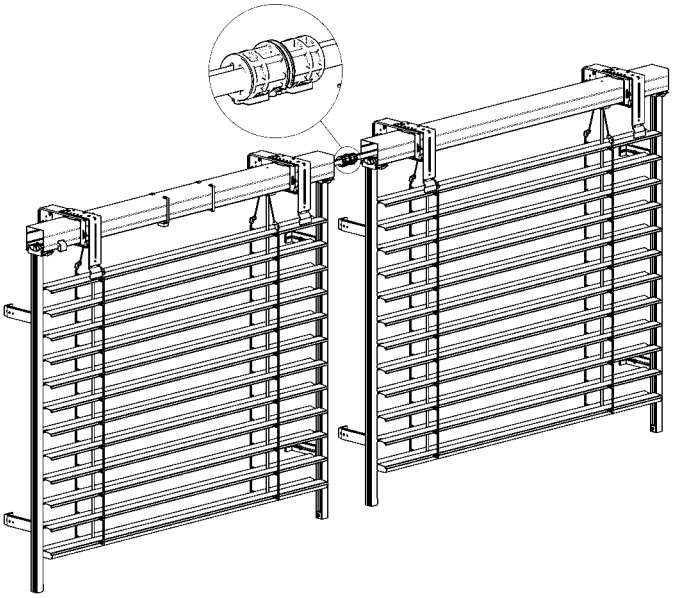

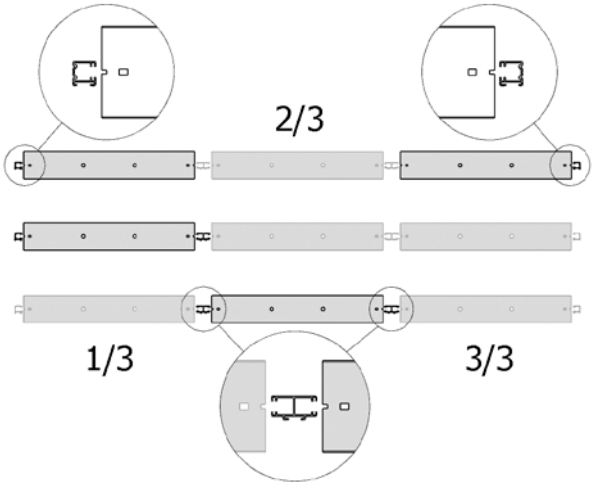

The shaft is always 5 mm shorter than the manufacturing dimension of the blindregardless of shortening of the upper channel, if made.

Rod connector P 077/3

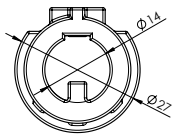

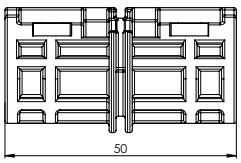

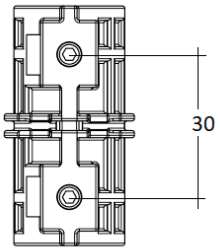

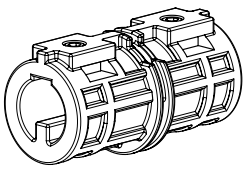

Cardan shaft coupling P 313

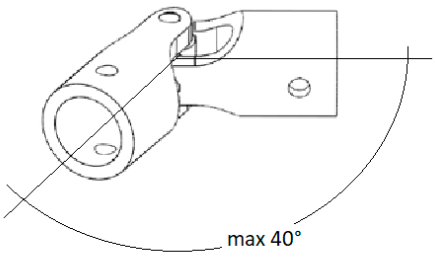

Max. angle per one coupling is 0–40 degrees.

2x imbusted screw

Required components: rod connector
Usable components: double guiding channel, single guiding channel

It is required to follow the below-listed rules when connecting the axial profiles:
- both driving and driven blinds must be installed at identical horizontal and vertical planes
- blinds must be connected in their identical coiling positions
- for easier installation, shortening of the head rails by 50 mm on both connected sides can be required
- axes of connected blinds must be approximately 10 mm apart; notches in the axes should be on the bottom blind side, if possible.

Alternative Designs

Double Head Rail Exterior Blinds (2-01334-0000-0)

If the width of blind is in the range of 400 - 600 mm in motorised version, we offer you the possibility of double Head Rail Exterior Blinds. Two head-rails placed above each other are connected with light weighted gearings. Motor is placed in upper head-rail and bearing in the lower one.
Head-rail with motor can be placed also next the head-rail with bearings if there is enough space in lintel (packet height remain same).

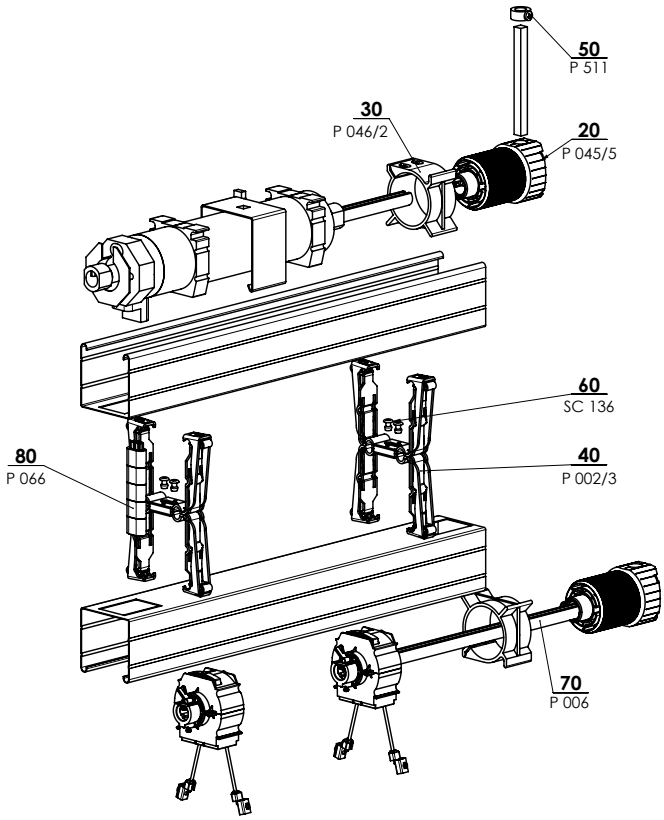

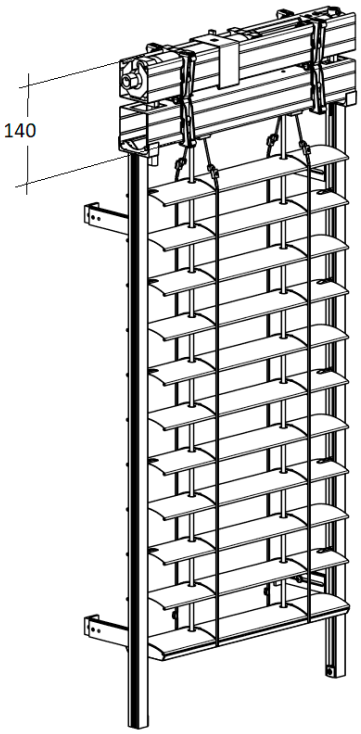

ADDITIONAL CHANNEL 2-01335-XXXX-0

Position	Item name	Business name - Abbreviation 2	Order number - Abbreviation 1
20	Plastic gearing 8-mm square	P 045/5	6-013232-0000
30	Gearbox holder, body 46 mm	P 046/2	6-013234-0000
40	Mechanic upper head rail hanger - Fe profile with isolation	P 002/3	6-012663-0000
50	Ring for hexagonal wire metal	P 511	6-001242-0000
60	Riveting rivet Al 4x10 DIN 7337 A, colorless	SC 136 0000	6-002680-0000
70	Shaft	P 006	7-300198-0000
80	Extension of the Geiger motor limit switch	P 066	6-012561-0000

Alternative Designs

Exterior Blind Windstabil (2-01127-0000-A)

Windstabil version for **Cetta 80** and **Zetta 90** blinds. This is a technological increase in the windscreen resistance parameter via additional strings.

Technical parameters:

- side line with the guide rail P080
- max width 3000 mm, maximum height 3600 mm
- max surface for engine drive: 9 m^2
- wind resistance class: 5

Supportive guiding wires

Blind width (mm)	Supportive guiding wires
up to 1499	2 pcs (fixed to the side guiding rail)
1500 – 1999	2 pcs (fixed to the side guiding rail + 1 pc in the middle
2000 - 3000	2 pcs (fixed to the side guiding rail + 2 pcs in the middle)

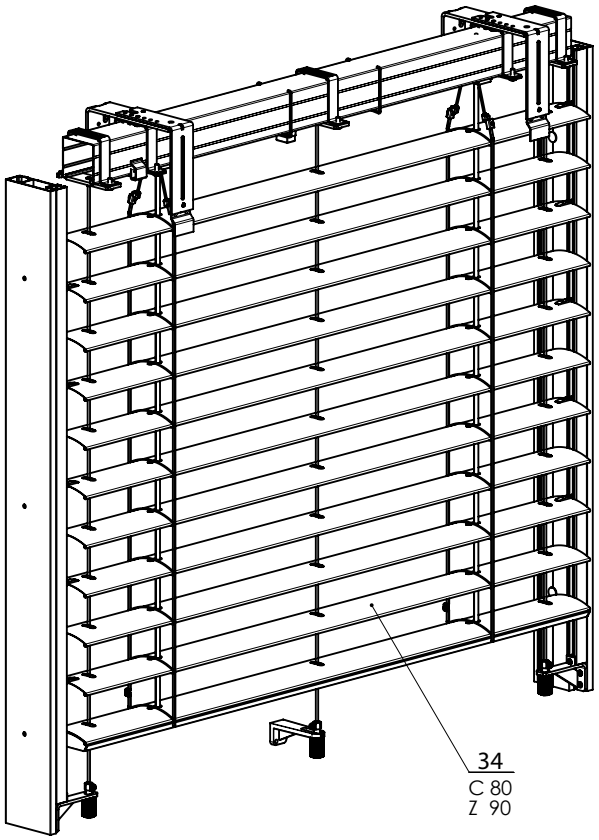

WINDSTABIL 2-01127-XXXX-A



Alternative Designs

Solar Power Supply of Exterior Blinds

The exterior blind with solar power supply is a unique and fully automated blind that is wireless controlled and has zero power consuption. The exterior blind operates on the principle of the so-called photovoltaic phenomenon – i.e. the conversion of solar radiation into elektricity. It can be only used for channel 56x58 mm. Maximum guaranteed ares is 8 m^2. One solar unit is only adapted for one exterior blind.



Compostion of the solar set:
- motor JA04 Soft DC 4Nm 33 revolutions 12 V
- receiver Combio-868 JA DC
- power unit DC
- Quickconnect IP65

Remote controls are ordered separately, e.g.: MonoTel 2, single-channel - white, silver, titangrey
TempoTel 2, 10-channel (timer + Astro) - white, silver, titangrey
VarioTel 2, 5-channel - white, silver, titangrey



Motor ELERO JA 04 SOFT DC, 4Nm (6-015554-0000)

Name	Technical data
Torque	4 Nm
Turns	33 turns/min.
Voltage	12V
Frequency	-
Soft brake	-
Current consumption	4A
Power	48 W
Protection class	IP 44
Limit switch range in turns	85 turns
Length (without couplings in mm)	260
Weight	1,6 kg
Ambient temperature	-20°C to +60°C
Cable	0,8 m with Quickconnect

Adapter for shaft (6-001624-0002)
Receiver Combio-868 JA DC (6-015555-0000)

Name	Technical data
Torque	10 Nm
Voltage	12 – 13,5 V DC
Current consumption	3,75 A
Power	45 W
Switching consumption	100 mA
Protection class	IP 56
Max. number of transmitters	16
Dimension (mm)	100x40x15
Weight	1,6 kg
Ambient temperature	-20°C to +60°C

Assembly:
- The panel area must face down.
- Ideal position of the solar panel is at right angle to the sun.
- The battery case must always be placed above the solar panel.

Energy unit DC Solar (6-018680)
- including battery and connecting cable

Name	Technical data
Power	13,2 V DC
Protection class	IP 44
Dimension (mm)	523 x 50 x 83
Okolní provozní teplota	-20°C to +60°C
Type of rechargeable battery	$LiFePo_4$
Rated voltage	13,2 V
Output (peak)	4,2 ± 10% W
Rechargeable battery capacity	2400 mAh
Energy	33 Wh
Protection against excessive discharge, overloading, overcharging	Built-in rechargeable battery management system
weight (including battery)	1100 g

CAUTION

The 12 V Combio receiver (used in the exterior blind's solar set) only allows one-way communication. All Elero remote controllers allow both one-way and two-way communication, but for smooth functioning with the solar set, the Elero remote controller must be switched to one-way communication using the switch on the back side. Caution: The Multitel 2 controller cannot be used for controlling 12 V one-way motors!



Back side of the device

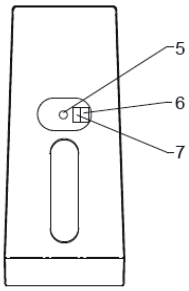

5 Programming button P

Only for specialists:
6 DIP switch No. 1
7 DIP switch No. 2

Remove the rubber cap at the back side of the remote controller and toggle switch No. 2 in the remote controller to the OFF position.

One-way radio control system of 12V drive

The term "one-way radio system" denotes the transmission of radio signals to the radio receiver. In contrast to two-way radio systems, one-way radio receivers cannot send information about the equipment status back to the transmitter. It is also not possible to forward radio signals between the individual radio receivers to ensure better signal transmission.

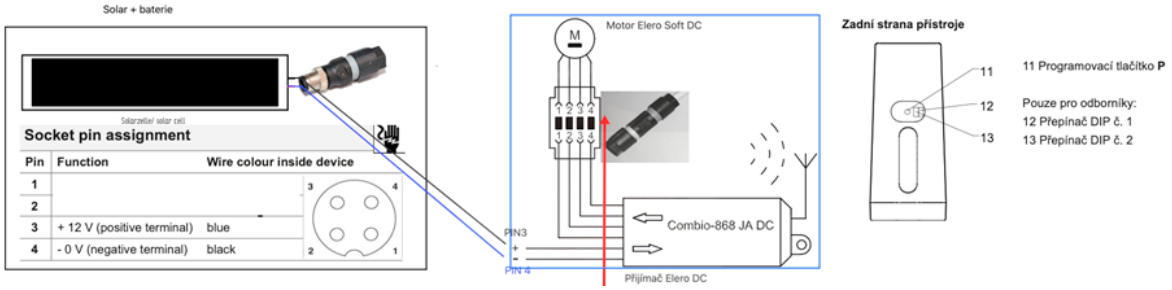

QUICKON terminal assignment	
Terminal 1: brown	▲ (up)
Terminal 2: white	+ (plus)
Terminal 3: blue	▼ (down)
Terminal 4: black	– (minus)

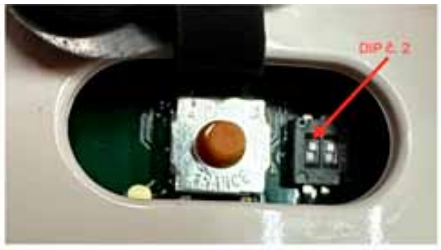

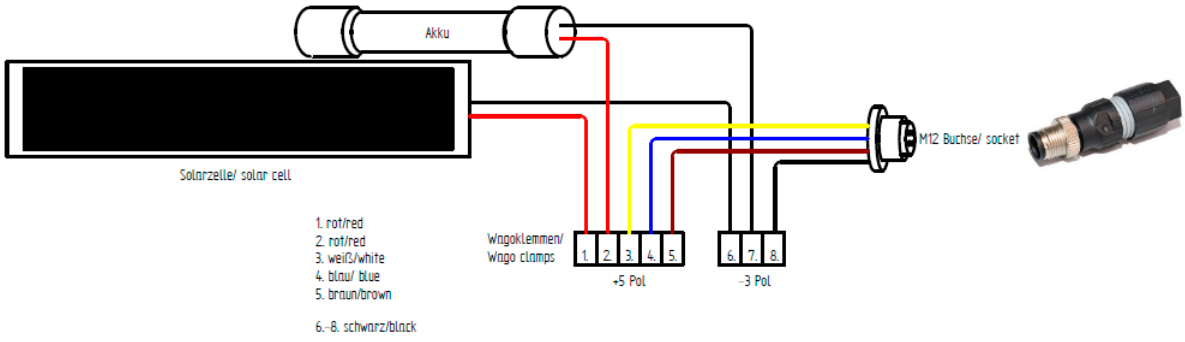

1. Connect the solar panel with the receiver.
2. Connect the receiver with the motor.
3. After connecting, press the programming button on the controller, until the blind starts to jog.
4. Select the controller channel to which it is to be saved.
5. Once upward movement starts, immediately press the UP button on the controller.
6. Once downward movement starts, immediately press the DOWN button on the controller.
7. The blind stops jogging and the settings are saved.

To possibly delete, reset the receiver, press all four buttons (up+stop+down+prog) before the red light on the controller lights up!

Compatible controllers: Tempotel 2, Variotel 2, Monotel 2
All controllers must be switched to one-way mode, DIP No. 2 in upper position, see above.







Installation:

- Minimum panel covering with solar radiation: 60%.
- The solar panel should ideally be placed perpendicular to the incidence of solar radiation.

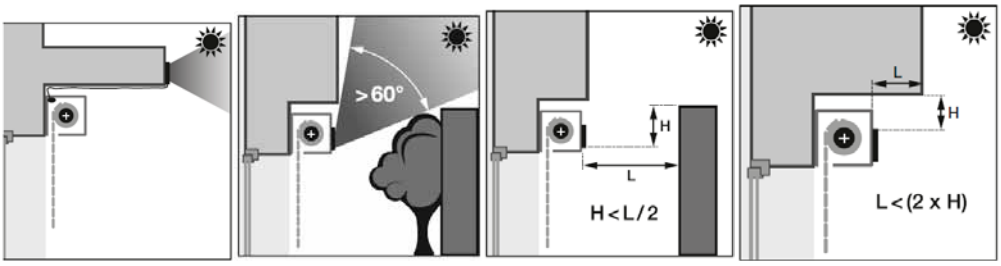

Special Designs





- Chain Blind TITAN 90
- Sloped Blind Cetta 80F TE
- Facade Exterior Blinds
- Self-Supporting Blinds STS
- Self-Supporting Blinds VIVA
- Self-Supporting Blinds BRAVO
- Lintel Exterior Blinds HELUZ
- Safety blind EMERGENCY

ISOTRA *Quality*

Titan 90

Basic Product Specification

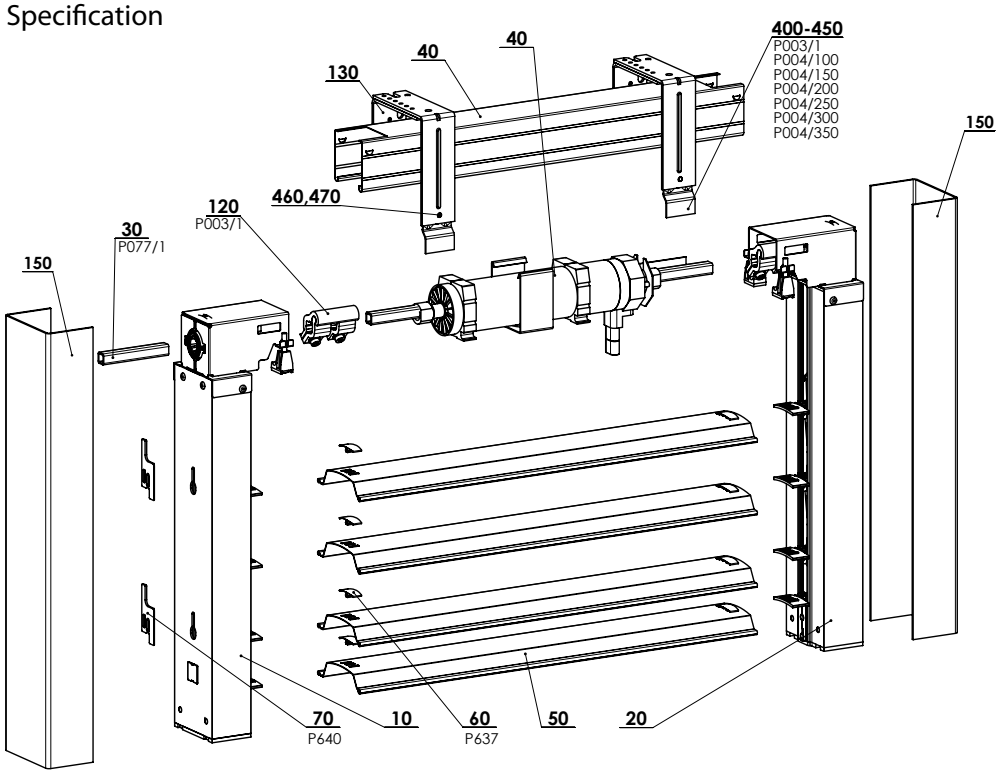

TITAN 90 - MOTOR 2-01070-xxxx-4

Specification Titan 90

	Head Rail	Bottom Rail	Slat	Guiding Channel
Commercial Name **Dimension (mm)** **Material**	P001/1 56 x 58 Fe	-	O 123/XXXX 0,60 x 122,8 Al	P 018/81 PU52 80x49,2 Al
Color	galvanized steel plate other RAL colors sprayed, DECORAL*		According to current ISOTRA a.s. scheme	Varnished in RAL colors, DECORAL*

*Maximum dimension 4000mm.

We do not make atypical designs.

Standard Dimensions

Widht (mm)		Height (mm)		Guaranteed Area (m^2)
min.	max.	min.	max.	max.
600	2800*	500	4000	8

Note: The wider the blind, the lower its wind resistace class - see "Wind resistance of exterior blinds", page 3-4.

Titan 90 - motor (2-01070-XXXX-A)

Position	Item name	Business name - Abbreviation 2	Order number - Abbreviation 1
10	Floor of chain blind - right		2-01068-0000
20	Floor of chain blind - left		2-01069-0000
30	Spindle Shaft - SHORT		3-02564-0000
40	Upper Chain Channel - Long		2-01113-0000
50	Chain slat 90		2-01114-PU01
60	Slat fuse	P 637	3-02444-0000
70	Spacing pad	P 640	3-02670-7040
80	Packaging of exterior blinds		2-00342-0000
120	Head rail bracket	P 003/1	2-00112-0000
130	Shaft coupling square	P 077/1	2-01065-0000
150	Under-plaster rail	P 018/82	3-03112-XXXX
400	Extension of front cover holder- 100 mm	P 004/100	3-00156-PU22
410	Extension of front cover holder- 150 mm	P 004/150	3-00157-PU22
420	Extension of front cover holder- 200 mm	P 004/200	3-00158-PU22
430	Extension of front cover holder- 250 mm	P 004/250	3-00159-PU22
440	Extension of front cover holder- 300 mm	P 004/300	3-00950-PU22
450	Extension of front cover holder- 350 mm	P 004/350	3-00960-PU22
460	Screw M5x8		6-002353-0000
470	Pad M5, DIN 125-1A,5.8 Zn		6-002350-0000

TITAN 90 EXTERIOR BLIND DIAGRAM

VERTICAL SECTION **MOTOR CONTROL**

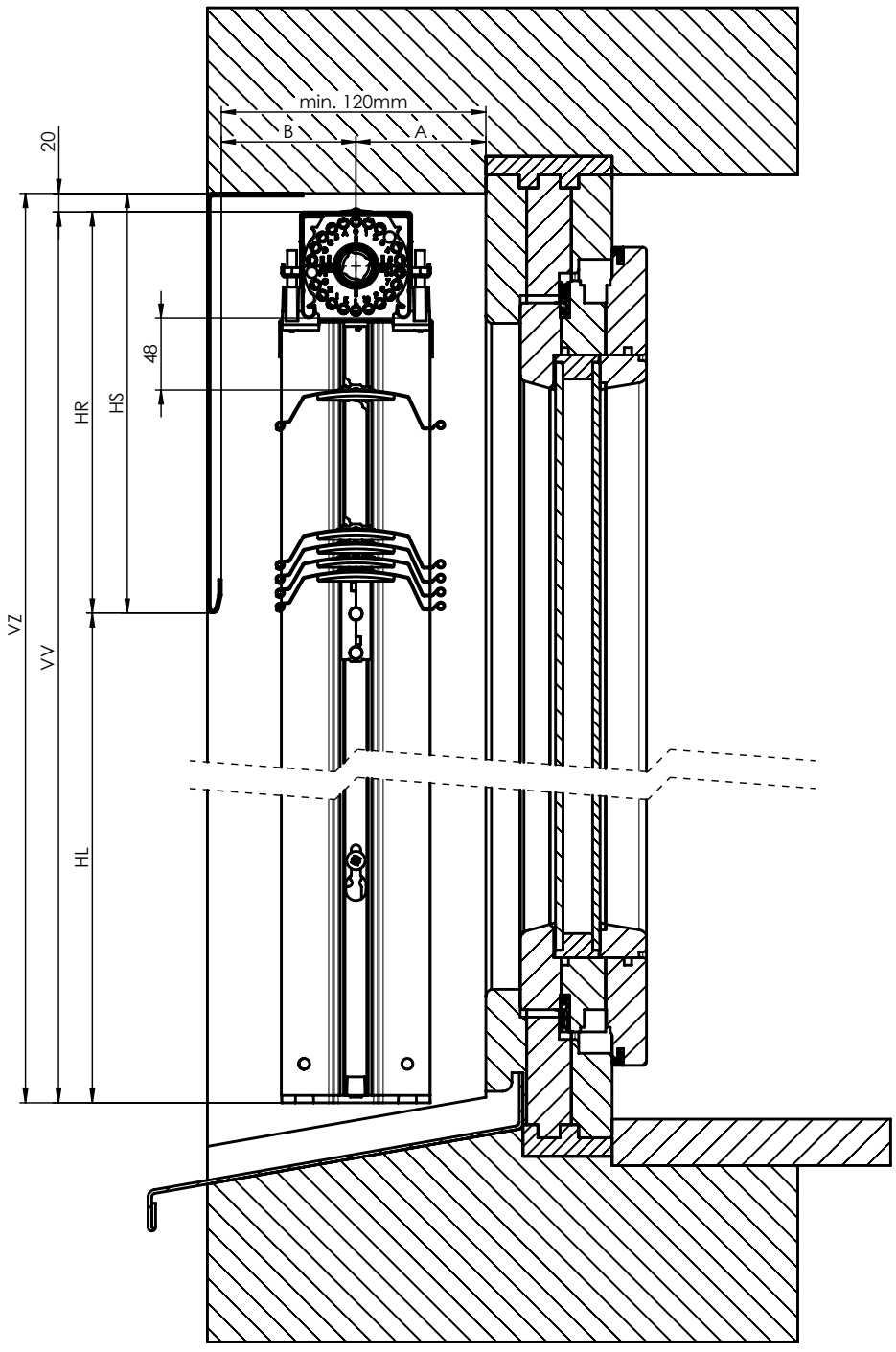

VERTICAL SECTION - TITAN 90 2-01825-0083-0

A* min. 65 mm
B min. 55 mm
A+B min.120 mm
* + possible addition because of protruding drip-moulding (ledge) or hinges.
Dimension of packet and passageway are approximate values and may differ in reality.
Dimension divergences can be +/-5mm.

VV –height of produced blind
VZ - blind height including assembly gap
HL –height of passageway by lifted bling
HR –height of packet without assembly gap
HS –height of packet with assembly gap

TITAN 90 EXTERIOR BLIND DIAGRAM

VERTICAL SECTION **MOTOR CONTROL**

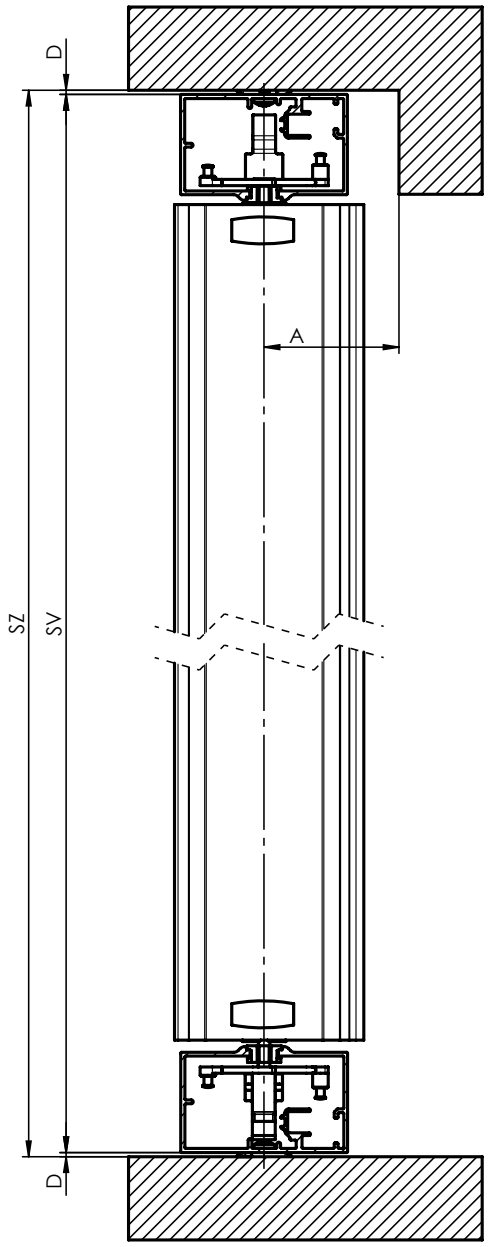

HORIZONTAL SECTION - TITAN 90 2-01825-0084-0

SZ - height of blind including brackets
VZ - blind height including assembly gap
D - the width of the guiding channel holder or the spacer washer

Slat

Slat 90 (6-012599-XXXX)

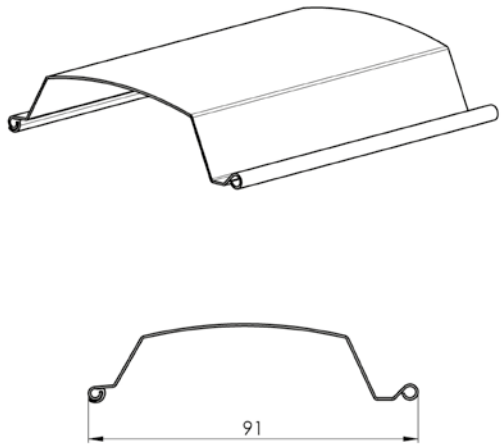

Last slat lumen

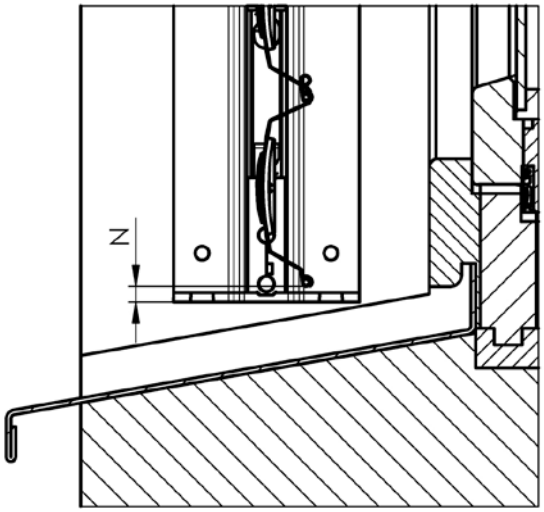

The gap between the bottom edge of the last slat and the end of the guiding rail N = 10 ± 5 mm

Guidance

Guiding channel P 018/81 (3-02881-XXXX)

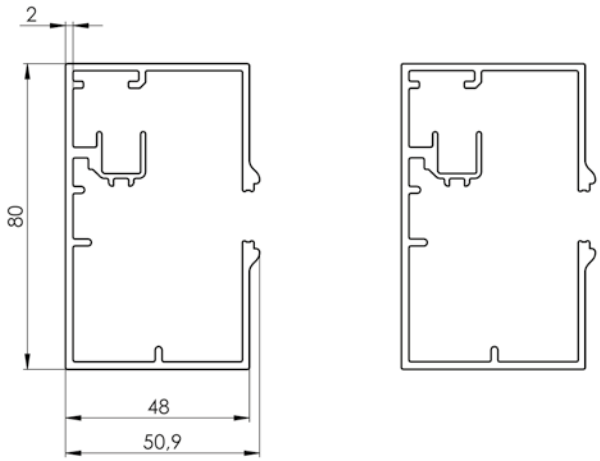

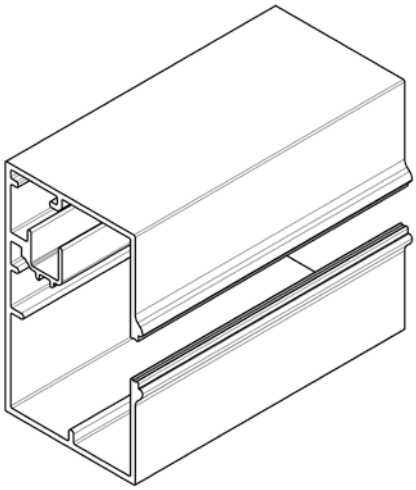

Underplaster guiding channel TITAN P 018/82
(3-03112-XXXX)

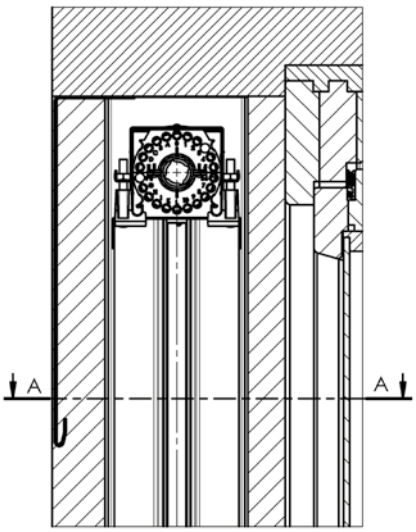

Titan with underplaster guiding channels - measurement
- measure the lining in three places
- add 2x50mm to the smallest dimension
- this is the manufacturing width of the blind

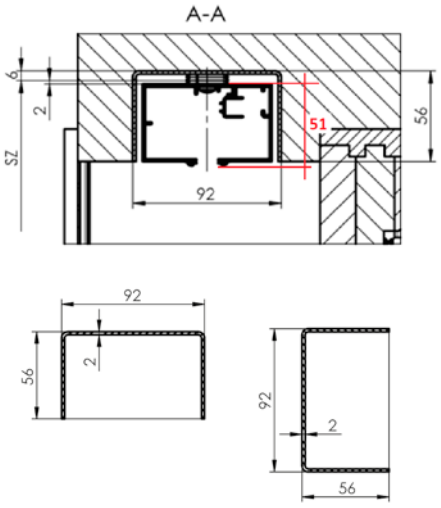

Assembly holes for guiding rails

Blind height = blind height including assembly gap (VZ)	Number of punching (PP)	Upper punching position (T)
400 - 799	2	225
800 - 1299	2	290
1300 - 1799	2	480
1800 - 2799	3	480
2800 -	4	570

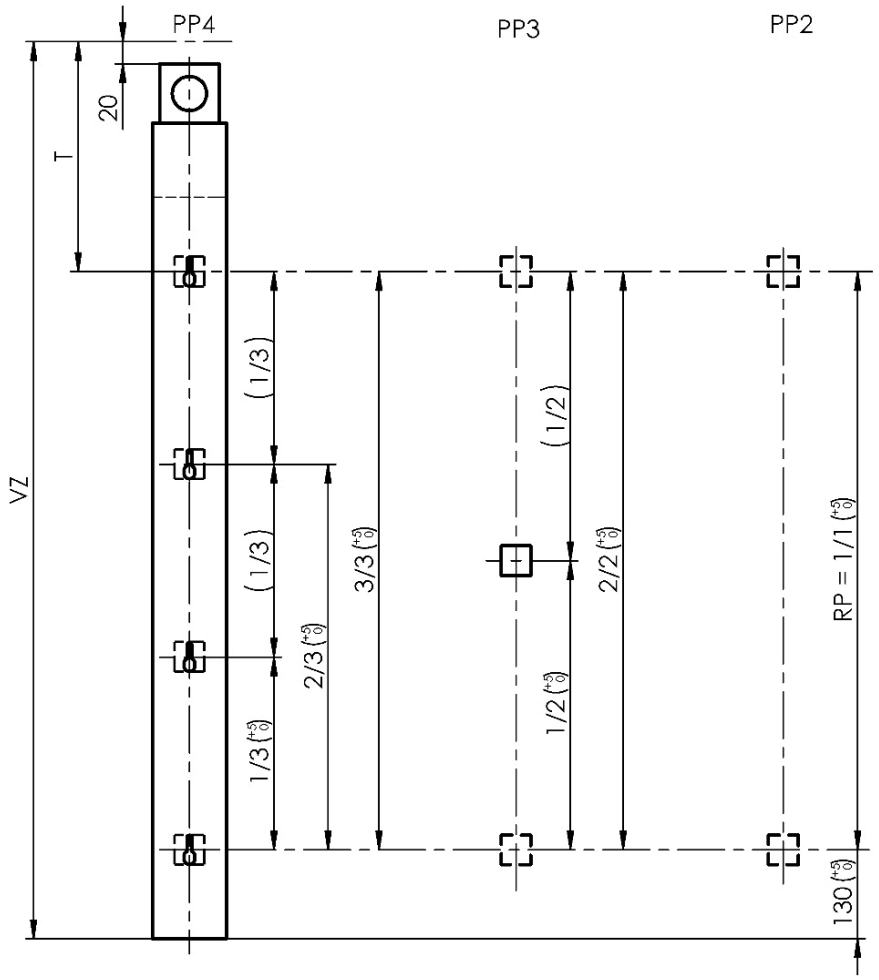

Fixing parts requirements

ø screw = 4,8 – 5 mm
ø screw head = max. 10 mm
screw head height = max. 4 mm

Fixing parts have to be strong enough and suitable for particular wall types.

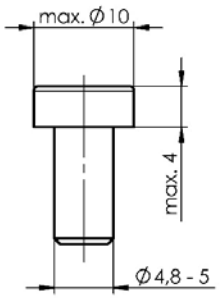

Installation

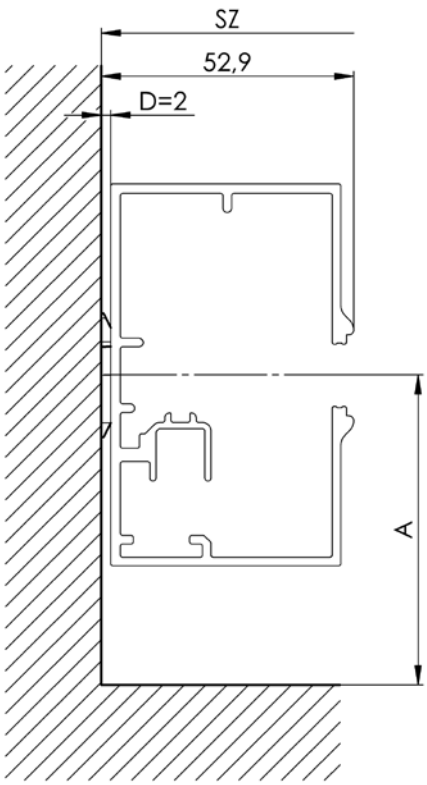

Spacing pad P 640
2-02670-XXXX-0

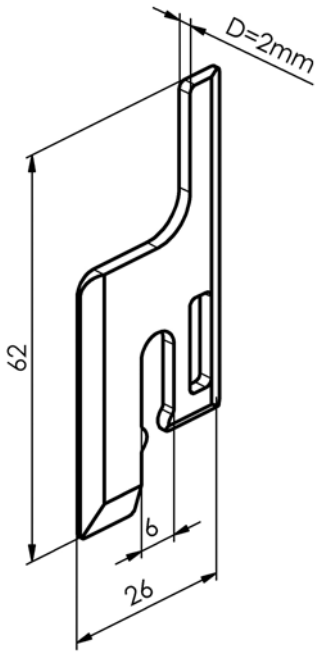

SZ - height of blind including brackets
A - distance guiding channel axis from window
D - the width of the guiding channel holder or the spacer washer

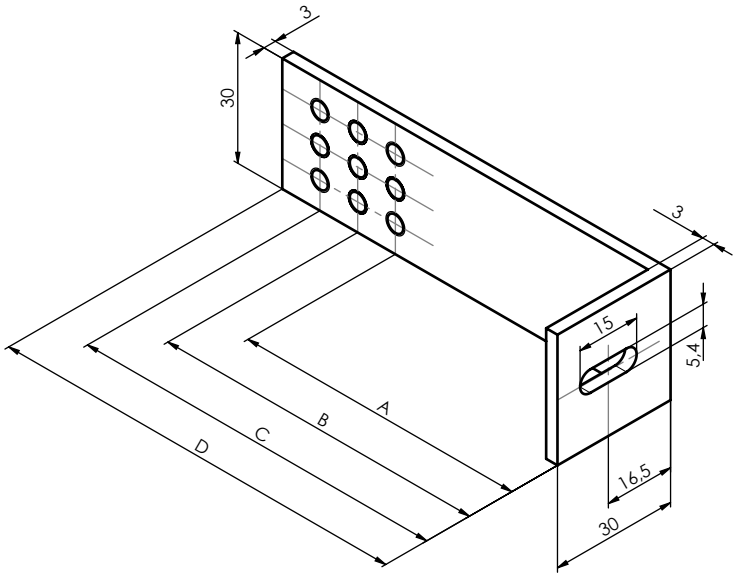

Guiding Channel Holders P 021/13-16 (3-03356-XXXX-0 - 3-03359-XXXX-0)

Itemname	Business name - Abbreviation 2	Order number - Abbreviation 1	A (mm)	B (mm)	C (mm)	D (mm)
Guiding Channel Holder L30-65,75,85	P 021/13	3-03356-XXXX-0	65	75	85	100
Guiding Channel Holder L30-70,80,90	P 021/14	3-03357-XXXX-0	70	80	90	100
Guiding Channel Holder L30-95,105,115	P 021/15	3-03358-XXXX-0	95	105	115	130
Guiding Channel Holder L30-100,110,120	P 021/16	3-03359-XXXX-0	100	110	120	130

MEASUREMENT

Measure the width (SZ) and drop (VZ) of the blind.

Measure the width (SZ) of the blind at least at three points, on the top, in the middle and on the bottom.
Use the lowest measured value for ordering and production of the blind.

ATTENTION! Produced width (SV) of the blind TITAN is always shorter compared to measured one according to chosen assembly option. See Attachment: Assembly options.

Measure the drop (VZ) of the blind at three points as well, on both sides of lining and in the middle. Use the lowest measured value for ordering and production of the blind.

ATTENTION! Produced drop (VV) of the blind TITAN is always 20mm shorter compared to the measured one (VZ). The reason is ensuring manipulation space for assembly process and space for fixing brackets for blind pelmet.
Please take this into consideration when specifying the cover sheet.

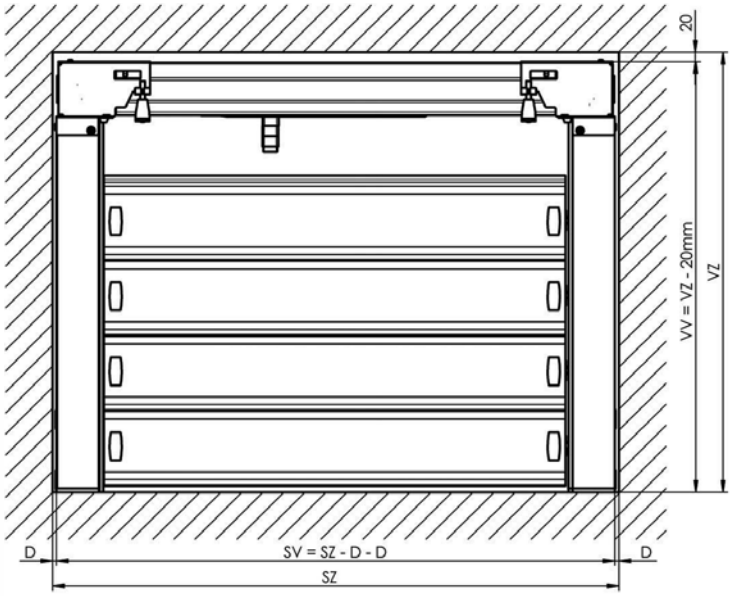

Note:
Real width of produced blind (SV) is always shorter compared to the one in order form. Width difference comes from the chosen assembly option. For assembly onto lining it is obligatory to use 2mm distance pads. The pads help to adjust vertical level of guiding rails.
Real drop of produced blind (VV) is always 20mm shorter than the one in order form. The reason is ensuring manipulation space for assembly process and space for fixing brackets for blind pelmet.
Minimal lining depth for correct assembly is approx. 120mm.

ATTENTION!
Take the utmost care during measurement; you will avoid possible problems during later assembly of the blind.

ASSEMBLY

Please read this instruction carefully before you start assembly process, follow all instructions step by step and pay attention to all recommendations stated hereinafter.
All information in this manual is very important for correct assembly process. Only well instructed person shall be able to complete the whole system of chain blind.

- Action
- Check
- ! - Attention

Assembly preparation
- Assembly sizes double check
Blind sizes must match the values stated in order form. Fitting tolerances must match values stated in technical manual.
- Double-check assembly hole and its preparation.
- Underlay check, chose the right fixing items and tools.
- Electric power preparation for motor connection.
- All assembly underlay check
  Check all assembly values (width x drop x packet height)

ATTENTION! All marks on blinds parts are always placed and visible from interior view!

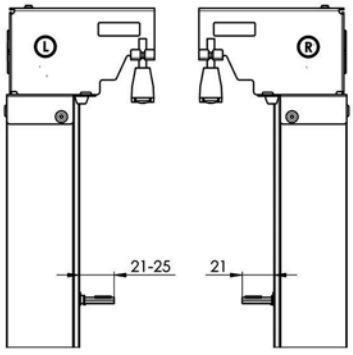

Difference Right/Left guiding rail
- Left guiding rail
- sticker „L" on bearing bracket from interior view
- variable distance of slat holder 21-25mm
- Right guiding rail
- sticker „R" on bearing bracket from interior view
- fixed distance of slat holder 21mm

Assembly

1. Guiding rails assembly
A – Level the rail into lining.
B – Minimal distance between guiding rail axis and the obstacle is 65mm.
C – Mind the difference between left and right guiding rail, place them correctly.
D – Make marks through the assembly holes for using suitable fixing elements.
E – Screw and insert fixing elements.

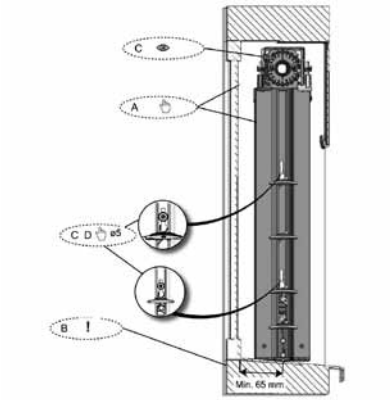

2. Guiding rails attachment
A – Ensure that you have not misplaced right and left rail.
B – Screw the screws through the guiding rail.
C – Before tightening put the distance pad on the screw between lining and the rail.
D – Tighten the screws and check the level of rails again. .

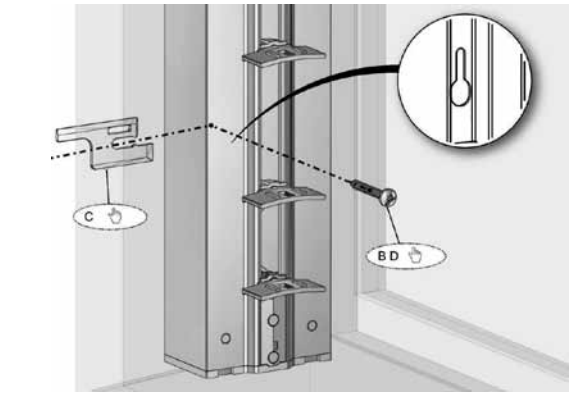

3. Check the bearing position
A – Do not turn the bearing in any case.
Default setting can be lost.
B – Ensure that bearing marking are facing down on both guiding rails.
C – Insert short connecting shafts into the bearings.

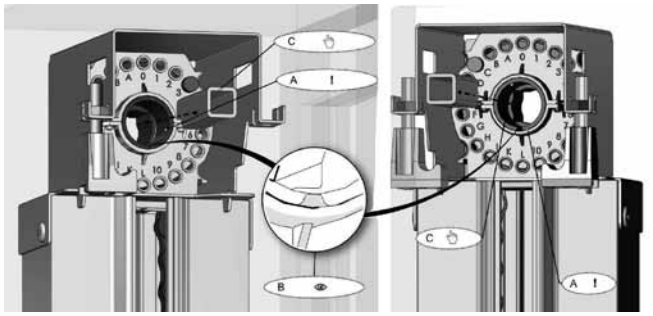

4. Head-rail with motor – preparation
A – Slide the connectors onto four-square shaft into the head-rail.
One from the left and one from the right side.
B – Screw heads are facing always down.

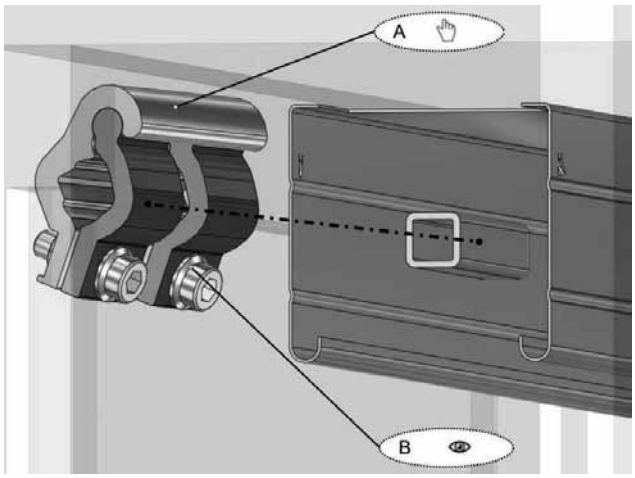

5. Head-rail with motor
A – Insert the head-rail from below onto both guiding rails and center it.
ATTENTION:
B – Make sure the "INTERIOR" label alwaysfaces the interior.
C – Secure the head-rail with securing hooks by tightening to guiding rails.

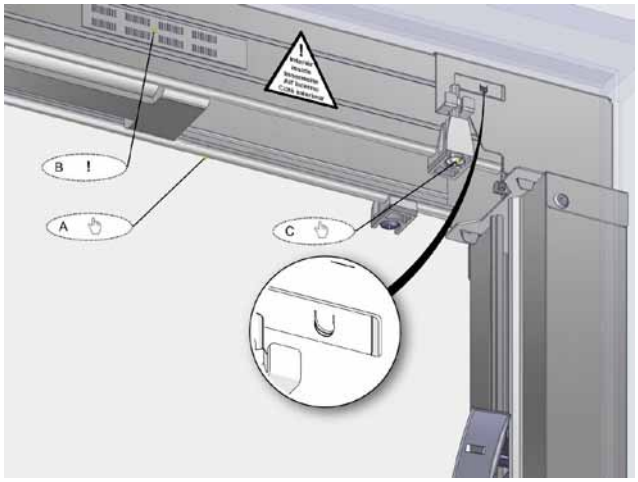

6. Head-rail with motor – shaft connection
A – Connect four-square shafts together with the connectors..
B – Ensure the gap between the shafts is approx. 5mm.
C – Tighten the connectors.

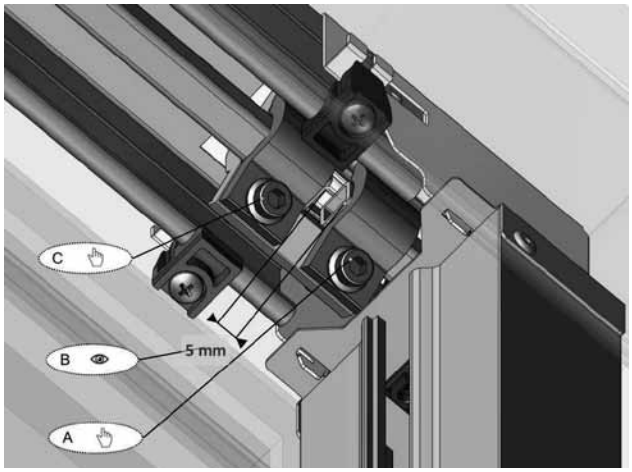

7. Motor connection
A – First equip the motor with suitable mechanical end stop button.
B – Connect the power supply (mounting) cable with motor cable.
C – If the head-rail is delivered with polystyrene support, remove it.

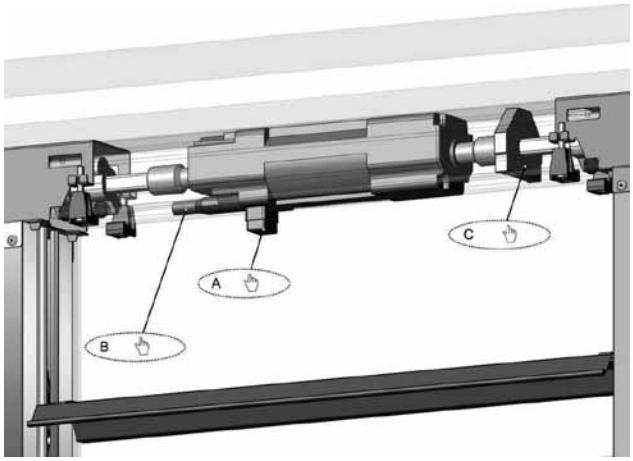

8. Slats
A – Unpack the slats (Avoid scratching!)
B – Hang the highest and lowest slat and secure them with stainless clips.
C – Seal rubber on the slat is facing always the exterior view.

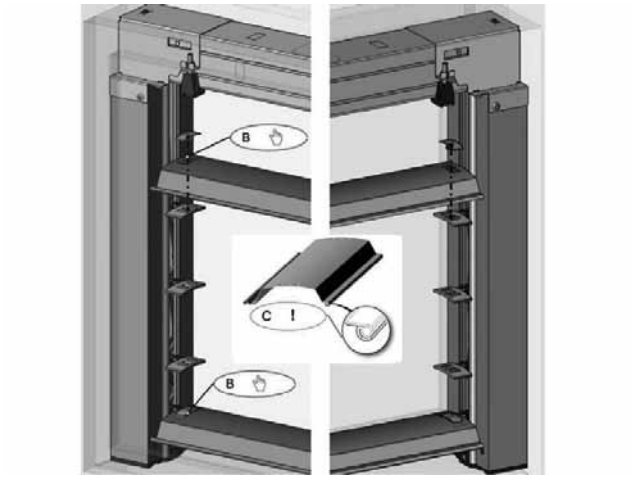

9. Slats - adjustment
A – Using the mounting cable move the blind up and down.
B – Moving the slats up push the upper limit button on the motor.
C – Both slats are in opened position. Check their parallelism.

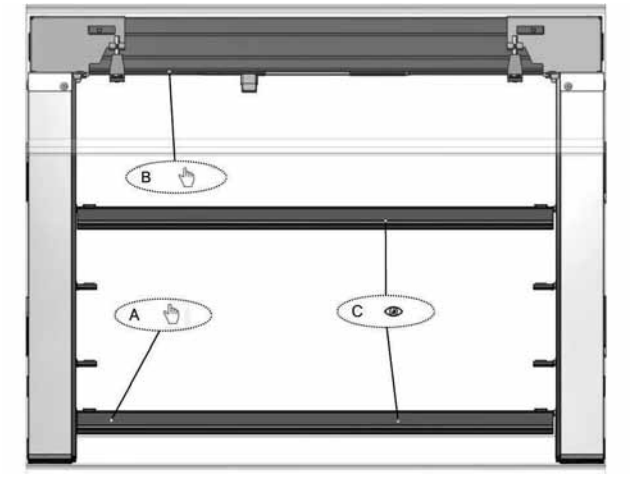

10. Slats - adjustment
A – When achieving the required upper end limit (usually height of lintel or pelmet) stop the slats movement.
B – Movement up is still possible for eventual setting.
C – By moving the slats downwards the upper end limit is saved.

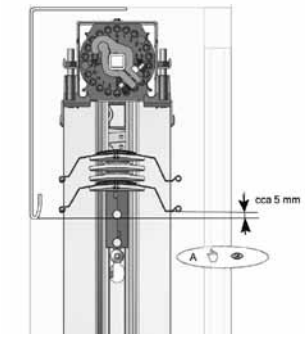

ATTENTION!
Do not change the lower end limit! This is factory default setting.
If the end stop is moved beyond the factory-set position, the tension in the blind mechanism will increase and the blind may be permanently damaged.

11. Motor connection
A – Connect power supply with the motor.
B – Use suitable plug according to motor control type.
C – Ensure that the cable does not decrease blind functionality.

12. Slats
A – Insert rest of slats and secure them with stainless clips.
B - Seal rubber on the slats is facing always the exterior view.

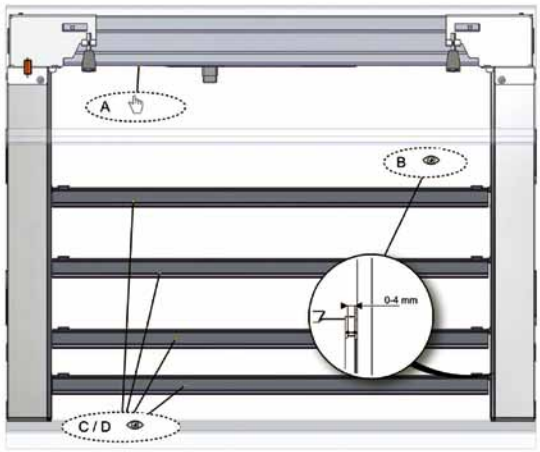

Functionality and motor drive check.

ATTENTION!
Never connect more than one motor with single control unit.

Functionality check:
A – Using the mounting cable move the blind several times up and down.
B – Check horizontal free motion of the slat side clips towards left guiding rail. Tolerance is 0-4mm.
C – Check vertical slat free motion. Tolerance is +/-1mm.
D – Slats have to be in parallel.

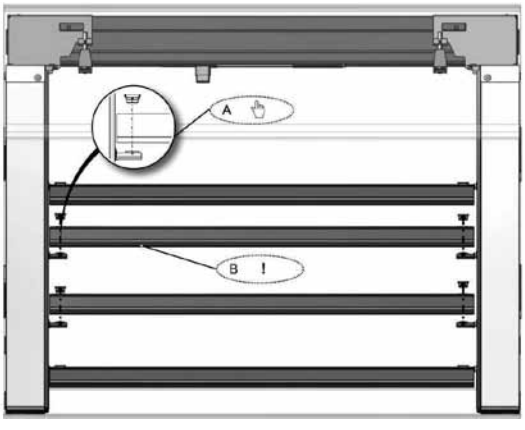

Sloped Blind Cetta 80F TE

Basic Product Specification

Always inverted
Al channel 58×60

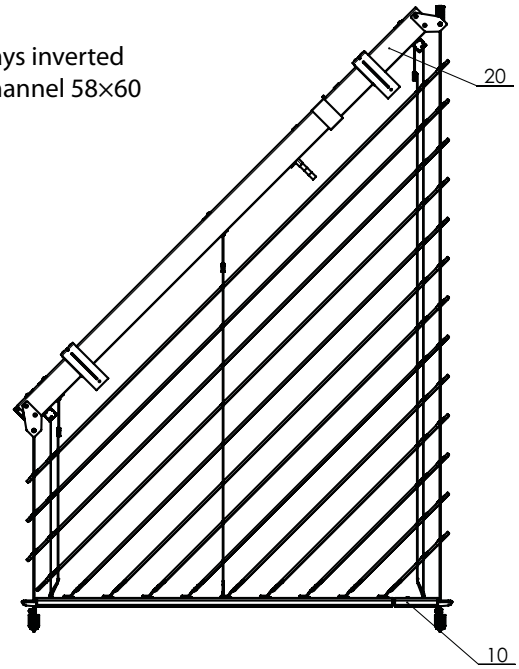

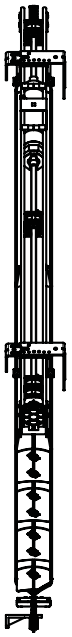

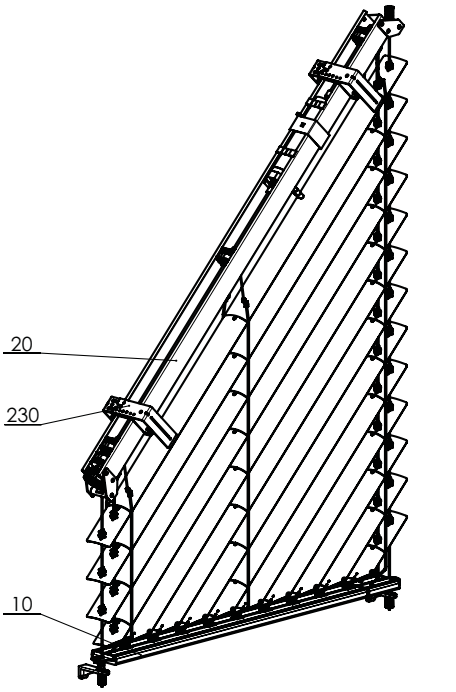

Sloped Exterior Blind 2-01077-XXXX-A



Specification

	Head Rail	Bottom Rail	Slat	Side Guidance Steel wire	Ladder	Textile Band	Assembly
Commercial Name **Dimension (mm)** **Material**	P 001/2 58x60 Al	P 012/6 + P 012/7 21x80	O 118 0,40 x 80 Al	P 036 ø 3,2 Fe/PVC	P 30/4 P30/5 P30/6 P30/7 104x85 74x85 93,5x85 83x85 PES	RHD 09 6mm PES	Variants of installation in Chapter "Assembly"
Color	Standard: natural (Al profil) Other RAL colors sprayed, DECORAL*	Standard: anodized aluminium Other RAL colors sprayed, DECORAL*	According to current ISOTRA a. s. scheme	According to current ISOTRA a. s. scheme	grey	grey	

*Maximum dimension 4000mm.

* We do not make atypical designs.

C80 FTE MANUFACTURING DIMENSIONS

min. width [mm]	max. width [mm]	min. height C [mm]	max. height V standard [mm]	max. producible height V [mm]	max. dimension B standard [mm]	max. producible dimension B [mm]	max. guaranteed area [m²]	max. angle of inclination of sloping part
600	2500	300	4000	4800	2700	3300	7	50 °

The dimension B influences the deflection of the lower telescopic bar when lifting the blind, and the deflection increases proportionately to this dimension. Therefore, starting from the value of 2701 mm of dimension B, it is necessary to sign a consenting declaration notifying of this deflection. Starting at the value of 3301 mm, the deflection may be so severe that that there is a risk of damage to the telescopic mechanism. In such a case, it is recommended to divide the blind into 2 telescopic sloped blinds.

Motors

Geiger, Geiger AIR, Somfy WT, Somfy IO, Elero

Sloped Blind Cetta 80F TE (2-01077-0000-A)

Position	Item name	Order number - Abbrevation 1
10	Low head rail - telescopic - for sloped blinds	2-01073-PU11
20	Upper head rail for sloped blinds	2-01074-PU11
230	Exterior blind holder	2-00649-0000

Measurement and Assembly

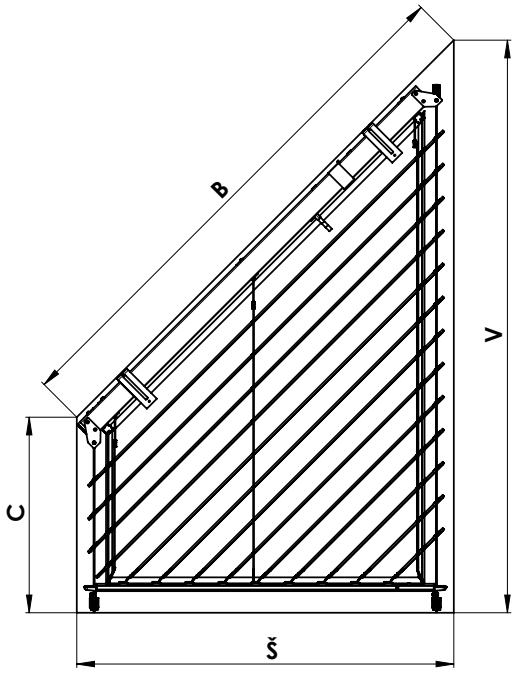

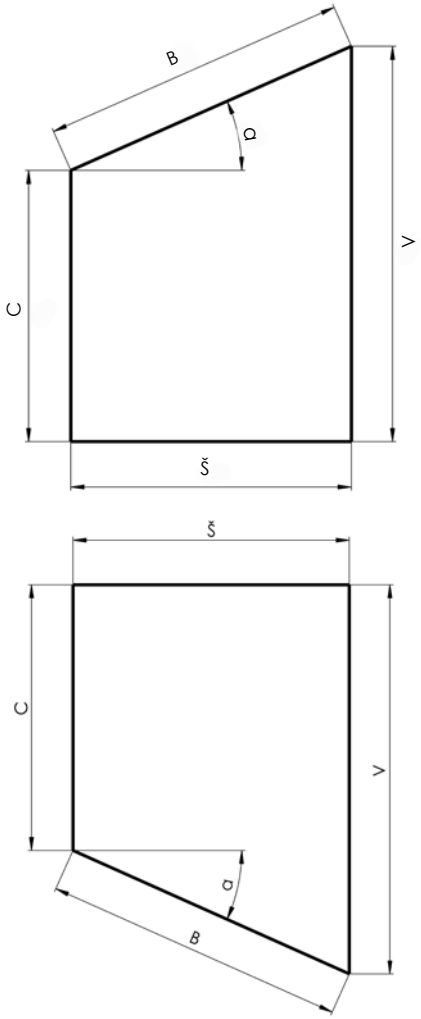

V - BIGGER HEIGHT
C - SMALLER HEIGHT
Š - WIDTH
B - HYPOTENUSE (CHECK DIMENSION)

Sloped Blind Cetta 80F TE Diagram

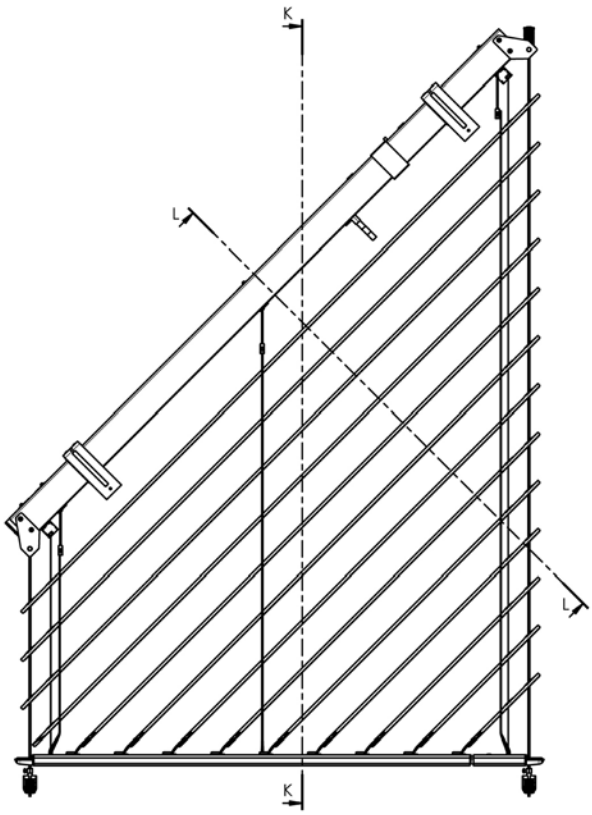

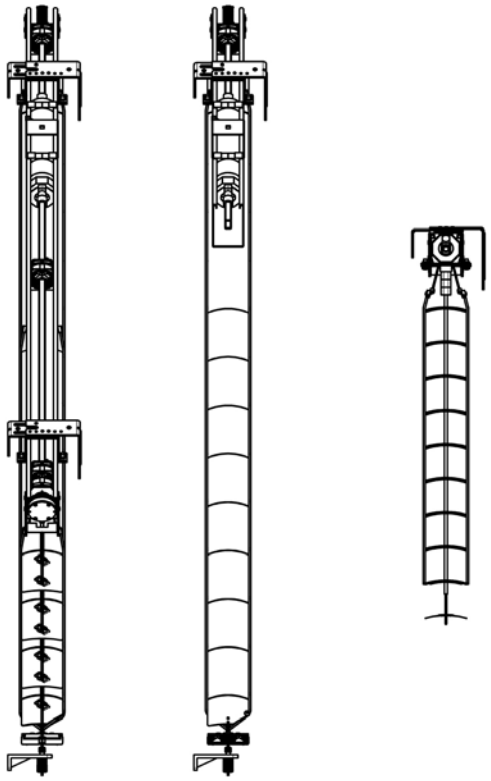

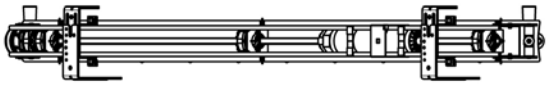

Blind diagram

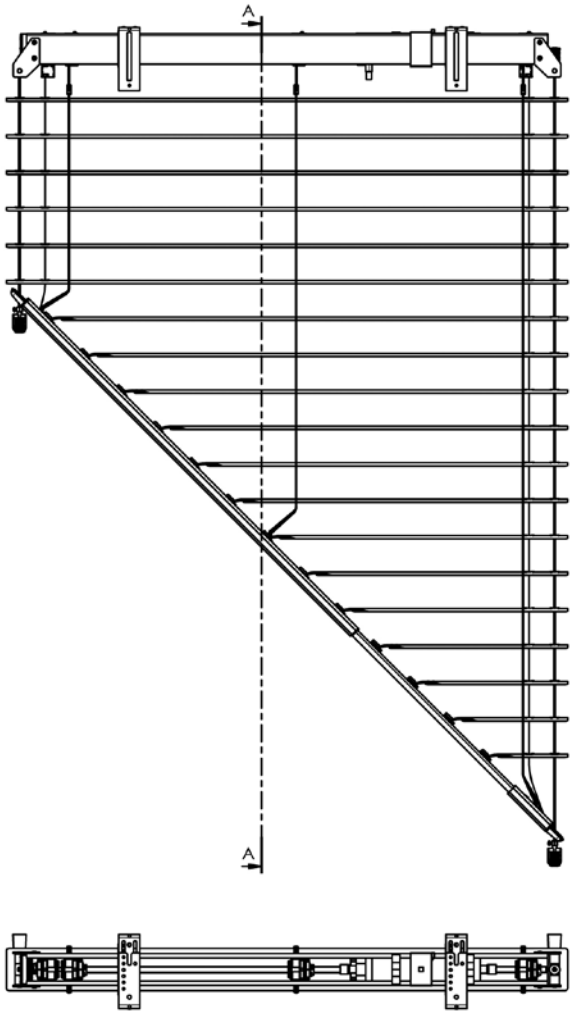

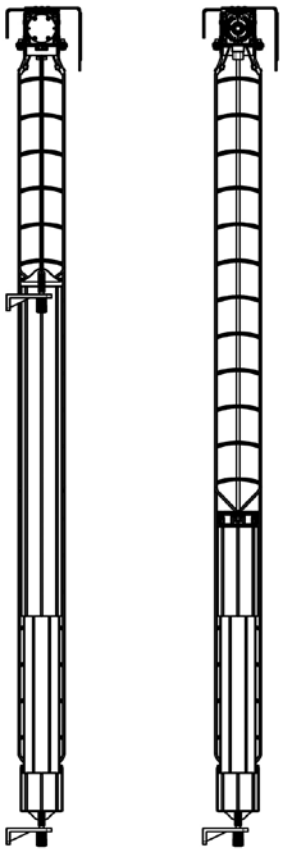

2-01177-XXXX-0

Bottom rail





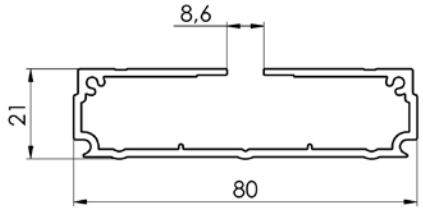

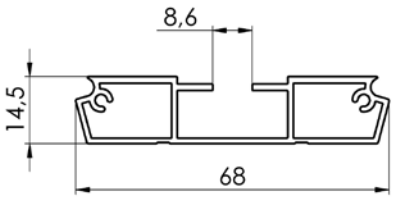

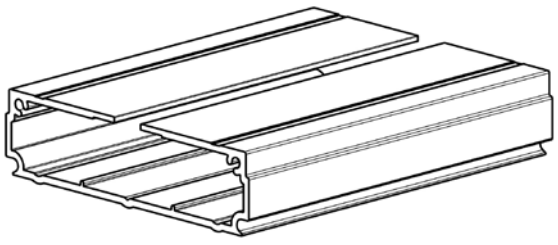

Exterior telescopic channel
3-02490-XXXX-0

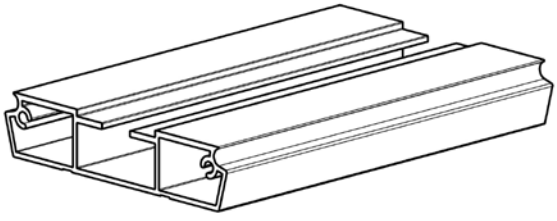

Interior telescopic channel
3-01491-XXXX-0

Control –motor (See page 81)

Design variants

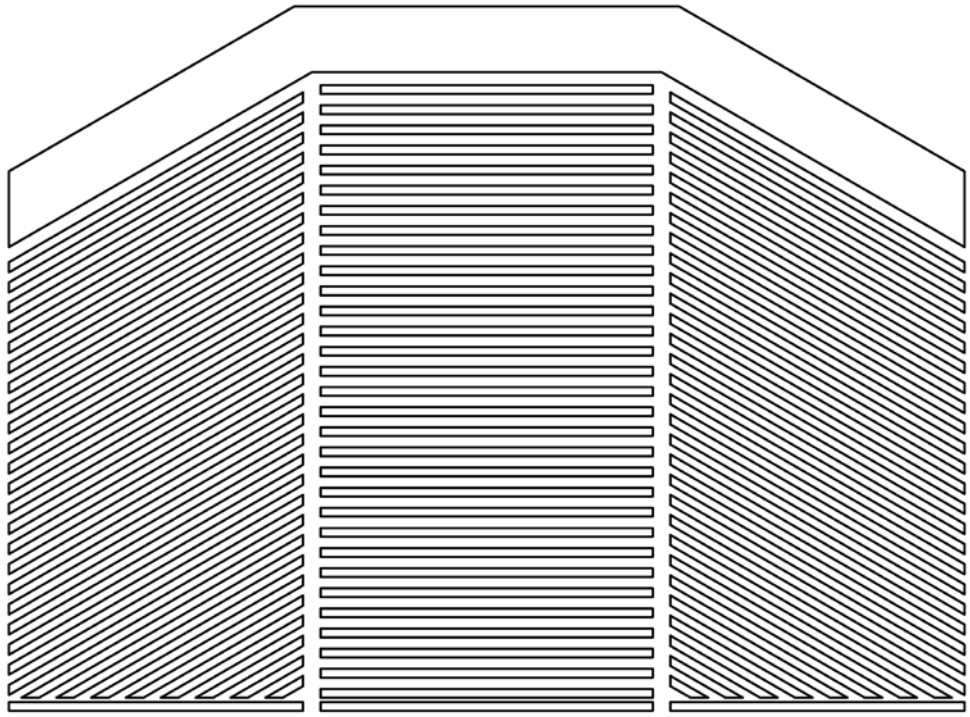

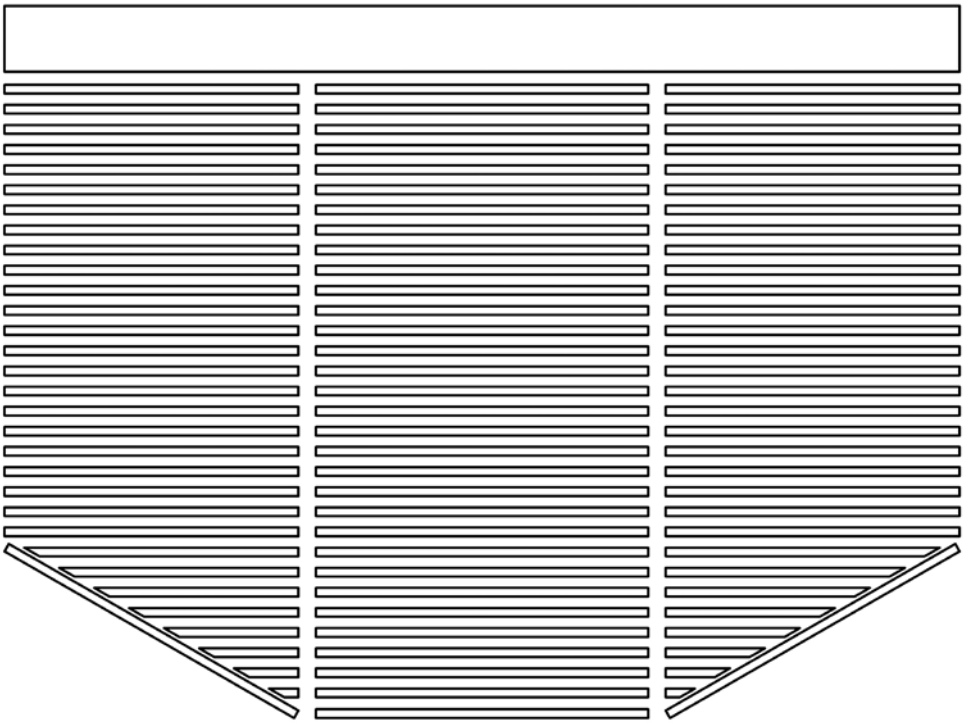

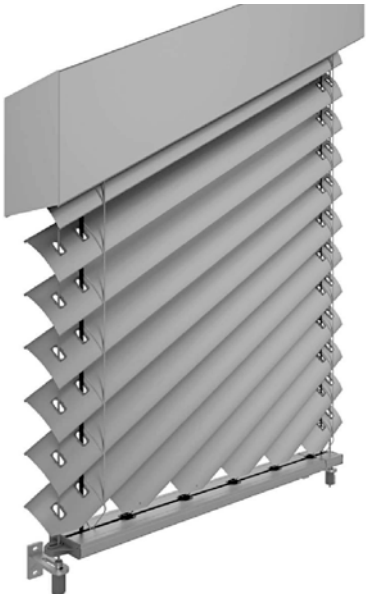

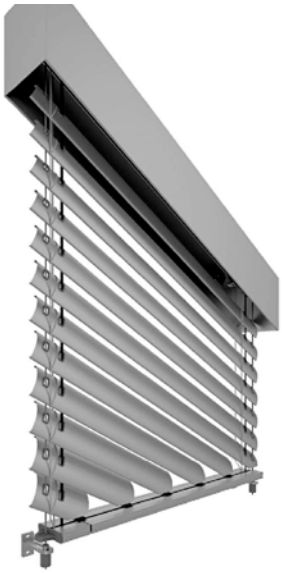

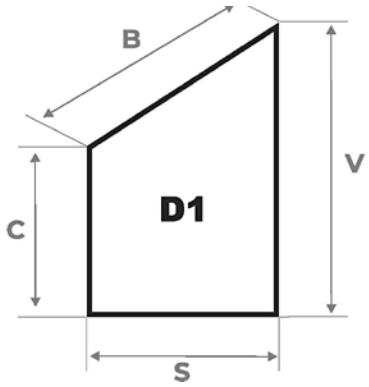
B
V
C
D1
S

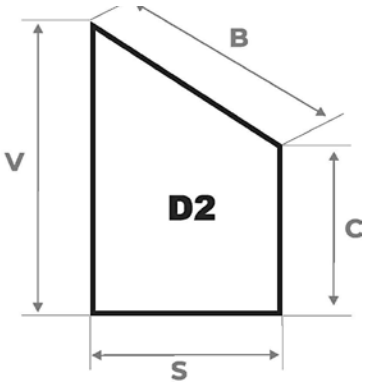
B
V
D2
C
S





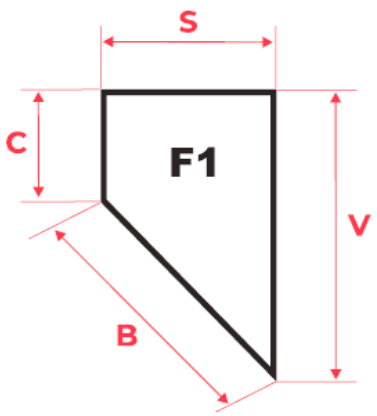
S
C
F1
V
B

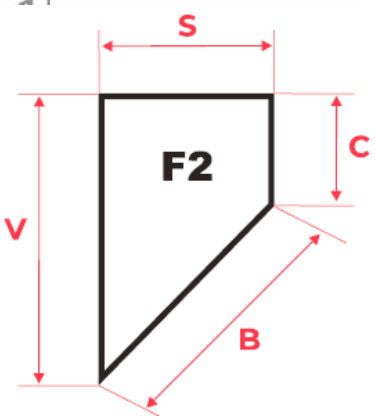
S
C
F2
V
B



Minimum gap 30 mm

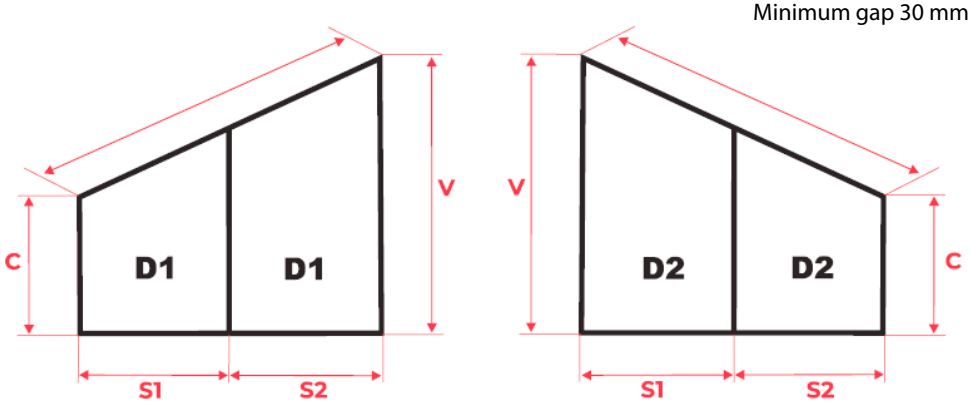

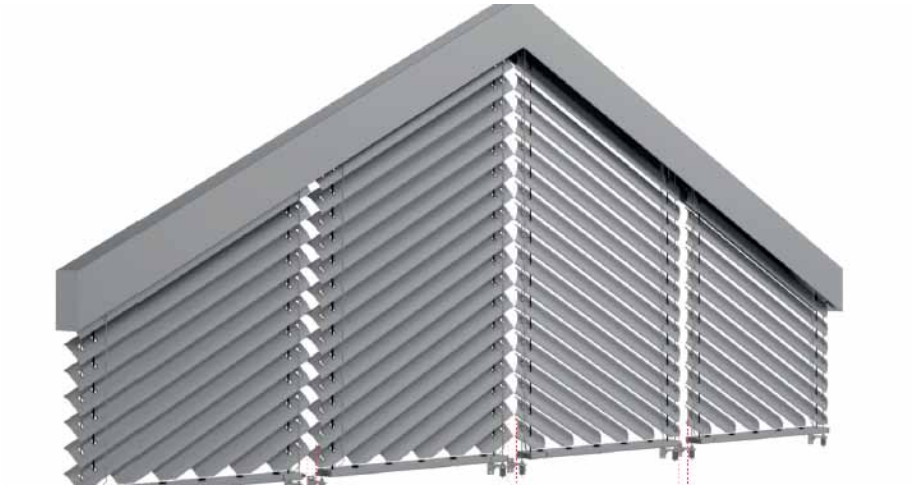

minimum gap 30mm minimum gap 50mm minimum gap 30mm

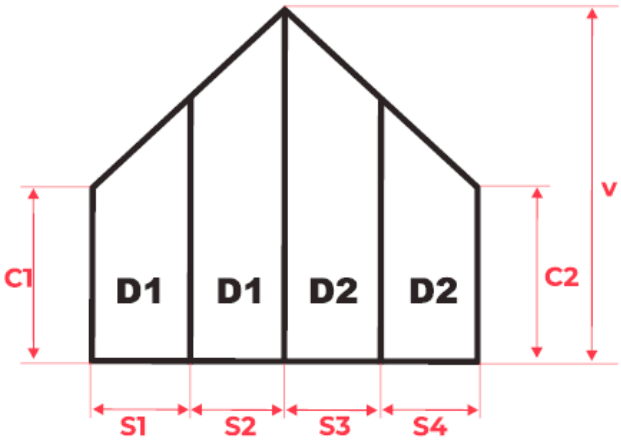



minimum gap 50mm

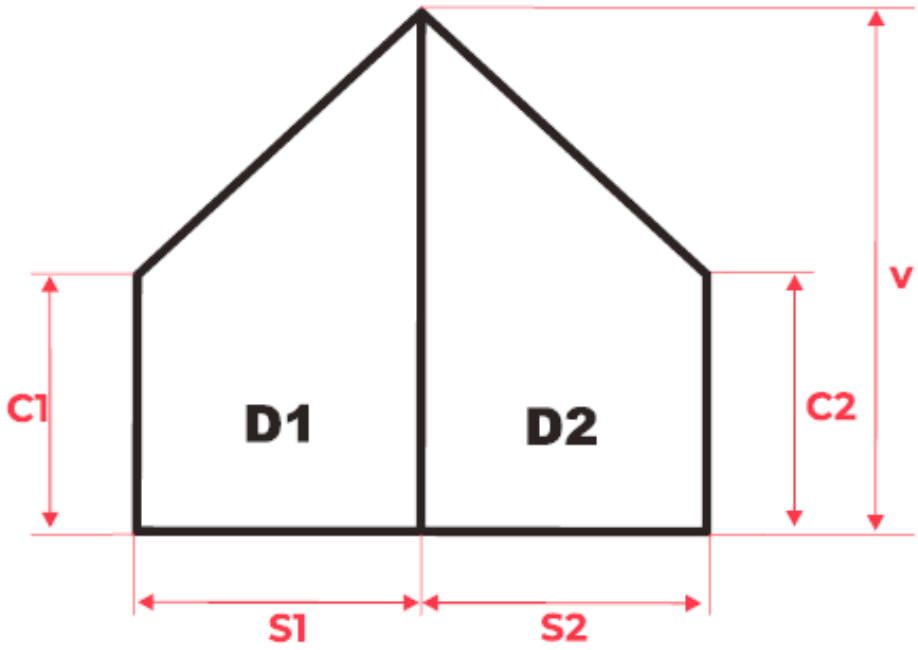

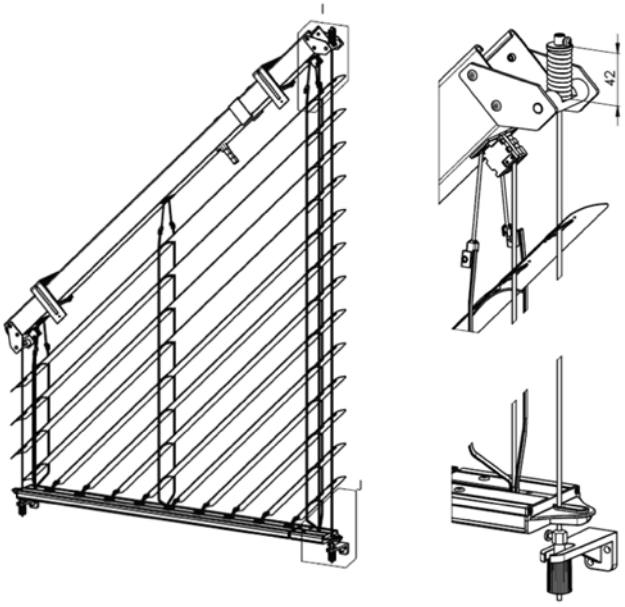

Sloped blind – wire tensioning

Using sloped blinds it is necessary to achieve correct wire tension to avoid its big undesirable sag while retracting the blind.
Shorter side does not need non-standard tensioning – this is made by common tensioning mechanism. Wire tension strength is approx. 100 N (10Kg).

On the other hand the longer side is equipped with special spring mechanism in upper part. In the lower part you will find standard wire tensioner without spring. With this you will achieve requested strength approx. 300 N (30Kg).

The correct tension can be measured on upper spring where its length including pressed ring shall be around 42mm (see picture).

Following the above steps you will achieve correct tension for smooth run of sloped blinds.

Prevention of unintended movement of the top profile

Due to the interaction of factors such as manufacturing tolerances of the clamps and the top profile, coating, and the angle of inclination, unintended movement of the top profile in the holders may occur. To prevent this movement, we recommend fastening a self-drilling screw ST4.8x16 A2 DIN 7504N (6-018279-0000) through the clamp into the profile.

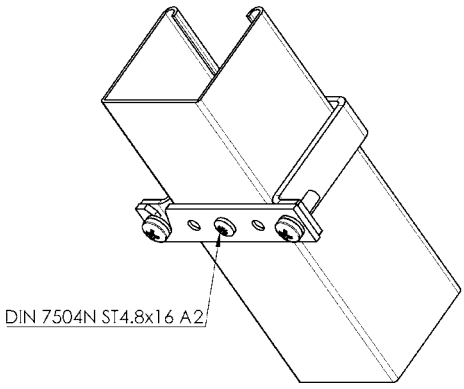

Adjusting the length of the slats

To ensure smooth operation of the telescopic blind and correct folding of the package when pulling it out, it is sometimes necessary to shorten the cut slats more. As a result of this shortening, the shortest slat in a sharp corner may have a limited tilting range. This phenomenon is due to the mechanical limits of the structure and does not affect the overall functionality and service life of the shading element.

Corner exterior blind

Basic specification

This exterior blind in a coupled version is ideal for corner installations of various buildings. The slats are connected by a stainless chain in a plastic guide. The lower rail profiles are connected using a metallic corner piece inserted in a plastic corner piece. The corner blind can be used for both outside and inside corners, but only for the 90-degree angle! The blind may only be operated by the motor in the larger of the two blinds (driving blind). The motor must be positioned toward the corner in the upper channel. The sum of surface areas of both blinds must not exceed the allowed torque of the motor used. The non-corner sides of the blinds may only be guided in guide rails. The corner blind uses the standard version of the lower rail (non-perpendicular version). The lower rail cannot be tilted it always remains open - horizontal.

Available for the following slats:

- Cetta 80 Flexi
- Zetta 90
- Cetta 80

Blind dimensions

Corner blind	Width		Heights		Total guaranteed area (m^2)
	min.	max.	min.	max.	max.
without motor	600	3000	500	4000	7,5
with motor	600	3000	500	4000	12

The movement of the blinds in the CORNER product is not synchronous. The reason is the mounting clearance in the shaft laying and in the gearbox.
This is a natural phenomenon that is not a reason for any complaint.

For technical reasons, the **CORNER blind** has a **20 mm longer textile strip** than standard exterior blinds.
When closed, the **CORNER bottom rail** will therefore have lower position than that of a regular blind, and when installed next to each other, they may not match exactly in appearance.
If the **CORNER** is installed next to any standard exterior blind, we recommend that you choose a **non-perpendicular bottom rail** for better visual match.
When choosing a **perpendicular** bottom rail variant, the **distribution of slats over the entire height** may also differ.

Inside corner

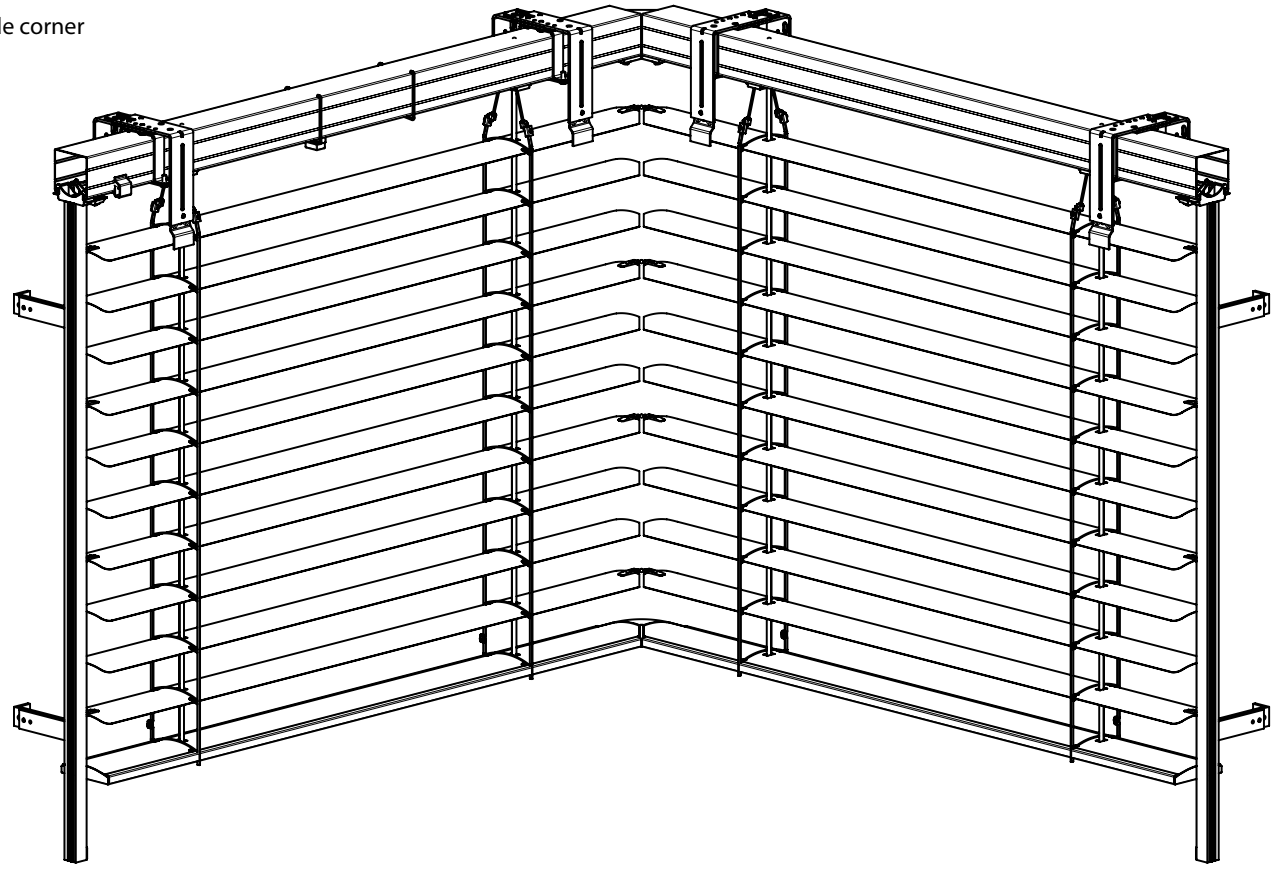

INSIDE CORNER (CETTA 80F)

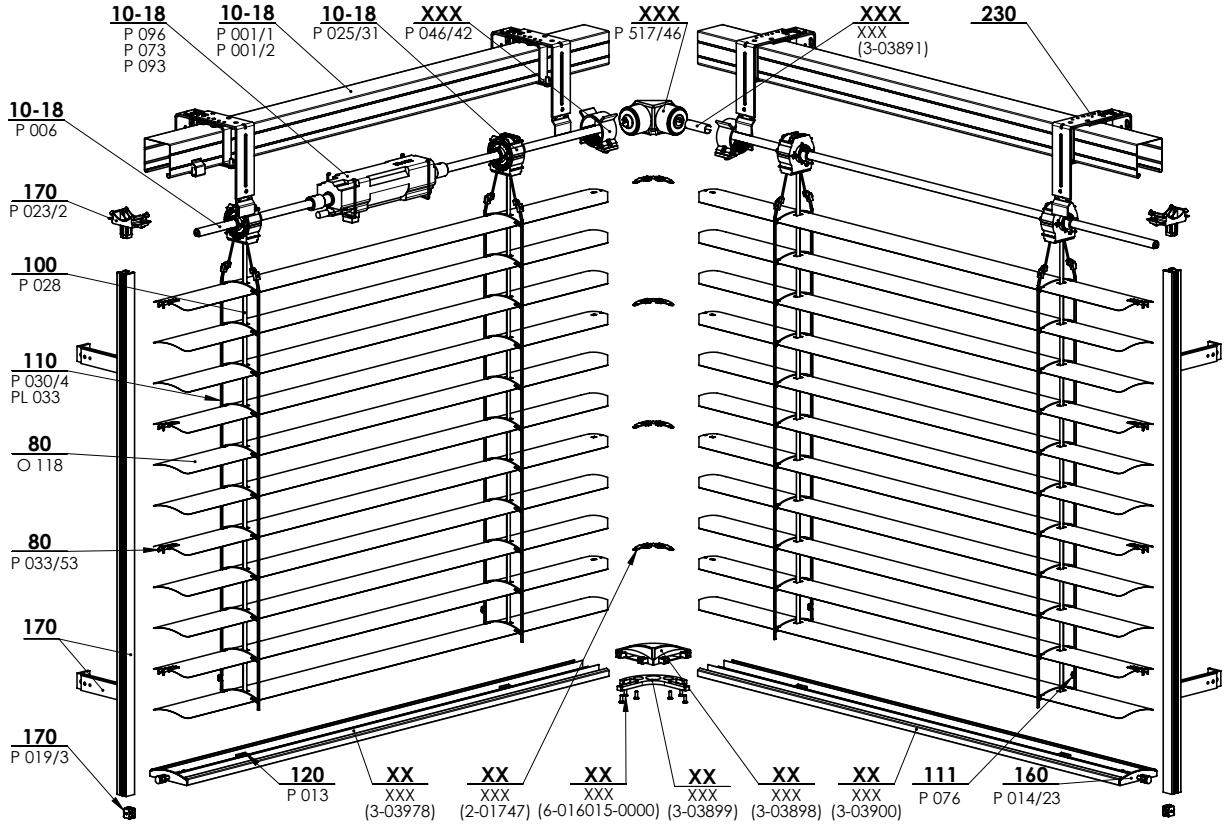

2-01746-xxxx: Cetta 80 Flexi INSIDE CORNER

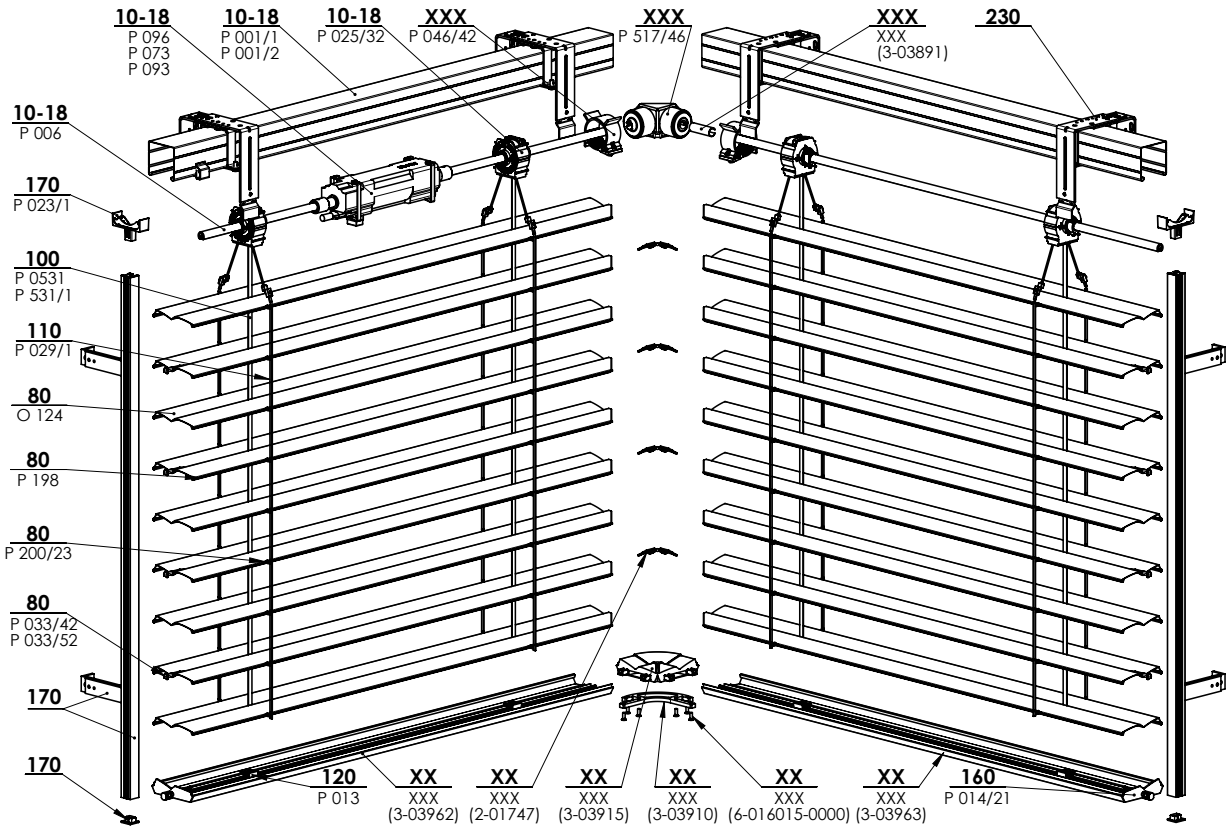

2-01775-xxxx: Zetta 90 INSIDE CORNER

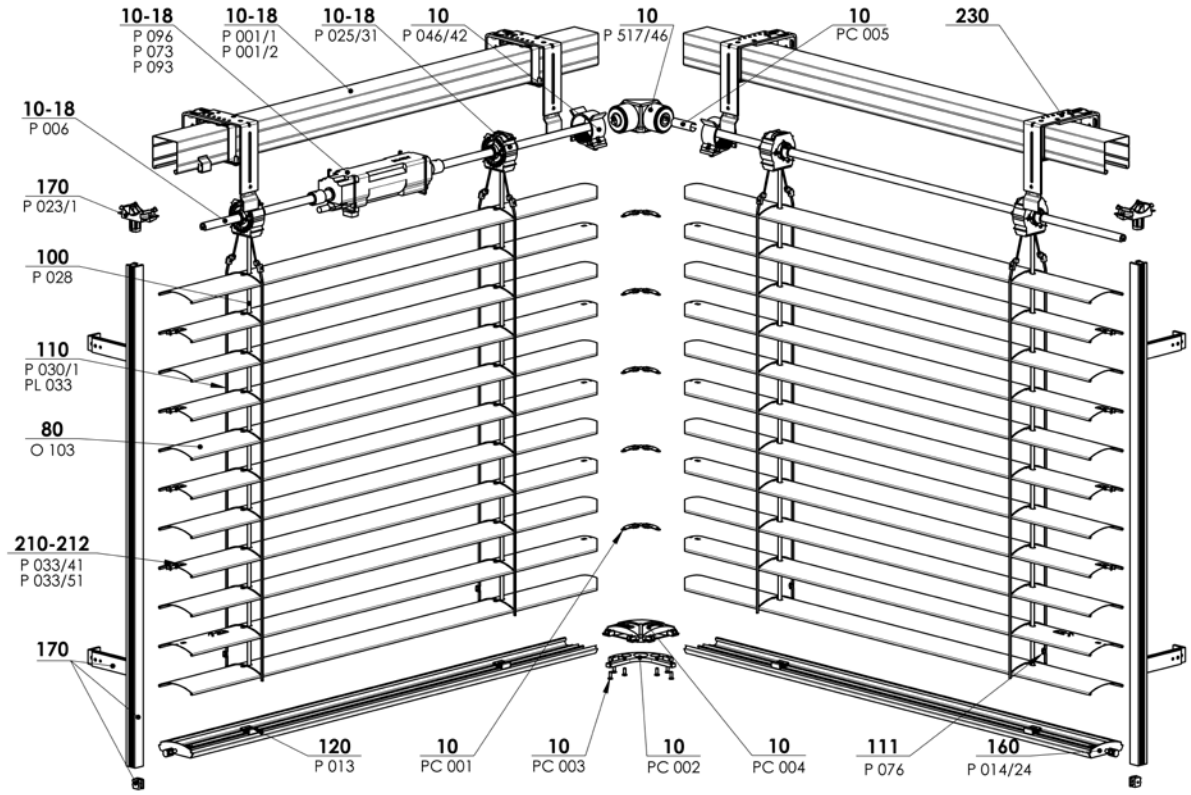

2-01865-xxxx Cetta 80 INSIDE CORNER

Detail of the connection of upper channels

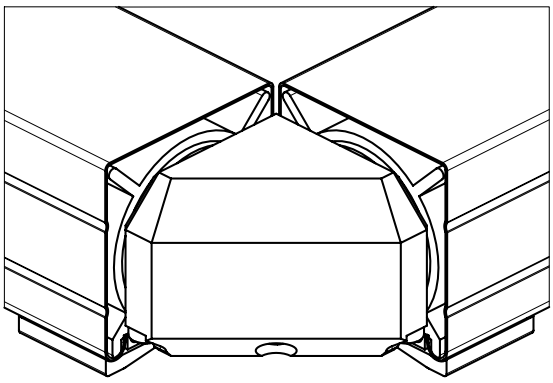

Detail of the connection of slats and corner lower rails

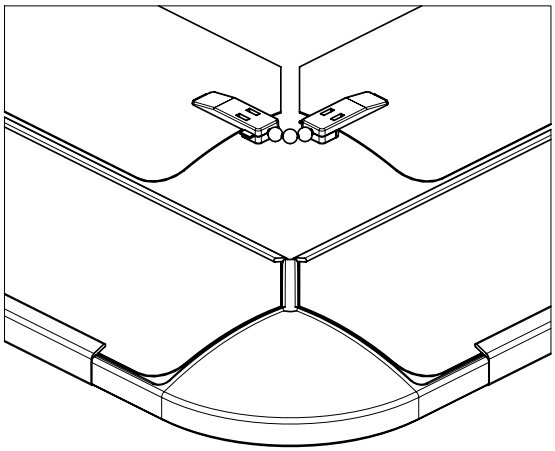

Outside corner

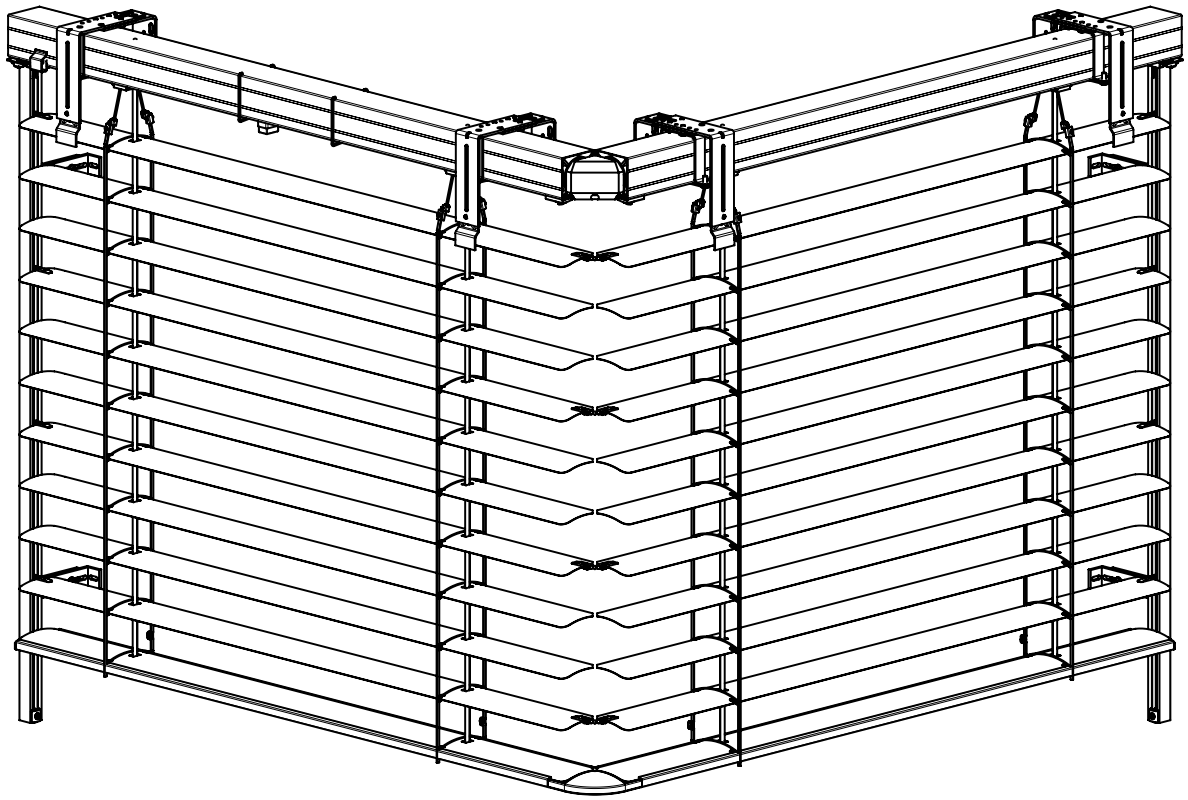

OUTSIDE CORNER (CETTA 80F)

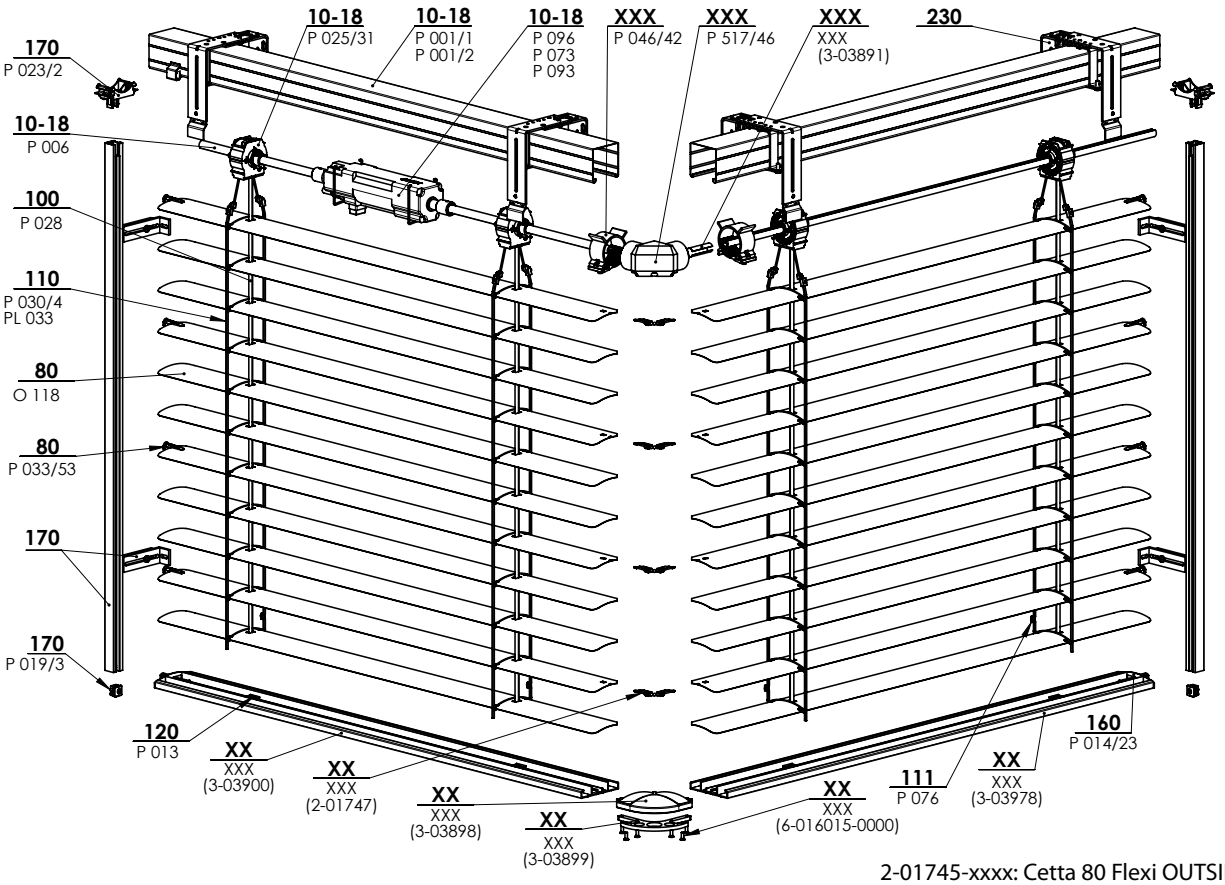

2-01745-xxxx: Cetta 80 Flexi OUTSIDE CORNER

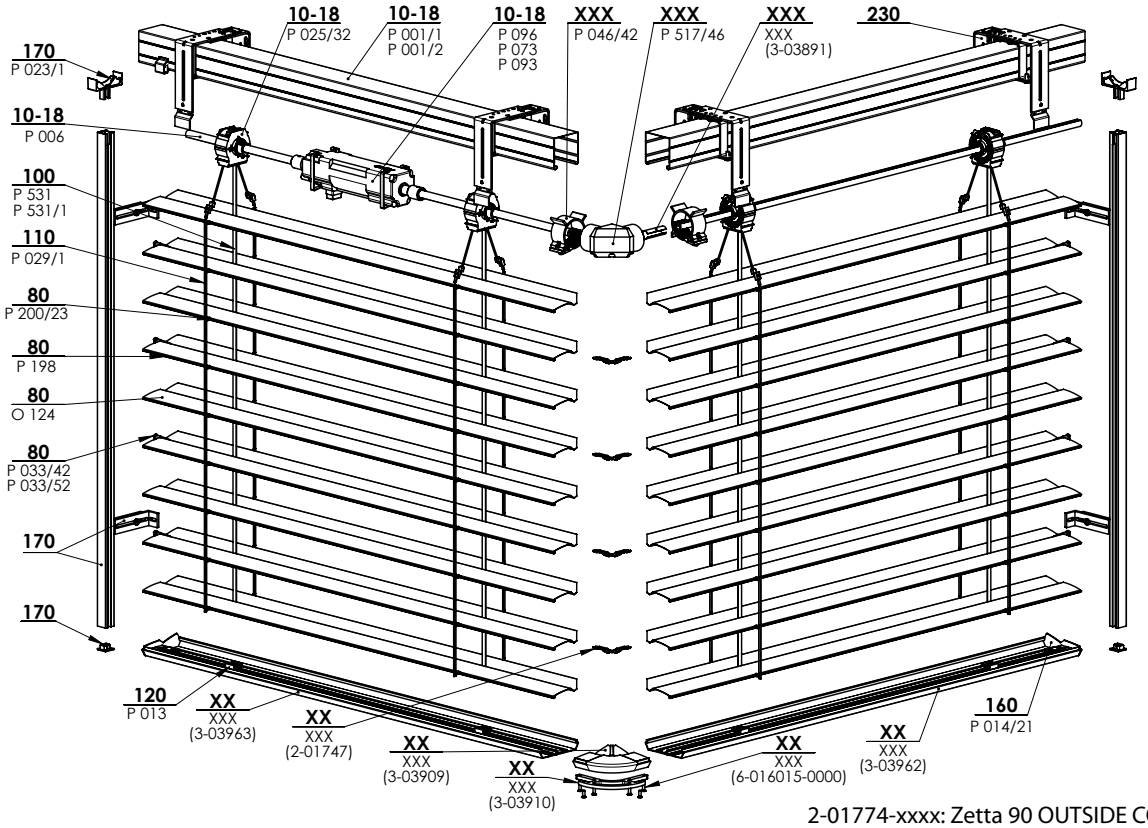

2-01774-xxxx: Zetta 90 OUTSIDE CORNER

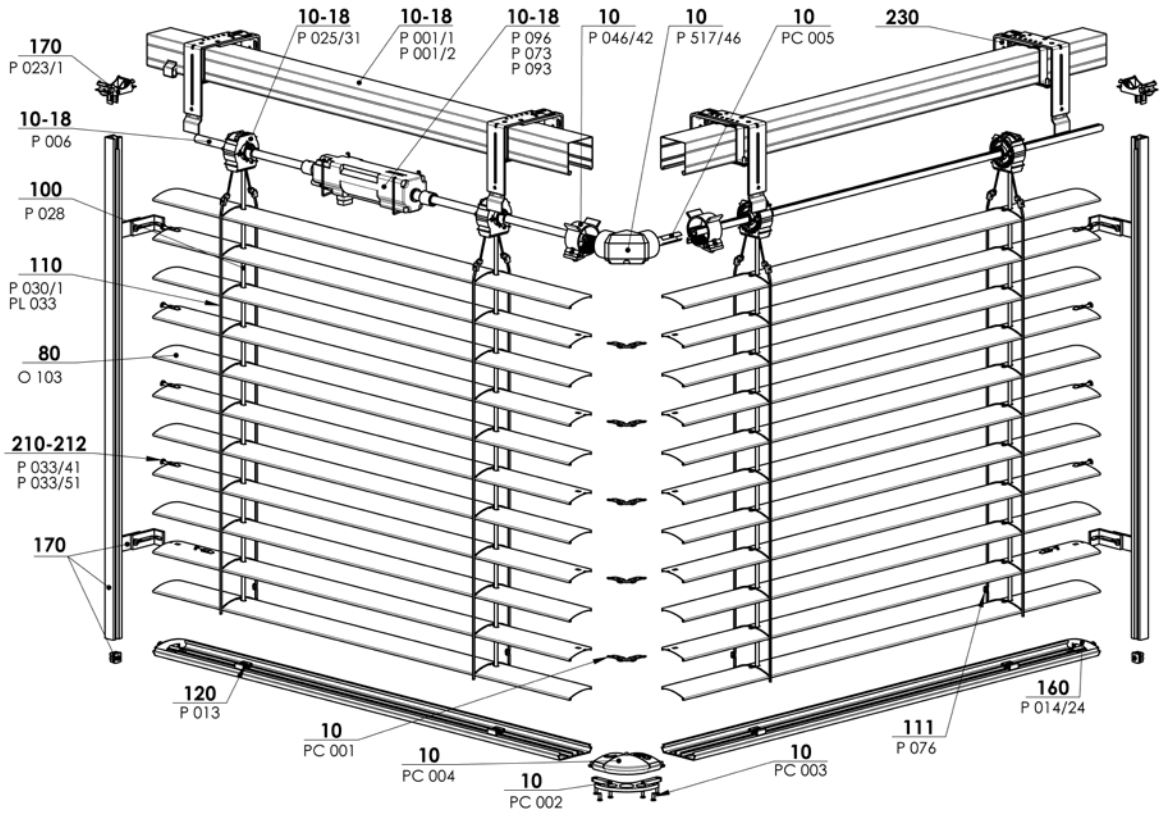

2-01865-xxxx Cetta 80 OUTSIDE CORNER

Detail of the connection of upper channels

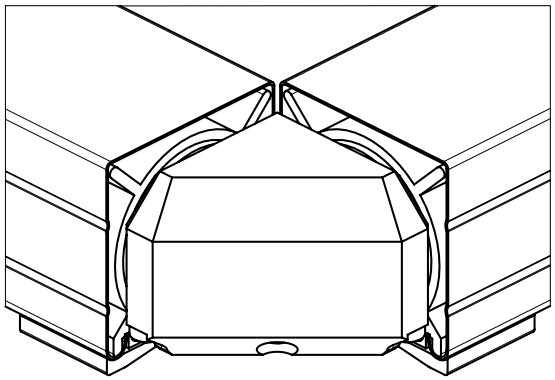

Detail of the connection of slats and corner lower rails

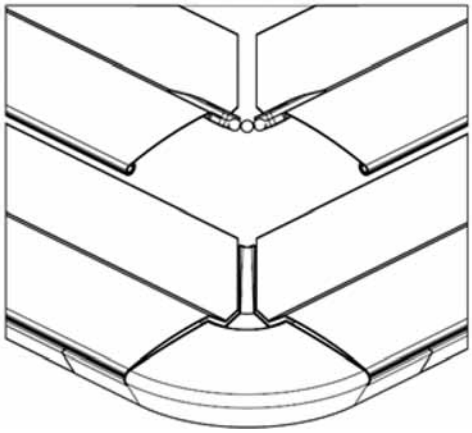

Facade Exterior Blinds

The exterior blinds for facades are installed directly to the building facade in front of the window opening.
This version is suitable for Cetta 80 and Zetta 90 blinds.
The slats move in round guiding channels, equipped with rubber sealing for silent movement of the blinds.
Controls: pulling the blind up and down and rotating the slats by motor only.
The standard box size is 240 mm, 332 mm a 392 mm.
Box, guide and bottom rails possible in DECORAL and RAL version.

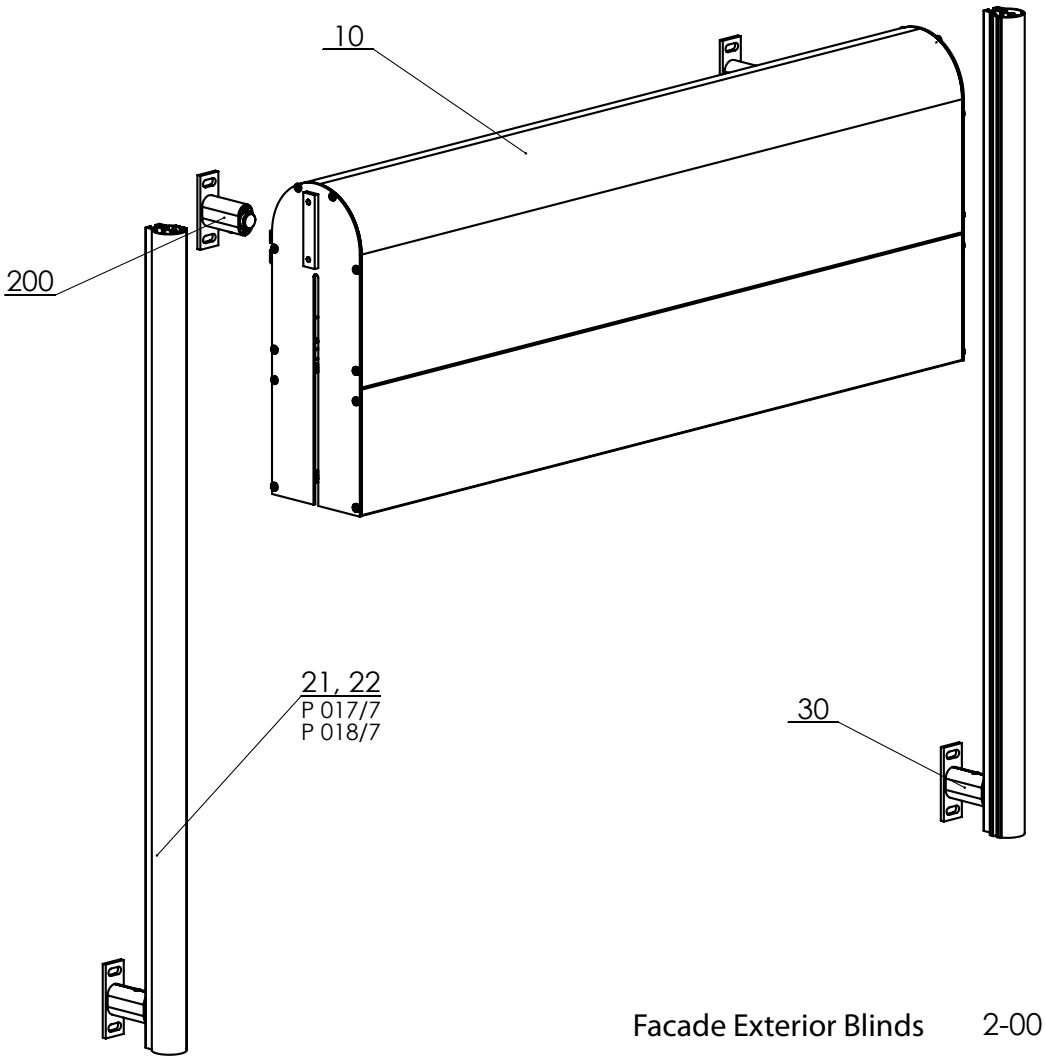

Facade Exterior Blinds 2-00108-XXXX-B

Dimensions of Blinds

Min. width	Max. width	Min. Height	Min. Height	Max. guaranteed area
800	4000	800	4000	16 m^2

Front covers based on blind height (mm)

Box	Cetta 80 (Height)	Zetta 90 (Height)	Cetta 80 Flexi (Height)
Box 240	< 1600	< 2100	< 3600
Box 332	< 3000	< 3700	< 4000
Box 392	< 4000	< 4000	

Set clipboar

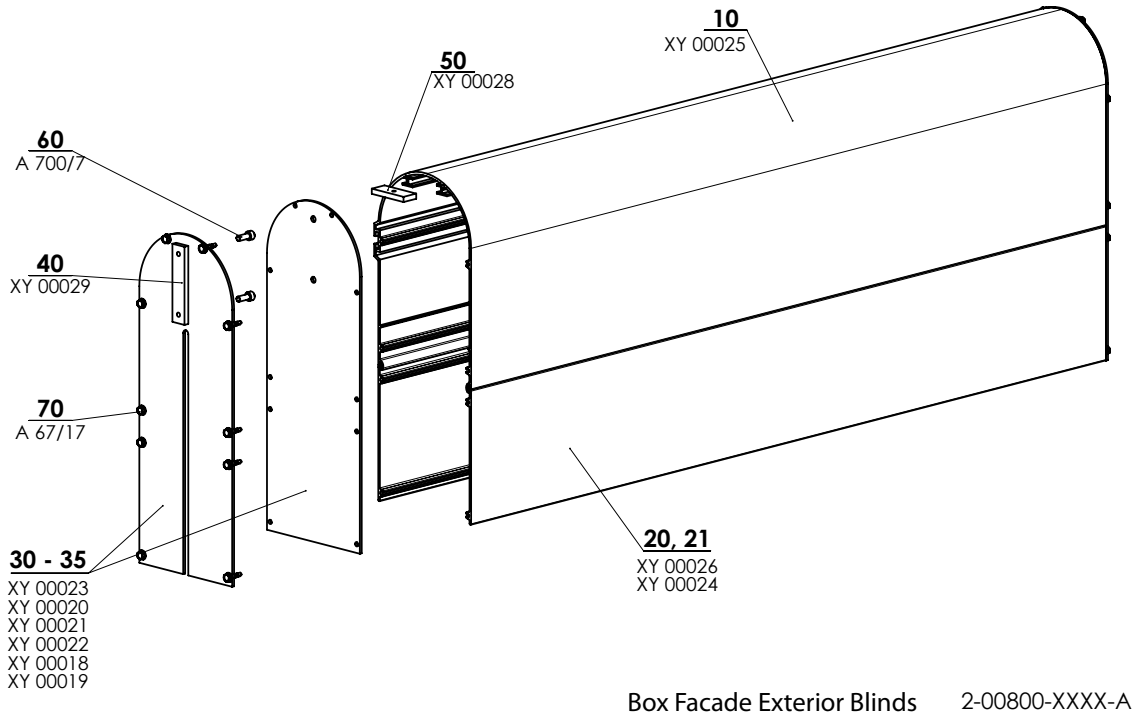

Box Facade Exterior Blinds 2-00800-XXXX-A

Box Facade Exterior Blinds (2-00800-0000)

Position	Item name	Business name - Abbreviation 2	Order number - Abbreviation 1
10	Round cover	XY 00025	7-300678-PU52
20	Round cover extension - 100mm	XY 00024	7-300671-PU52
21	Round cover extension - 160mm	XY 00026	7-300680-PU52
30	Side cap 240mm - without groove	XY 00023	3-02247-PU52
31	Side cap 332mm - without groove	XY 00020	3-02244-PU52
32	Side cap 392mm - without groove	XY 00021	3-02245-PU52
33	Side cap 240mm - with groove	XY 00022	3-02246-PU52
34	Side cap 332mm - with groove	XY 00018	3-02218-PU52
35	Side cap 392mm - with groove	XY 00019	3-02219-PU52
40	Cover fixation plate Fe/Zn	XY 00029	7-300685-PU22
50	Top fixation plate Fe/Zn	XY 00028	7-300684-PU22
60	Screw M6x16	A 700/7	6-010817-0000
70	Screw 4,8x19	A 67/17	6-010851-0000

Clipboard Extension

Box Extension

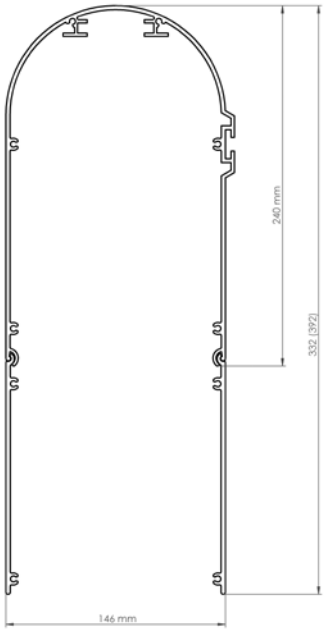

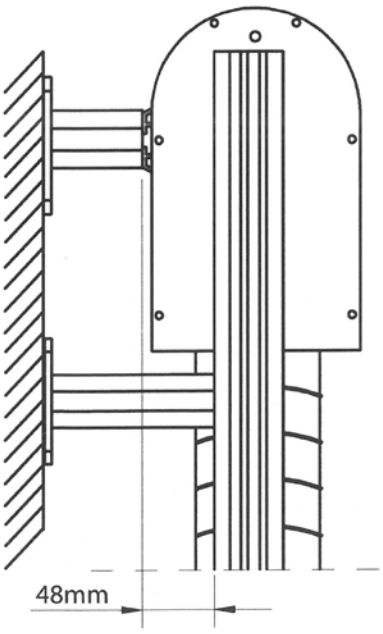

Head rail bracket in box

Head rail bracket mechanical (Fe)
P 002/30 (7-201893-0000)

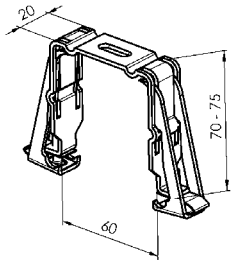

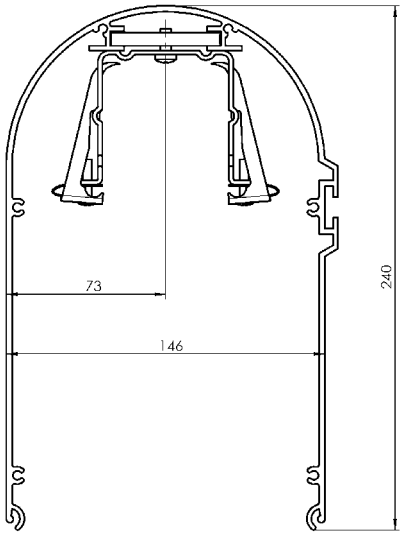

Holder of clipboard

Holder of guiding channel
(2-00799)

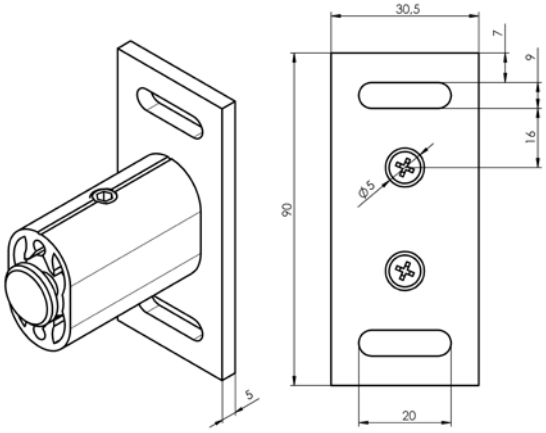

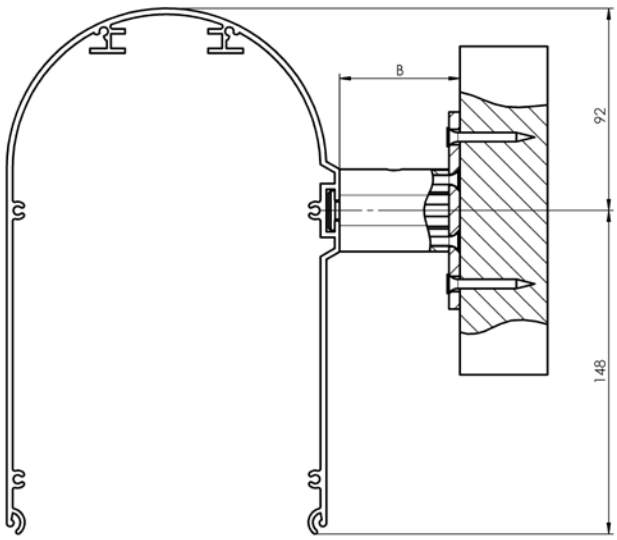

Guiding Channel

Single-Sided Round Channel P 018/7 (7-302154)

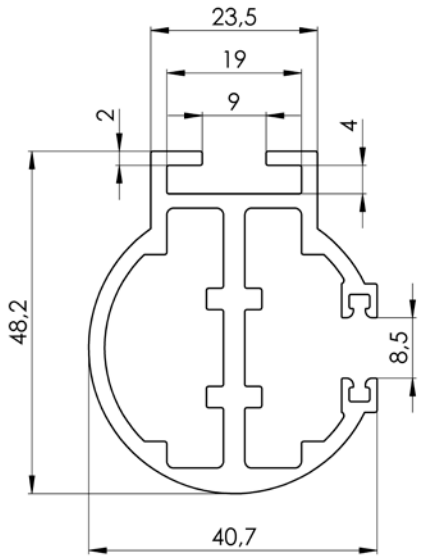

Double-Sided Round Guiding Channel P 017/7 (7-302155)

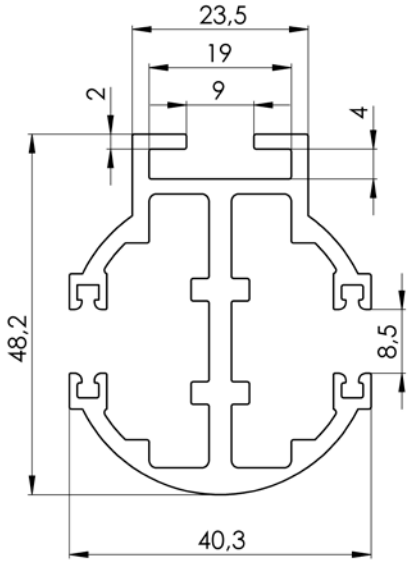

Guiding channel holder

Guiding channel holder
(2-00798)

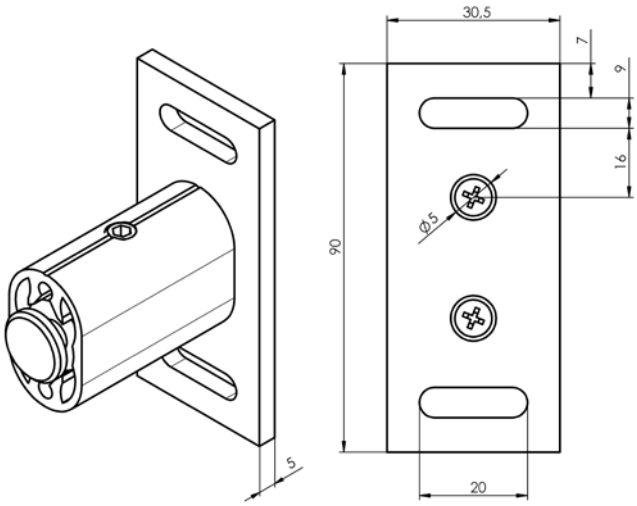

Guiding Channel attachment

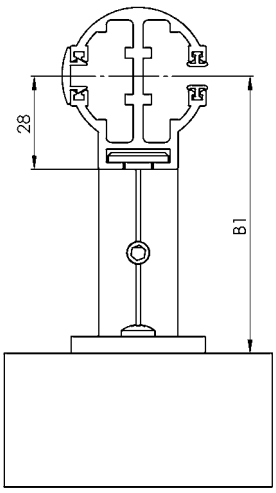

Variations of BOXES

T1	1 section, 1 guiding channel
T1+	1 section, 2 guiding channels
T2	2 sections, 3 guiding channels
T2+	2 sections, 2 guiding channels for each section
T3	3 sections, 4 guiding channels
T3+	3 sections, 2 guiding channels for each section
T4	4 sections, 5 guiding channels
T4+	4 sections, 2 guiding channels for each section
X	Other - consult your SR

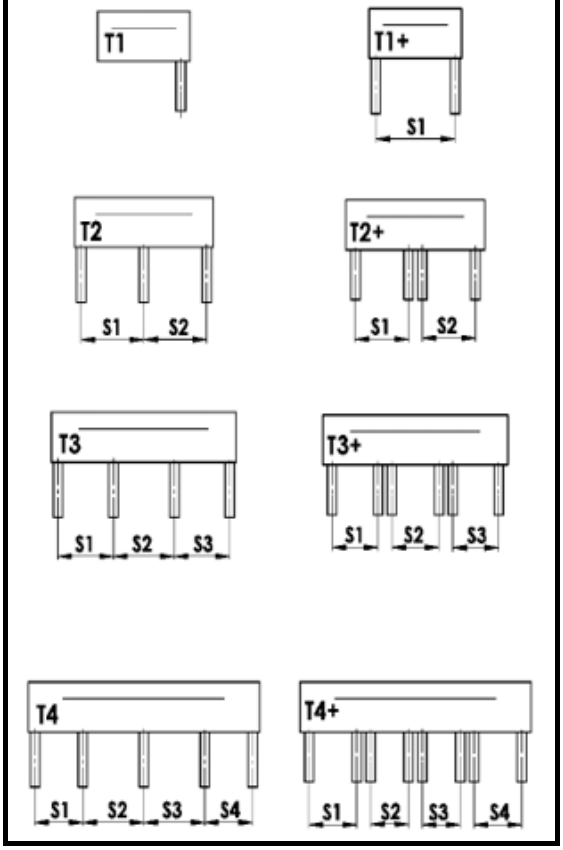

Placing of guiding channels

A	Outer guiding channels placed inside cover
B	Outer guiding channels placed outside cover
A/B	Outer guiding channels placed 1x inside and 1x outside cover
B/A	Outer guiding channels placed 1x inside and 1x outside cover

Position A/B and B/A - necessary to consult your SR.

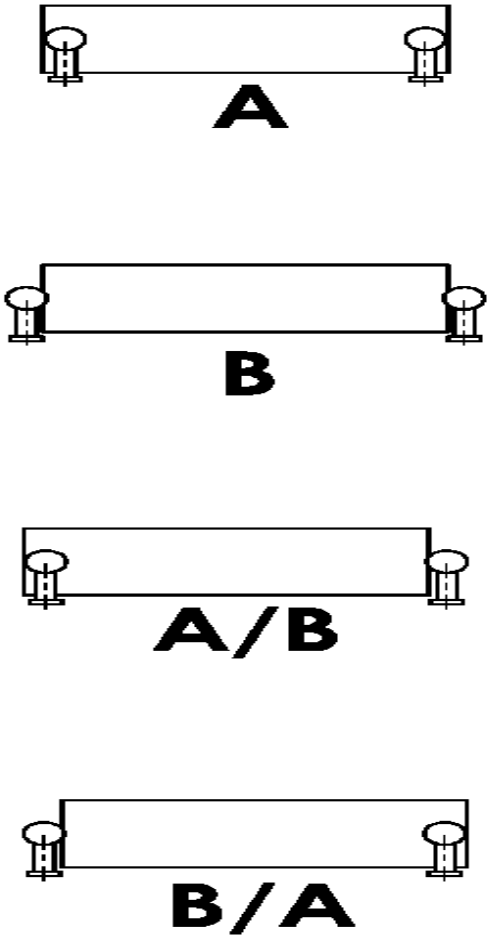

Installation A – guiding channels inside the cassette

One cover plate for more blinds. The guiding channels are installed inside the cassette.
The guiding rails are fitted with a rubber gasket. Every other slat is fitted with a guide.

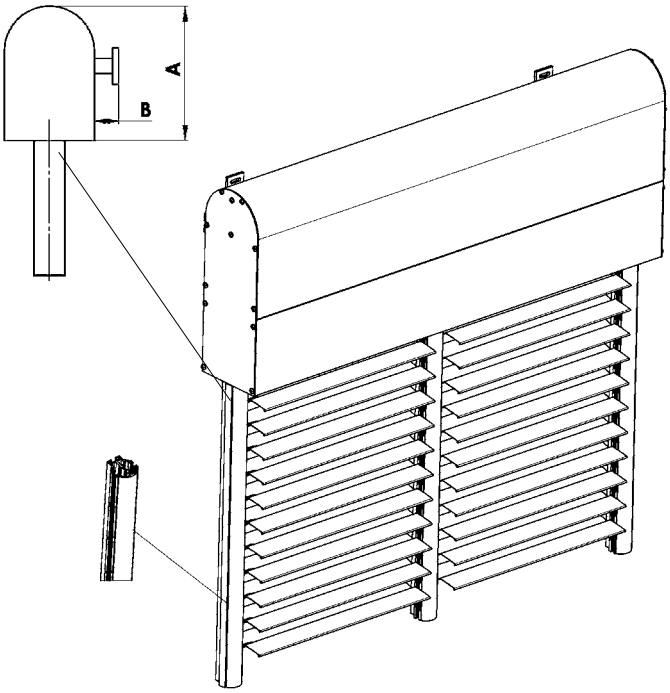

Installation B – guiding channels outside the cassette

The guiding channels constitute the bearing element.
The guiding rails with slots are fitted with a rubber gasket. Every other slat is fitted with a guide.

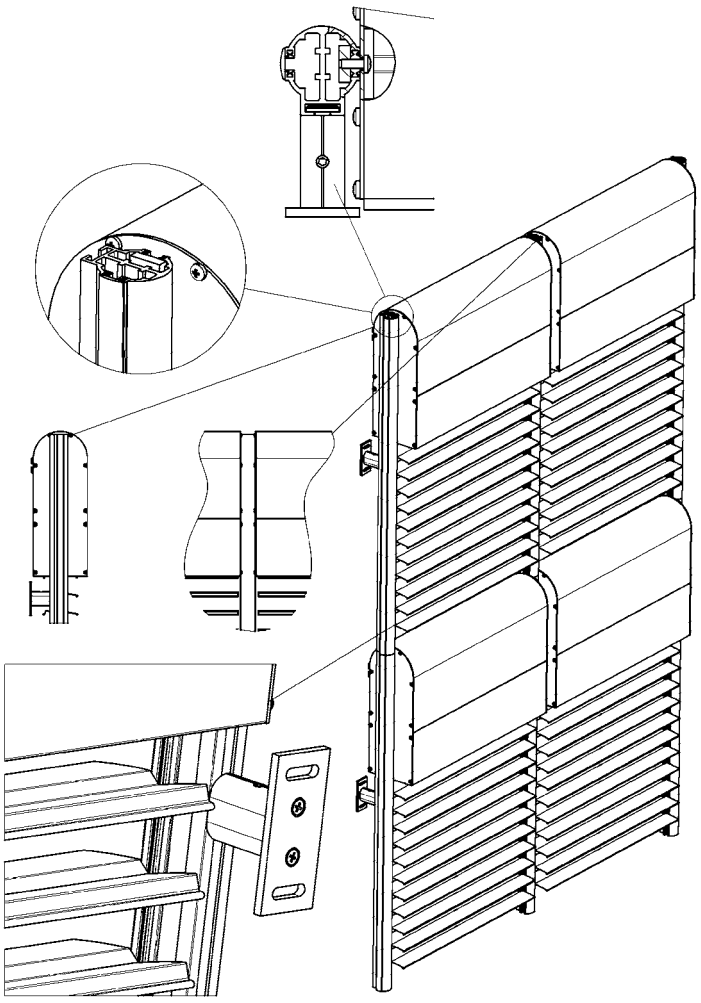

Lintel Exterior Blinds HELUZ

The bushings for the guiding channels can be recessed in an insulation sandwich. The Venetian blind guiding channels can also be fixed to a window frame using attachments.

Fitting of bushing of exterior blinds with recessed guiding channel – standard Installation

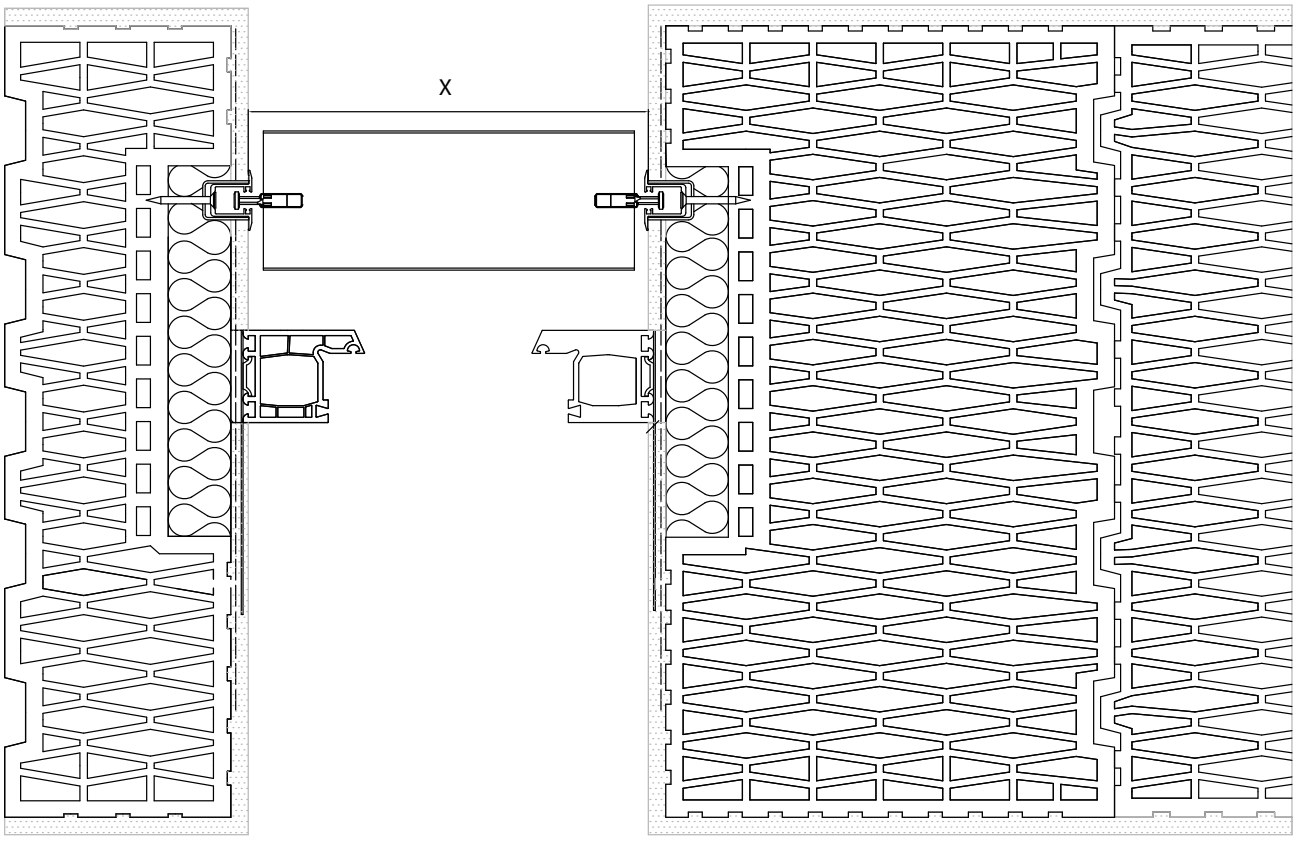

X -blind width

Fitting of Venetian blind guiding channel in reveal

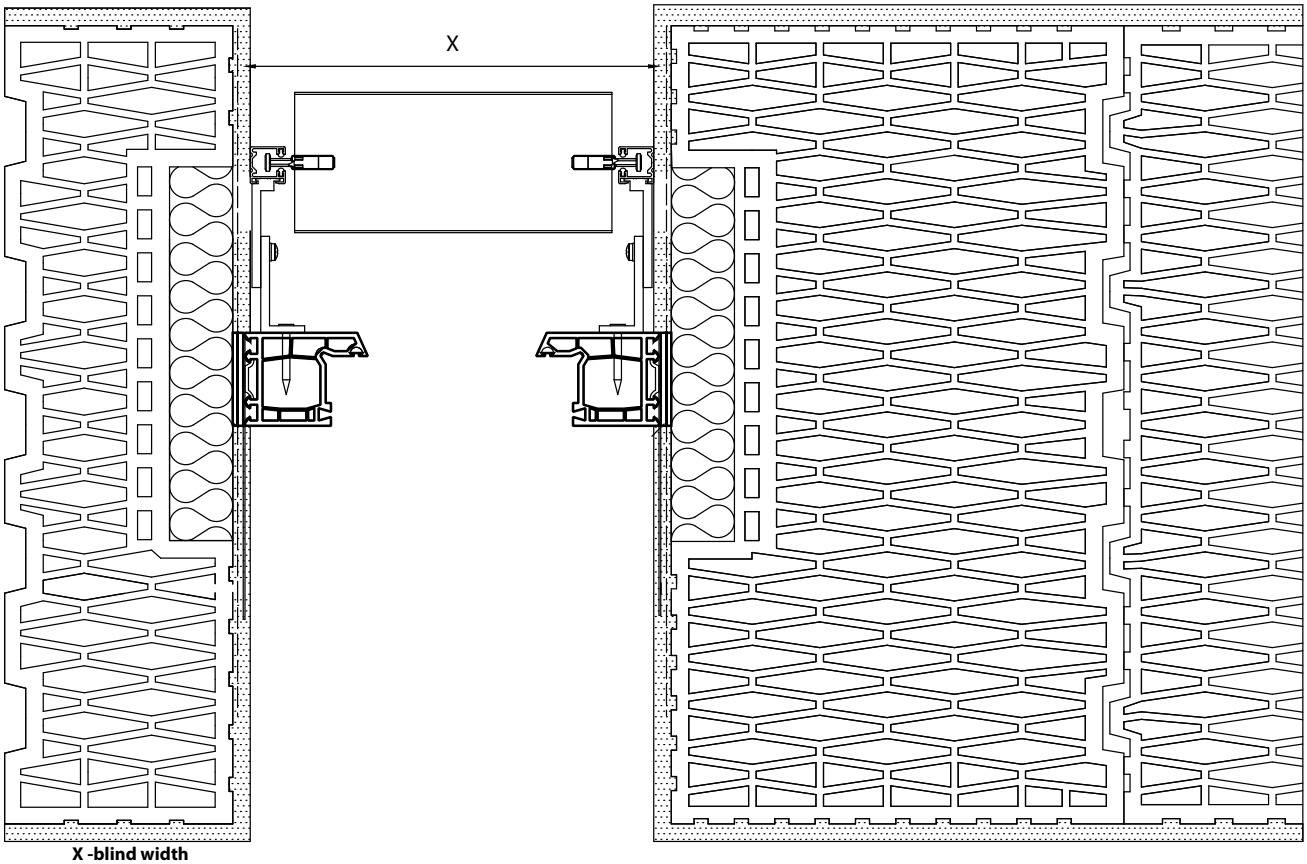

X -blind width

Fitting of window frame for exterior blind Installation

The window frame can be fixed to the rolling lintel in the upper part using metal attachments and dowels.

Distance between the outside brick molding of lintel and outside part of window frame is 220 mm.

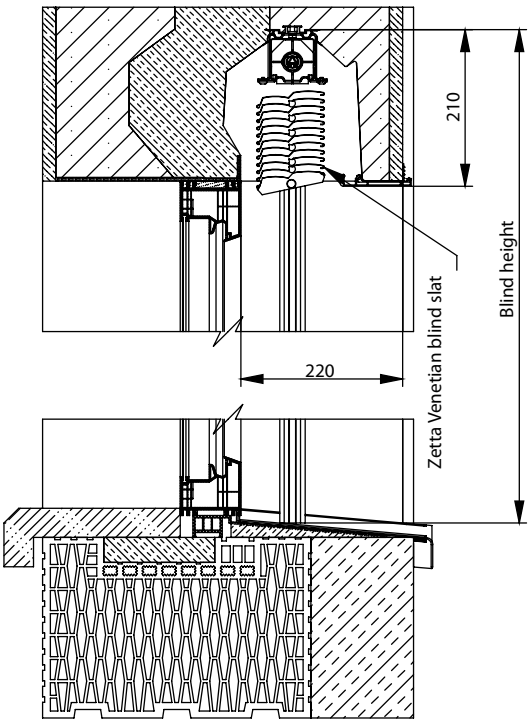

Věšák Fe pro Heluz P 002/31
(2-01688-0000)

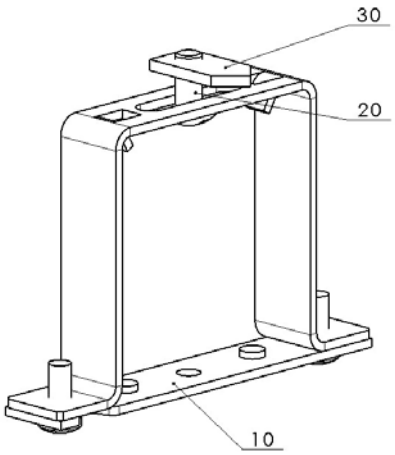

6-010579-0001 screw
6-006979-0000 nut



LINTEL EXTERIOR BLINDS

Blind Type / Parameter	Cetta 60 Flexi		Cetta 65	Cetta 80	Cetta 80 Flexi		Cetta 80 Slim	Cetta 100 Flexi		Setta 65	Setta 90	Zetta 70	Zetta 90
	Wire	Guiding Channel			Wire	Guiding Channel		Wire	Führungsschiene				
Min. Width (mm)	600	600	600	600	600	600	600	600	600	600	600	600	600
Max. Width (mm)	3850	3850	3850	3850	3850	3850	3850	3850	3850	3850	3850	3850	3850
Max. Height (mm)	3300	2100	1500	1700	4000	2800	2000	5500	3700	1400	1900	1600	1900
Max. Guaranteed Area	8 m² (Handle control) 8 m² (Motor control)												

Recessing of components for motor control

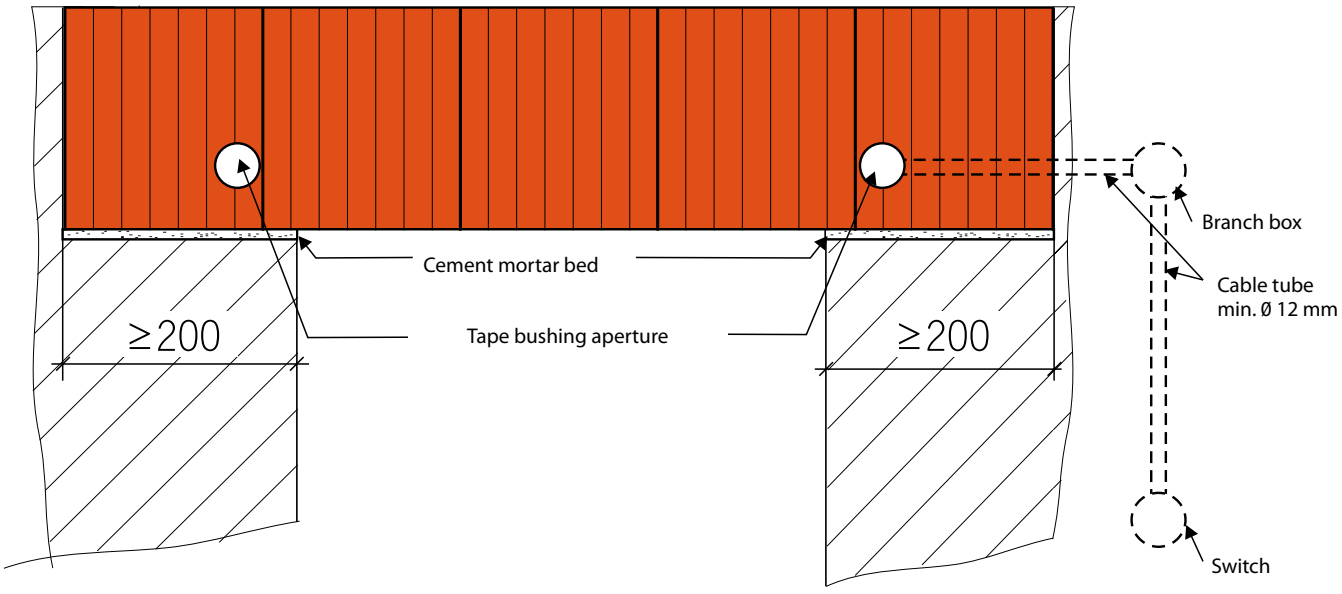

In the case of handle control, protrude the handle through the prepared aperture into the blind gearing. Then screw to the lintel.

Control

The bearing HELUZ roller blind lintel can be fitted either with manual or electric control.

If the customer decides for the manual control using a handle, it is necessary to keep the lintel seating of 200, rather 250 mm, if possible, on the control side. In the case of electrical control of the shading systems, a wiring branch box is to be installed next to the lintel and a cable with minimum of 3 wires with the section of 1.5 mm^2 for 230 V power supply will lead into it. The branch box with the cable tube with the a minimum diameter of 16 mm will be interconnected with the inner part of the lintel, eventually with a switch. The electrical drive is to be located in the Venetian blind carrier. The entire wiring system needs to be consulted with the shading equipment assembling company prior to applying the plastering.

When using the electrical control, we can place the lintel symmetrically on the assumption of keeping the minimum lintel seating of 200 mm on both sides.



Motor control

The handle bushing extends 15 mm in the space for later plastering.



Handle control

Blinds for HELUZ Family 3 in 1 Lintels

LINTEL CROSS-SECTION

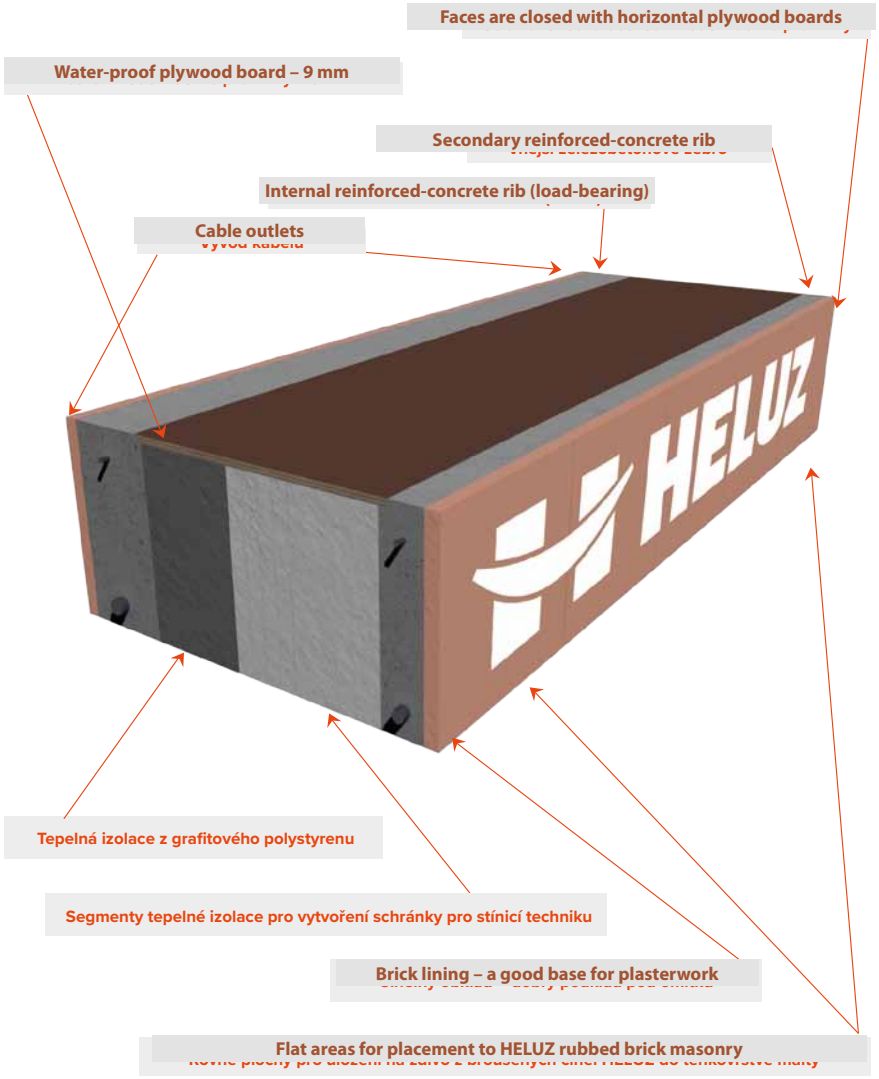

Position of windows for the individual variants of lintel depth

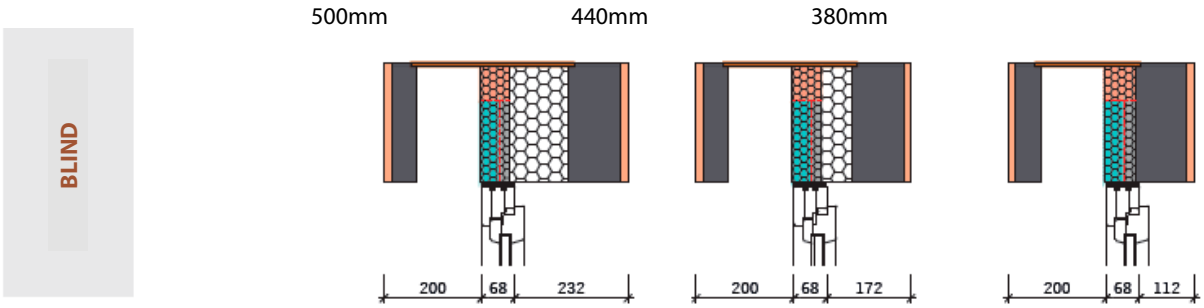

The universal position of the window is 260 mm measured from the exposed face of the lintel to the exposed face of the window frame for the lintel widths 500 mm and 440 mm. For the 380 mm lintel width, the universal position of the window is 240 mm from the exposed face of masonry. This position is intended for cases where installation of the shading technology has not been decided yet. If no solar shading is to be installed, the window frame may be shifted closer to the exposed face of masonry. It is always necessary to consider architectural appearance of the structure so that the windows are matched within the façade including the installation of the selected solar shading units. A small inner window sill will be necessary for lintels of 380 mm width. Therefore, this lintel width variant is suitable in connection with the 380 mm masonry width for the walls of structures like garages and garden houses, i.e., structures not subject to considerable architectural and thermal-technical requirements, but where solar shading is required. When installing the window, it is necessary to fit the window frame tight to the boundary of the thermal insulation segments for the specified type of solar shading.

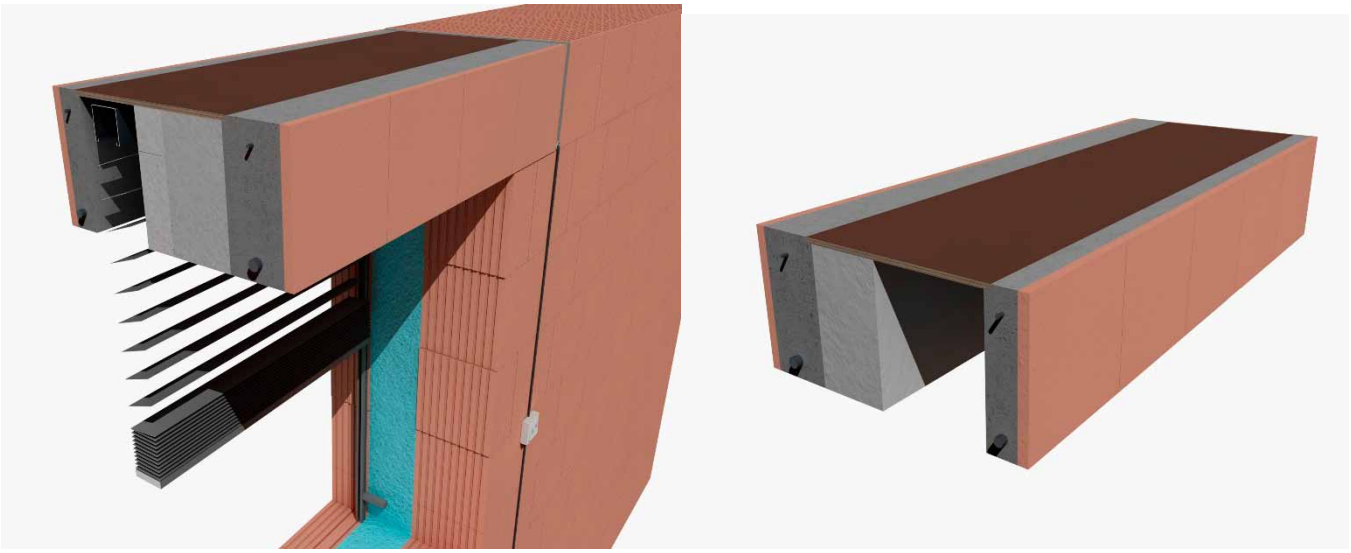

The blind is fitted in the lintel in clamps anchored in the upper water-proof plywood board.

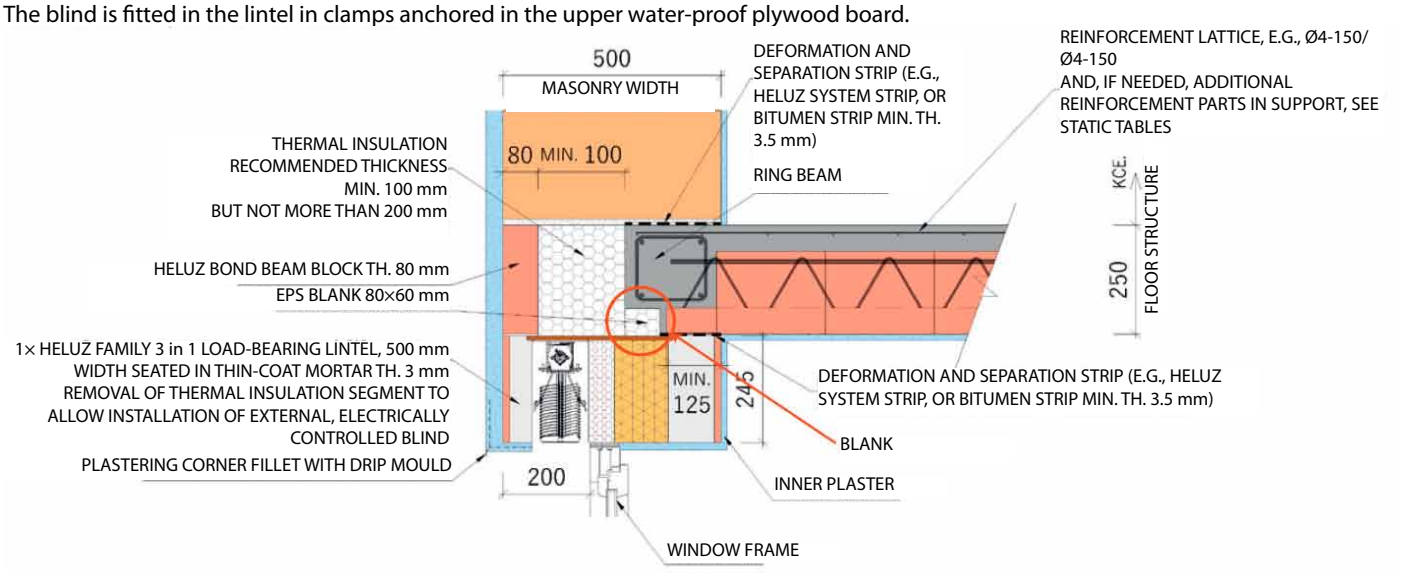

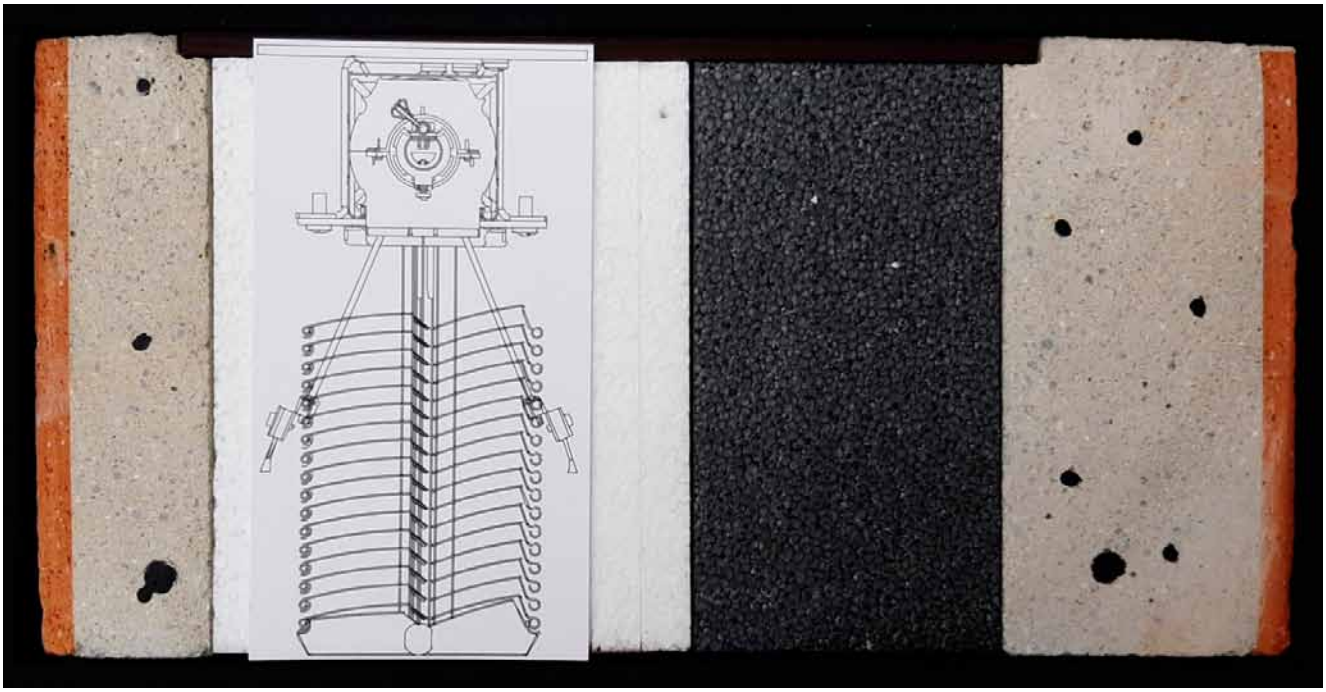

	TYPE	Overall height of shading product	Window aperture height
BLIND	Cetta 100 flexi - lanko	4 000	3 765
	Cetta 80 flexi - lanko	4 000	3 765
	Cetta 80 flexi - vodící lišta	4 000	3 765
	Cetta 60 flexi - lanko	3 500	3 265
	Cetta 100 flexi - vodící lišta	3 400	3 165
	Cetta 50 - lanko	3 000	2 765
	Cetta 60 flexi - vodící lišta	2 200	1965
	Cetta 80 slim	2 100	1865
	Setta 90	2 000	1765
	Zetta 90	2 100	1865
	Cetta 80	1 800	1 565
	Zetta 70	1 600	1 365
	Cetta 65	1 500	1 265
	Setta 65	1 500	1 265
	Titan	1 400	1165
	Cetta 50 - vodící lišta	1 100	870

BRICK TH. 500 MM – ELECTRIC CONTROLS
CROSS-SECTION OF WINDOW APERTURE

BLIND

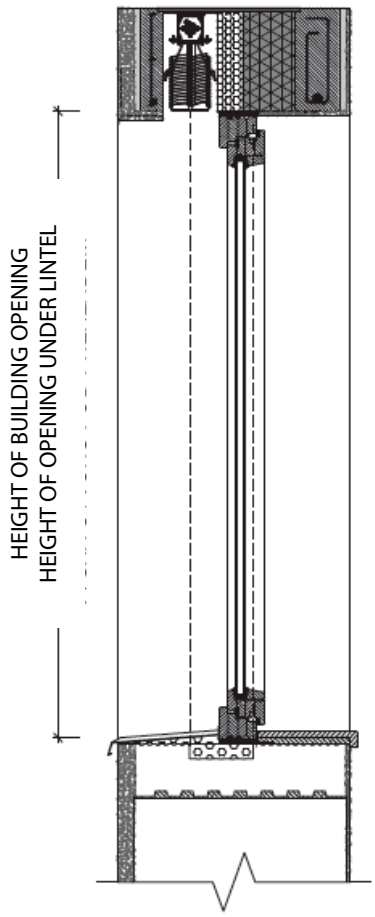

ISOTRA a.s.

Bílovecká 2411/1, 746 01 Opava
Czech Republic

Tel.: **+420 553 685 111**
E-mail: isotra@isotra.com

www.isotra.com

Released: 11/2026

ISOTRA Partner

... protecting your privacy.